Airwell

Just feel well

Service Manual

LIGHT COMMERCIAL INVERTER SERIES
LCAC R32
English Manual

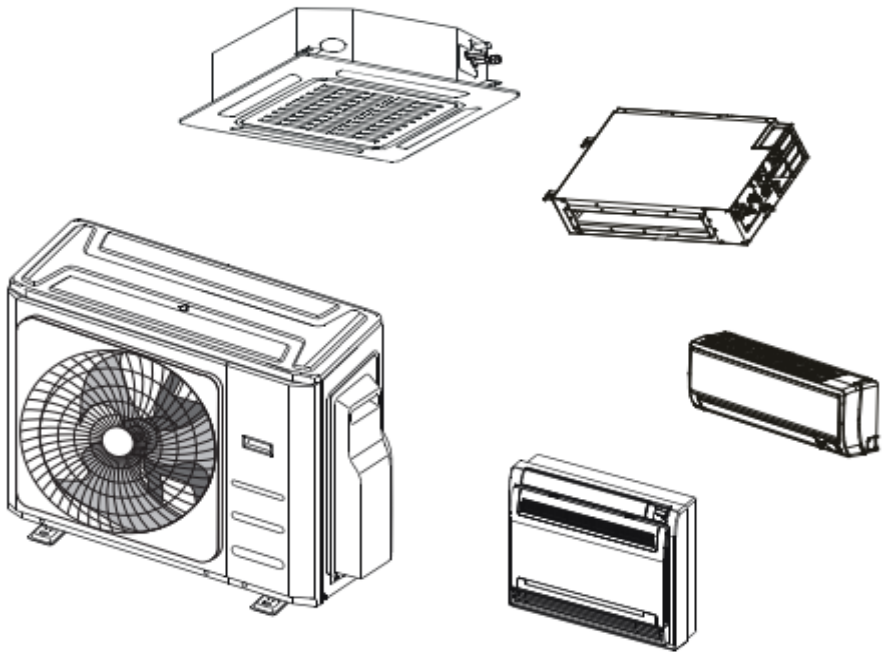

IMPORTANT NOTE:
Read this manual carefully before installing or operating your new air conditioning unit. Make sure to save this manual for future reference.

21.AW.LCAC-INV.035-175.R32.SM.EN.10.18.Rev01

Table of Contents

§. Safety Precautions

1. Precautions
2. Information servicing

§. Model Reference & External Appearance

1. Model Reference
2. External Appearance

§. Indoor Unit

1. Indoor Unit - Console Type
2. Indoor Unit - Compact Four-way Cassette Type
3. Indoor Unit - Super Slim Four-way Cassette Type
4. Indoor Unit - A6 Duct Type
5. Indoor Unit - Floor Ceiling Type

§. Outdoor Unit

1. Dimensional Drawings
2. Service Space
3. Capacity Correction Factor for Height Difference
4. Noise Criterion Curves
5. Refrigerant Cycle Diagrams
6. Electrical Wiring Diagrams

§. Installation

§. Maintenance

§. Product Features

Table of Contents

§. Troubleshooting

1. Safety Caution
2. General Troubleshooting
3. Information Inquiry
4. Error Diagnosis and Troubleshooting Without Error Code
5. Quick Maintenance by Error Code
6. Troubleshooting by Error Code
7. Check Procedures

§. Indoor Unit Disassembly

1. Indoor Unit - Console Type
2. Indoor Unit - Compact Four-way Cassette Type
3. Indoor Unit - Super Slim Four-way Cassette Type
4. Indoor Unit - A6 Duct Type
5. Indoor Unit - Floor Ceiling Type

§. Outdoor Unit Disassembly

Appendix

i) Temperature Sensor Resistance Value Table for T1,T2,T3 and T4 (°C – K)

ii) Temperature Sensor Resistance Value Table for TP(for some units) (°C – K)

iii) Pressure On Service Port



Caution: Risk of fire (Required for R32/R290 units only)

Safety Precautions

Contents

1. Precautions.....2
2. Information servicing(For flammable materials).....3

1. Precautions

To prevent personal injury, or property or unit damage, adhere to all precautionary measures and instructions outlined in this manual. Before servicing a unit, refer to this service manual and its relevant sections.

Failure to adhere to all precautionary measures listed in this section may result in personal injury, damage to the unit or to property, or in extreme cases, death.

WARNING indicates a potentially hazardous situation which if not avoided could result in serious personal injury, or death.

CAUTION indicates a potentially hazardous situation which if not avoided could result in minor or moderate personal injury, or unit damage.

1.1 In case of Accidents or Emergency

WARNING

- If a gas leak is suspected, immediately turn off the gas and ventilate the area if a gas leak is suspected before turning the unit on.
- If strange sounds or smoke is detected from the unit, turn the breaker off and disconnect the power supply cable.
- If the unit comes into contact with liquid, contact an authorized service center.
- If liquid from the batteries makes contact with skin or clothing, immediately rinse or wash the area well with clean water.
- Do not insert hands or other objects into the air inlet or outlet while the unit is plugged in.
- Do not operate the unit with wet hands.
- Do not use a remote controller that has previously been exposed to battery damage or battery leakage.

CAUTION

- Clean and ventilate the unit at regular intervals when operating it near a stove or near similar devices.
- Do not use the unit during severe weather conditions. If possible, remove the product from the window before such occurrences.

1.2 Pre-Installation and Installation

WARNING

- Use this unit only on a dedicated circuit.
- Damage to the installation area could cause the unit to fall, potentially resulting in personal injury, property damage, or product failure.
- Only qualified personnel should disassemble, install, remove, or repair the unit.
- Only a qualified electrician should perform electrical work. For more information, contact your dealer, seller, or an authorized service center.

CAUTION

- While unpacking be careful of sharp edges around the unit as well as the edges of the fins on the condenser and evaporator.

1.3 Operation and Maintenance

WARNING

- Do not use defective or under-rated circuit breakers.
- Ensure the unit is properly grounded and that a dedicated circuit and breaker are installed.
- Do not modify or extend the power cable. Ensure the power cable is secure and not damaged during operation.
- Do not unplug the power supply plug during operation.
- Do not store or use flammable materials near the unit.
- Do not open the inlet grill of the unit during operation.
- Do not touch the electrostatic filter if the unit is equipped with one.
- Do not block the inlet or outlet of air flow to the unit.
- Do not use harsh detergents, solvents, or similar items to clean the unit. Use a soft cloth for cleaning.
- Do not touch the metal parts of the unit when removing the air filter as they are very sharp.
- Do not step on or place anything on the unit or outdoor units.
- Do not drink water drained from the unit
- Avoid direct skin contact with water drained from the unit.
- Use a firm stool or step ladder according to manufacturer procedures when cleaning or maintaining the unit.

CAUTION

- Do not install or operate the unit for an extended period of time in areas of high humidity or in an environment directly exposing it to sea wind or salt spray.
- Do not install the unit on a defective or damaged installation stand, or in an unsecure location.
- Ensure the unit is installed at a level position
- Do not install the unit where noise or air discharge created by the outdoor unit will negatively impact the environment or nearby residences.
- Do not expose skin directly to the air discharged by the unit for prolonged periods of time.
- Ensure the unit operates in areas water or other liquids.
- Ensure the drain hose is installed correctly to ensure proper water drainage.
- When lifting or transporting the unit, it is recommended that two or more people are used for this task.
- When the unit is not to be used for an extended time, disconnect the power supply or turn off the breaker.

2. Information servicing(For flammable materials)

2.1 Checks to the area

- Prior to beginning work on systems containing flammable refrigerants, safety checks are necessary to ensure that the risk of ignition is minimized.
- For repair to the refrigerating system, the following precautions shall be complied with prior to conducting work on the system.

2.2 Work procedure

- Work shall be undertaken under a controlled procedure so as to minimise the risk of a flammable gas or vapour being present while the work is being performed.

2.3 Work procedure

- All maintenance staff and others working in the local area shall be instructed on the nature of work being carried out.
- Work in confined spaces shall be avoided.
- The area around the work space shall be sectioned off. Ensure that the conditions within the area have been made safe by control of flammable material.

2.4 Checking for presence of refrigerant

- The area shall be checked with an appropriate refrigerant detector prior to and during work, to ensure the technician is aware of potentially flammable atmospheres.
- Ensure that the leak detection equipment being used is suitable for use with flammable refrigerants, i.e. no sparking, adequately sealed or intrinsically safe.

2.5 Presence of fire extinguisher

- If any hot work is to be conducted on the refrigeration equipment or any associated parts, appropriate fire extinguishing equipment shall be available to hand.
- Have a dry powder or CO2 fire extinguisher adjacent to the charging area.

2.6 No ignition sources

- No person carrying out work in relation to a refrigeration system which involves exposing any pipe work that contains or has contained flammable refrigerant shall use any sources of ignition in such a manner that it may lead to the risk of fire or explosion.
- All possible ignition sources, including cigarette smoking, should be kept sufficiently far away from the site of installation, repairing, removing and disposal, during which flammable refrigerant can possibly be released to the surrounding space.
- Prior to work taking place, the area around the equipment is to be surveyed to make sure that there are no flammable hazards or ignition risks.
- NO SMOKING signs shall be displayed.

2.7 Ventilated area

- Ensure that the area is in the open or that it is adequately ventilated before breaking into the system or conducting any hot work. A degree of ventilation shall continue during the period that the work is carried out. The ventilation should safely disperse any released refrigerant and preferably expel it externally into the atmosphere.

2.8 Checks to the refrigeration equipment

- Where electrical components are being changed, they shall be fit for the purpose and to the correct specification. At all times the manufacturer's maintenance and service guidelines shall be followed. If in doubt consult the manufacturer's technical department for assistance. The following checks shall be applied to installations using flammable refrigerants:
  - the charge size is in accordance with the room size within which the refrigerant containing parts are installed;
  - the ventilation machinery and outlets are operating adequately and are not obstructed;
  - if an indirect refrigerating circuit is being used, the secondary circuit shall be checked for the presence of refrigerant; marking to the equipment continues to be visible and legible.
  - markings and signs that are illegible shall be corrected;
  - refrigeration pipe or components are installed in a position where they are unlikely to be exposed to any substance which may corrode refrigerant containing components, unless the components are constructed of materials which are inherently resistant to being corroded or are suitably protected against being so corroded.

2.9 Checks to electrical devices

- Repair and maintenance to electrical components shall include initial safety checks and component inspection procedures. If a fault exists that could compromise safety, then no electrical supply shall be connected to the circuit until it is satisfactorily dealt with. If the fault cannot be corrected immediately but it is necessary to continue operation, an adequate temporary solution shall be used. This shall be reported to the owner of the equipment so all parties are advised. Initial safety checks shall include:

- that capacitors are discharged: this shall be done in a safe manner to avoid possibility of sparking;
- that there no live electrical components and wiring are exposed while charging, recovering or purging the system;
- that there is continuity of earth bonding.

2.10 Repairs to sealed components

- During repairs to sealed components, all electrical supplies shall be disconnected from the equipment being worked upon prior to any removal of sealed covers, etc. If it is absolutely necessary to have an electrical supply to equipment during servicing, then a permanently operating form of leak detection shall be located at the most critical point to warn of a potentially hazardous situation.
- Particular attention shall be paid to the following to ensure that by working on electrical components, the casing is not altered in such a way that the level of protection is affected. This shall include damage to cables, excessive number of connections, terminals not made to original specification, damage to seals, incorrect fitting of glands, etc.
  - Ensure that apparatus is mounted securely.
  - Ensure that seals or sealing materials have not degraded such that they no longer serve the purpose of preventing the ingress of flammable atmospheres. Replacement parts shall be in accordance with the manufacturer's specifications.

NOTE: The use of silicon sealant may inhibit the effectiveness of some types of leak detection equipment. Intrinsically safe components do not have to be isolated prior to working on them.

2.11 Repair to intrinsically safe components

- Do not apply any permanent inductive or capacitance loads to the circuit without ensuring that this will not exceed the permissible voltage and current permitted for the equipment in use. Intrinsically safe components are the only types that can be worked on while live in the presence of a flammable atmosphere. The test apparatus shall be at the correct rating.
- Replace components only with parts specified by the manufacturer. Other parts may result in the ignition of refrigerant in the atmosphere from a leak.

2.12 Cabling

- Check that cabling will not be subject to wear, corrosion, excessive pressure, vibration, sharp edges or any other adverse environmental effects. The check shall also take into account the effects of aging or continual vibration from sources such as compressors or fans.

2.13 Detection of flammable refrigerants

- Under no circumstances shall potential sources of ignition be used in the searching for or detection of refrigerant leaks. A halide torch (or any other detector using a naked flame) shall not be used.

2.14 Leak detection methods

- The following leak detection methods are deemed acceptable for systems containing flammable refrigerants. Electronic leak detectors shall be used to detect flammable refrigerants, but the sensitivity may not be adequate, or may need re-calibration. (Detection equipment shall be calibrated in a refrigerant-free area.) Ensure that the detector is not a potential source of ignition and is suitable for the refrigerant used. Leak detection equipment shall be set at a percentage of the LFL of the refrigerant and shall be calibrated to the refrigerant employed and the appropriate percentage of gas (25 % maximum) is confirmed. Leak detection fluids are suitable for use with most refrigerants but the use of detergents containing chlorine shall be avoided as the chlorine may react with the refrigerant and corrode the copper pipe-work.
  - If a leak is suspected, all naked flames shall be removed or extinguished.
  - If a leakage of refrigerant is found which requires brazing, all of the refrigerant shall be recovered from the system, or isolated (by means of shut off valves) in a part of the systemremote from the leak. Oxygen free nitrogen (OFN) shall then be purged through the system both before and during the brazing process.

2.15 Removal and evacuation

- When breaking into the refrigerant circuit to make repairs or for any other purpose, conventional procedures shall be used. However, it is important that best practice is followed since flammability is a consideration.
- The following procedure shall be adhered to:
  - remove refrigerant;
  - purge the circuit with inert gas;
  - evacuate;
  - purge again with inert gas;
  - open the circuit by cutting or brazing.

- The refrigerant charge shall be recovered into the correct recovery cylinders. The system shall be flushed with OFN to render the unit safe. This process may need to be repeated several times. Compressed air or oxygen shall not be used for this task. Flushing shall be achieved by breaking the vacuum in the system with OFN and continuing to fill until the working pressure is achieved, then venting to atmosphere, and finally pulling down to a vacuum. This process shall be repeated until no refrigerant is within the system. When the final OFN charge is used, the system shall be vented down to atmospheric pressure to enable work to take place. This operation is absolutely vital if brazing operations on the pipe-work are to take place.
- Ensure that the outlet for the vacuum pump is not close to any ignition sources and there is ventilation available.

2.16 Charging procedures

- In addition to conventional charging procedures, the following requirements shall be followed:
  - Ensure that contamination of different refrigerants does not occur when using charging equipment. Hoses or lines shall be as short as possible to minimize the amount of refrigerant contained in them.
  - Cylinders shall be kept upright.
  - Ensure that the refrigeration system is earthed prior to charging the system with refrigerant.
  - Label the system when charging is complete (if not already).
  - Extreme care shall be taken not to overfill the refrigeration system.
  - Prior to recharging the system it shall be pressure tested with OFN. The system shall be leak tested on completion of charging but prior to commissioning. A follow up leak test shall be carried out prior to leaving the site.

2.17 Decommissioning

Before carrying out this procedure, it is essential that the technician is completely familiar with the equipment and all its detail. It is recommended good practice that all refrigerants are recovered safely. Prior to the task being carried out, an oil and refrigerant sample shall be taken.

In case analysis is required prior to re-use of reclaimed refrigerant. It is essential that electrical power is available before the task is commenced.

- Become familiar with the equipment and its operation.
- Isolate system electrically.
- Before attempting the procedure ensure that:
  - mechanical handling equipment is available, if required, for handling refrigerant cylinders;
  - all personal protective equipment is available and being used correctly;
  - the recovery process is supervised at all times by a competent person;
  - recovery equipment and cylinders conform to the appropriate standards.
- Pump down refrigerant system, if possible.
- If a vacuum is not possible, make a manifold so that refrigerant can be removed from various parts of the system.
- Make sure that cylinder is situated on the scales before recovery takes place.
- Start the recovery machine and operate in accordance with manufacturer's instructions.
- Do not overfill cylinders. (No more than 80 % volume liquid charge).
- Do not exceed the maximum working pressure of the cylinder, even temporarily.
- When the cylinders have been filled correctly and the process completed, make sure that the cylinders and the equipment are removed from site promptly and all isolation valves on the equipment are closed off.
- Recovered refrigerant shall not be charged into another refrigeration system unless it has been cleaned and checked.

2.18 Labelling

- Equipment shall be labelled stating that it has been de-commissioned and emptied of
- refrigerant. The label shall be dated and signed. Ensure that there are labels on the equipment stating the equipment contains flammable refrigerant.

2.19 Recovery

- When removing refrigerant from a system, either for servicing or decommissioning, it is recommended good practice that all refrigerants are removed safely.
- When transferring refrigerant into cylinders, ensure that only appropriate refrigerant recovery cylinders are employed. Ensure that the correct numbers of cylinders for holding the total system charge are available. All cylinders to be used are designated for the recovered refrigerant and labelled for that refrigerant (i.e. special cylinders for the recovery of refrigerant). Cylinders shall be complete with pressure relief valve and associated shut-off valves in good working order.

- Empty recovery cylinders are evacuated and, if possible, cooled before recovery occurs.
- The recovery equipment shall be in good working order with a set of instructions concerning the equipment that is at hand and shall be suitable for the recovery of flammable refrigerants. In addition, a set of calibrated weighing scales shall be available and in good working order.
- Hoses shall be complete with leak-free disconnect couplings and in good condition. Before using the recovery machine, check that it is in satisfactory working order, has been properly maintained and that any associated electrical components are sealed to prevent ignition in the event of a refrigerant release. Consult manufacturer if in doubt.
- The recovered refrigerant shall be returned to the refrigerant supplier in the correct recovery cylinder, and the relevant Waste Transfer Note arranged. Do not mix refrigerants in recovery units and especially not in cylinders.
- If compressors or compressor oils are to be removed, ensure that they have been evacuated to an acceptable level to make certain that flammable refrigerant does not remain within the lubricant. The evacuation process shall be carried out prior to returning the compressor to the suppliers. Only electric heating to the compressor body shall be employed to accelerate this process. When oil is drained from a system, it shall be carried out safely.

Model Reference

Contents

1. Model Reference.....2
2 External Appearance.....3

1. Model Reference

Refer to the following table to determine the specific indoor and outdoor unit model number of your purchased equipment.

Note: There are two versions of the 36k. Check you are using the right power supply for your model. Power Supply Intake : Outdoor Units

Indoor Unit Model		Universal Outdoor Unit Model	Capacity (Btu/h)	Power Supply
Cassette	CDMX-035N-09M25	YDAX-035H-09M25	12k	1Φ, 220-240V~, 50Hz
A6 Duct	DDMX-035N-09M25			
Console	XDMX-035N-09M25			
Cassette	CDMX-050N-09M25	YDAX-050H-09M25	18k	1Φ, 220-240V~, 50Hz
A6 Duct	DDMX-050N-09M25			
Floor Ceiling	FDMX-050N-09M25			
Console	XDMX-050N-09M25			
Cassette	CDMX-070N-09M25	YDAX-070H-09M25	24k	1Φ, 220-240V~, 50Hz
A6 Duct	DDMX-070N-09M25			
Floor Ceiling	FDMX-070N-09M25			
Cassette	CDMX-100N-09M25	YDAX-100H-09M25	36k	1Φ, 220-240V~, 50Hz
A6 Duct	DDMX-100N-09M25			
Floor Ceiling	FDMX-100N-09M25			
A6 Duct	DDMX-100N-09M25	YDAX-100H-09T35	36k	3Φ, 380-415V~, 50Hz
Floor Ceiling	FDMX-100N-09M25			
Cassette	CDMX-140N-09M25	YDAX-140H-09T35	48k	3Φ, 380-415V~, 50Hz
A6 Duct	DDMX-140N-09M25			
Floor Ceiling	FDMX-140N-09M25			
A6 Duct	DDMX-175N-09M25	YDAX-140H-09T35	55k	3Φ, 380-415V~, 50Hz
Floor Ceiling	FDMX-175N-09M25			

2. External Appearance

2.1 Indoor Unit

Compact Four-way Cassette	Super Slim Four-way Cassette
	
Ceiling &floor(Floor installation)	**Ceiling &floor(Ceiling installation)**
	
A6 Duct	**Console**
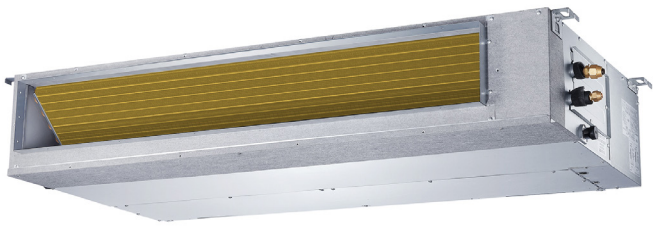	

2.2 Outdoor Unit

Single Fan Outdoor Unit	Double Fan Outdoor Unit
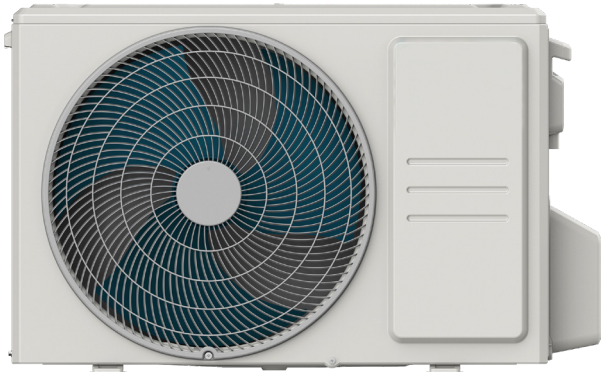	

Indoor Unit-Console

Contents

1. Feature....2
2. Dimensional Drawings....3
3. Part names....4
4. Service Place....4
5. Accessories....5
6 Air Velocity and Temperature Distributions....6
7. Capacity Tables....7
8. Noise Criterion Curves....13
9. Electrical Characteristics....14
10. Electrical Wiring Diagrams....14

1. Feature

1.1 Stylish Design

- The modern and elegant appearance is harmonious with your living space.

1.2 Two air outlets, four air inlets

- 2 Direction of air flow can be in two patterns: Both up and down or up only.



- Air inlet from 4 directions.



1.3 Quiet Design

- Advanced unique large centrifugal fan blade eliminates unnecessary noise and allows for smooth operation.



2. Dimensional Drawings

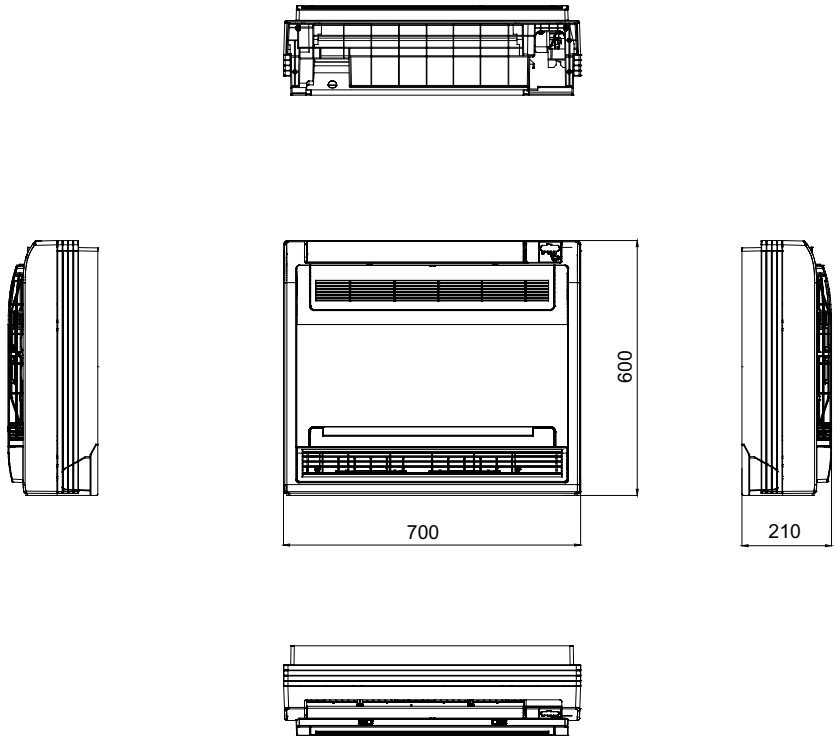

3. Part names

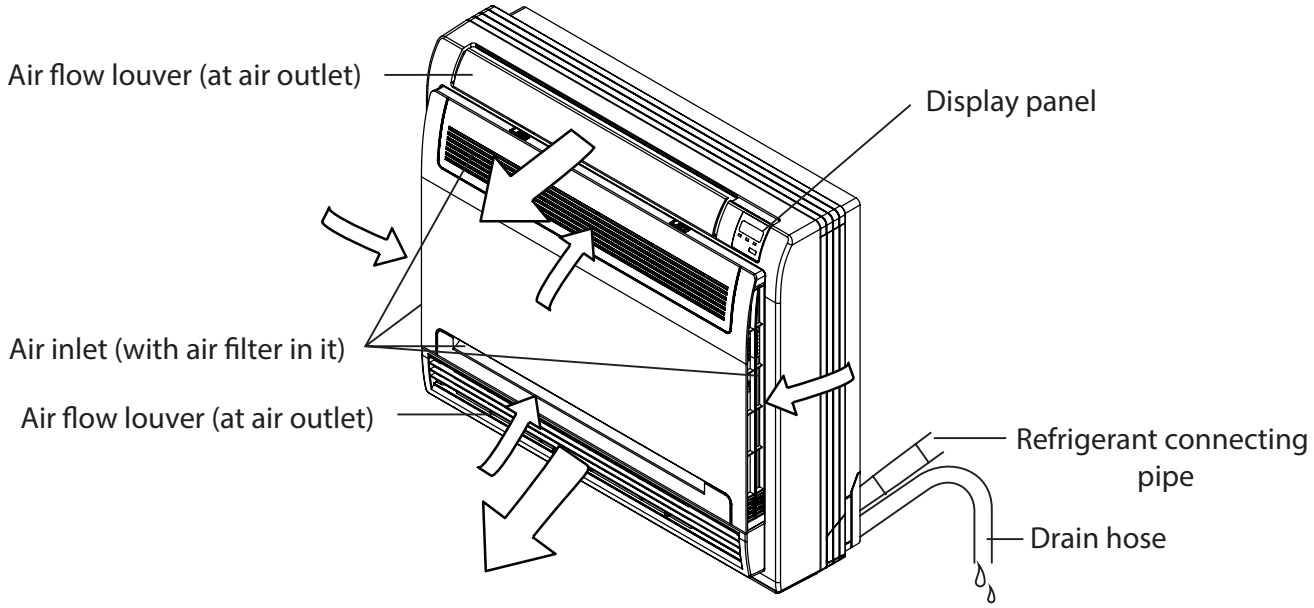

4. Service Place

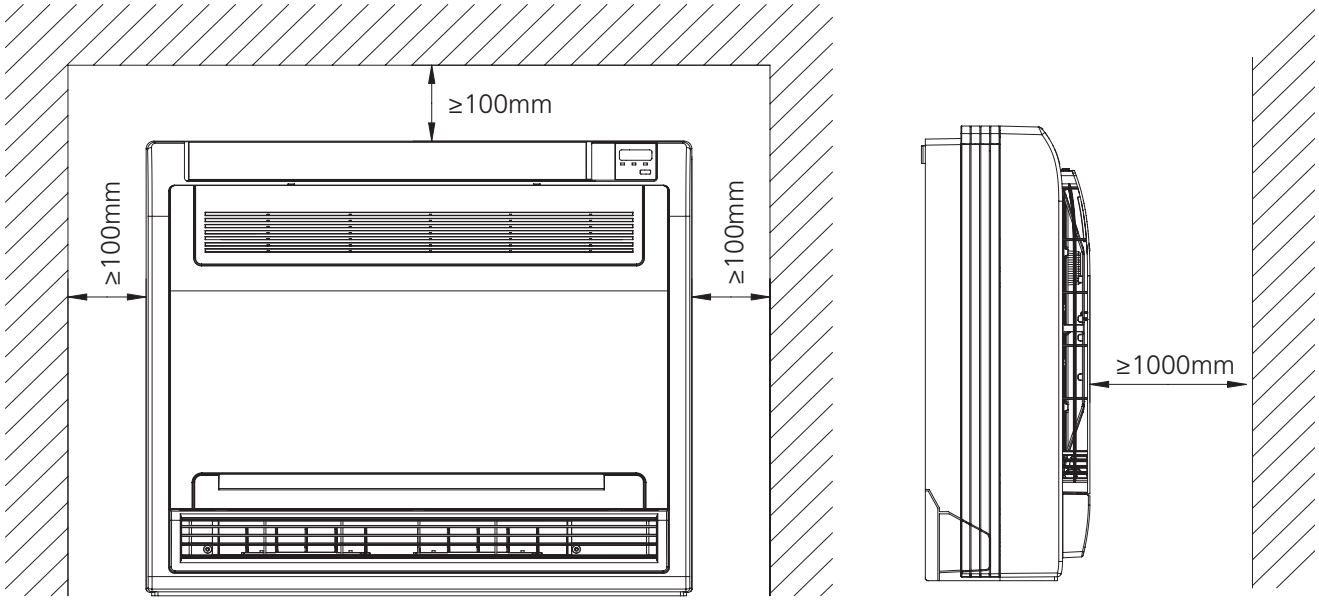

5. Accessories

The air conditioning system comes with the following accessories. Use all of the installation parts and accessories to install the air conditioner. Improper installation may result in water leakage, electrical shock and fire, or equipment failure.

	Name	Shape	Quantity
Refrigeration Fittings	Soundproof/insulation sheath (some models)	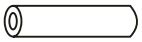	2
Installation Fittings	Hook		2
Drainpipe Fittings (for cooling & heating)	Drain joint (some models)	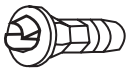	1
	Seal ring (some models)	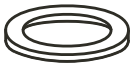	1
EMC Magnetic Ring (some models)	Magnetic ring (wrap the electric wires S1 & S2 (P & Q & E) around the magnetic ring twice)	 S1&S2(P&Q&E)	1
	Magnetic ring (Hitch on the connective cable between the indoor unit and outdoor unit after installation.)		1
Others	Owner's manual&Installation manual	-	1
	Transfer connector(Φ12.7-Φ15.9)/(Φ0.5in-Φ0.63in) (Packed with the indoor unit) NOTE: Pipe size may differ from appliance to appliance. To meet different pipe size requirements, sometimes the pipe connections need a transfer connector installed on the outdoor unit .	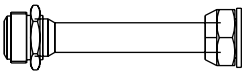	1 (on some models)
	Transfer connector(Φ6.35-Φ9.52)/(Φ0.25in-Φ0.37in) (Packed with the indoor unit) NOTE: Pipe size may differ from appliance to appliance. To meet different pipe size requirements, sometimes the pipe connections need a transfer connector installed on the outdoor unit .	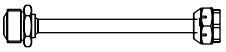	1 (on some models)
	Transfer connector(Φ9.52-Φ12.7)/(Φ0.375in-Φ0.5in) (Packed with the indoor unit) NOTE: Pipe size may differ from appliance to appliance. To meet different pipe size requirements, sometimes the pipe connections need a transfer connector installed on the outdoor unit .	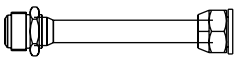	1 (on some models)
	Red short connected wire (Applied to the W/L pin of outdoor unit terminal block be short-circuited.)	-	1 (on some models)

Optional accessories:

- There are two types of remote controls: wired and wireless.
- Select a remote controller based on customer preferences and requirements and install in an appropriate place.
- Refer to catalogues and technical literature for guidance on selecting a suitable remote controller.

6. Air Velocity and Temperature Distributions

Discharge Angle 60°

Airflow velocity

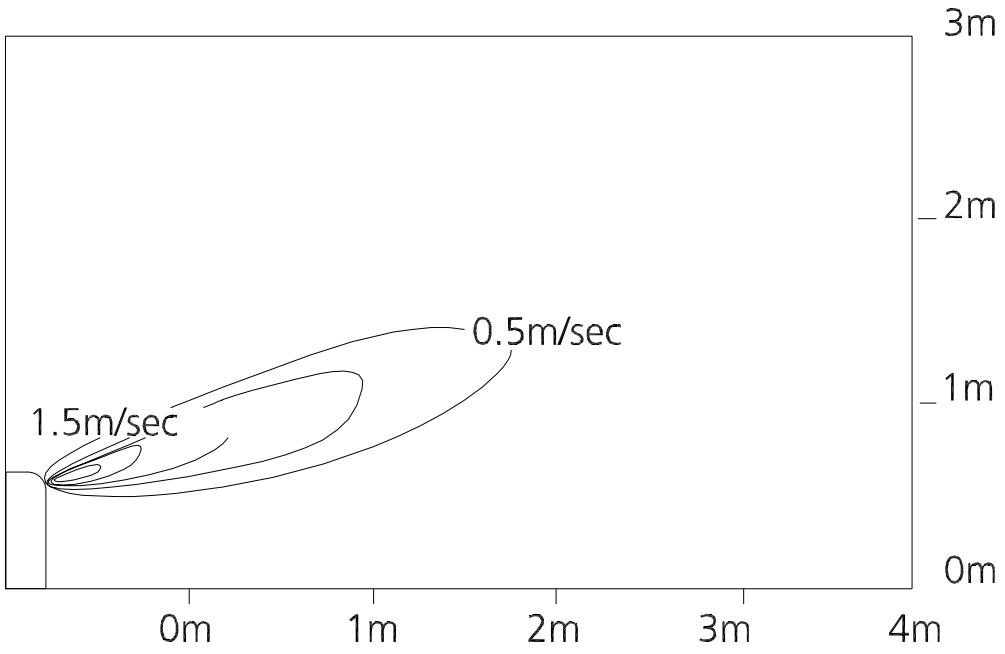

Temperature

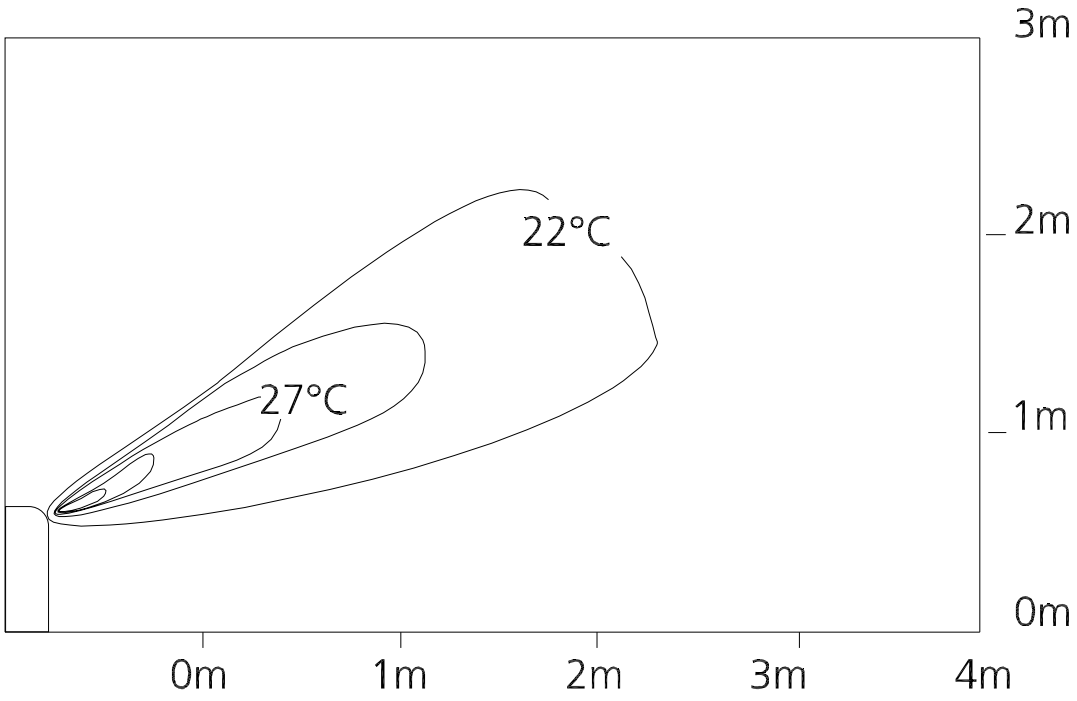

7. Capacity Tables

7.1 Cooling

12k																		
INDOOR AIRFLOW (CMH)	OUTDOOR DB(℃)	ID WB (℃)	16.0				18.0				19.0				22.0			
		ID DB (℃)	23.0	25.0	27.0	29.0	23.0	25.0	27.0	29.0	23.0	25.0	27.0	29.0	23.0	25.0	27.0	29.0
386	-15	TC	3.71	3.72	3.72	3.75	3.90	3.96	3.96	3.96	4.00	4.00	4.00	4.00	4.25	4.25	4.25	4.25
		S/T	0.68	0.74	0.81	0.88	0.55	0.62	0.69	0.75	0.49	0.56	0.63	0.69	0.37	0.42	0.48	0.54
		PI	0.68	0.68	0.68	0.68	0.68	0.68	0.68	0.68	0.68	0.68	0.68	0.68	0.67	0.67	0.67	0.67
	-10	TC	3.68	3.70	3.70	3.73	3.87	3.93	3.93	3.93	3.98	3.98	3.98	3.98	4.23	4.23	4.23	4.23
		S/T	0.68	0.75	0.82	0.88	0.55	0.62	0.69	0.76	0.49	0.56	0.63	0.69	0.37	0.43	0.49	0.54
		PI	0.68	0.67	0.67	0.68	0.68	0.68	0.68	0.68	0.68	0.68	0.68	0.68	0.67	0.67	0.67	0.67
	-5	TC	3.66	3.67	3.67	3.70	3.86	3.92	3.92	3.92	3.96	3.96	3.96	3.96	4.22	4.22	4.22	4.22
		S/T	0.68	0.75	0.82	0.89	0.56	0.62	0.69	0.76	0.50	0.57	0.63	0.69	0.37	0.43	0.49	0.55
		PI	0.68	0.67	0.67	0.68	0.68	0.68	0.68	0.68	0.68	0.68	0.68	0.68	0.67	0.67	0.67	0.67
	0	TC	3.64	3.66	3.66	3.68	3.85	3.91	3.91	3.91	3.95	3.95	3.95	3.95	4.22	4.22	4.22	4.22
		S/T	0.69	0.75	0.82	0.89	0.56	0.63	0.70	0.76	0.50	0.57	0.64	0.70	0.37	0.43	0.49	0.55
		PI	0.68	0.68	0.68	0.68	0.68	0.68	0.68	0.68	0.68	0.68	0.68	0.68	0.68	0.68	0.68	0.68
	5	TC	3.62	3.64	3.64	3.67	3.83	3.89	3.89	3.89	3.94	3.94	3.94	3.94	4.21	4.21	4.21	4.21
		S/T	0.69	0.76	0.83	0.90	0.56	0.63	0.70	0.77	0.50	0.57	0.64	0.70	0.37	0.43	0.49	0.55
		PI	0.68	0.68	0.68	0.68	0.68	0.68	0.68	0.68	0.69	0.69	0.69	0.69	0.68	0.68	0.68	0.68
	10	TC	3.60	3.61	3.61	3.64	3.81	3.87	3.87	3.87	3.92	3.92	3.92	3.92	4.20	4.20	4.20	4.20
		S/T	0.69	0.76	0.83	0.90	0.56	0.63	0.70	0.77	0.50	0.57	0.64	0.70	0.38	0.44	0.50	0.55
		PI	0.70	0.69	0.69	0.70	0.69	0.69	0.69	0.69	0.70	0.70	0.70	0.70	0.69	0.69	0.69	0.69
	15	TC	3.57	3.59	3.59	3.61	3.79	3.85	3.85	3.85	3.90	3.90	3.90	3.90	4.19	4.19	4.19	4.19
		S/T	0.70	0.77	0.84	0.91	0.57	0.64	0.71	0.78	0.51	0.58	0.65	0.71	0.38	0.44	0.50	0.56
		PI	0.71	0.71	0.71	0.71	0.71	0.71	0.71	0.71	0.71	0.71	0.71	0.71	0.70	0.70	0.70	0.70
	20	TC	3.53	3.54	3.54	3.57	3.75	3.75	3.75	3.75	3.86	3.86	3.86	3.86	4.15	4.15	4.15	4.15
		S/T	0.70	0.77	0.84	0.91	0.57	0.64	0.71	0.78	0.51	0.58	0.65	0.71	0.38	0.44	0.50	0.56
		PI	0.74	0.74	0.74	0.74	0.74	0.74	0.74	0.74	0.74	0.74	0.74	0.74	0.73	0.73	0.73	0.73
	25	TC	3.37	3.37	3.37	3.40	3.57	3.57	3.57	3.57	3.69	3.69	3.69	3.69	3.98	3.98	3.98	3.98
		S/T	0.70	0.78	0.86	0.93	0.57	0.65	0.72	0.79	0.51	0.58	0.65	0.72	0.37	0.44	0.50	0.57
		PI	0.81	0.81	0.81	0.81	0.81	0.81	0.81	0.81	0.81	0.81	0.81	0.81	0.81	0.81	0.81	0.81
	30	TC	3.20	3.20	3.20	3.23	3.43	3.43	3.43	3.43	3.52	3.52	3.52	3.52	3.80	3.80	3.80	3.80
		S/T	0.71	0.79	0.87	0.95	0.57	0.65	0.73	0.80	0.51	0.59	0.66	0.73	0.37	0.44	0.51	0.57
		PI	0.89	0.89	0.89	0.89	0.89	0.89	0.89	0.89	0.89	0.89	0.89	0.89	0.89	0.89	0.89	0.89
	35	TC	3.05	3.05	3.08	3.11	3.26	3.26	3.26	3.26	3.34	3.34	3.40	3.34	3.60	3.60	3.60	3.60
		S/T	0.72	0.80	0.88	0.96	0.58	0.66	0.74	0.82	0.51	0.59	0.67	0.75	0.36	0.44	0.51	0.58
		PI	0.97	0.97	0.97	0.97	0.98	0.98	0.98	0.98	0.98	0.98	0.98	0.98	0.99	0.99	0.99	0.99
	40	TC	2.89	2.89	2.92	2.95	3.09	3.09	3.09	3.09	3.18	3.18	3.21	3.18	3.43	3.43	3.43	3.43
		S/T	0.74	0.83	0.92	1.00	0.59	0.67	0.76	0.85	0.52	0.60	0.69	0.77	0.36	0.44	0.51	0.59
		PI	1.08	1.08	1.08	1.08	1.08	1.08	1.08	1.08	1.09	1.09	1.09	1.09	1.10	1.10	1.10	1.10
	46	TC	2.67	2.67	2.70	2.73	2.87	2.87	2.87	2.87	2.96	2.96	2.96	2.96	3.19	3.19	3.19	3.19
		S/T	0.75	0.84	0.94	1.00	0.59	0.68	0.77	0.86	0.52	0.61	0.69	0.78	0.35	0.44	0.52	0.60
		PI	1.20	1.20	1.20	1.20	1.20	1.20	1.20	1.20	1.21	1.21	1.21	1.21	1.22	1.22	1.22	1.22
	50	TC	2.53	2.53	2.55	2.58	2.70	2.70	2.70	2.73	2.79	2.79	2.79	2.79	3.02	3.02	3.02	3.02
		S/T	0.76	0.86	0.96	1.00	0.60	0.69	0.79	0.88	0.52	0.62	0.71	0.80	0.35	0.44	0.52	0.61
		PI	1.30	1.30	1.30	1.30	1.31	1.31	1.31	1.31	1.31	1.31	1.31	1.31	1.32	1.32	1.32	1.32

466	-15	TC	3.78	3.78	3.81	3.84	3.96	3.96	3.96	3.96	4.06	4.06	4.06	4.06	4.31	4.31	4.31	4.31
		S/T	0.70	0.78	0.98	1.00	0.56	0.64	0.72	0.80	0.49	0.57	0.65	0.72	0.35	0.42	0.49	0.56
		PI	0.70	0.70	0.70	0.70	0.69	0.69	0.69	0.69	0.69	0.69	0.69	0.69	0.69	0.69	0.69	0.69
	-10	TC	3.76	3.76	3.79	3.82	3.93	3.93	3.93	3.93	4.04	4.04	4.04	4.04	4.29	4.29	4.29	4.29
		S/T	0.70	0.79	0.99	1.00	0.56	0.64	0.73	0.81	0.49	0.57	0.65	0.73	0.35	0.43	0.49	0.56
		PI	0.69	0.69	0.69	0.69	0.69	0.69	0.69	0.69	0.69	0.69	0.69	0.69	0.69	0.69	0.69	0.69
	-5	TC	3.73	3.73	3.76	3.79	3.92	3.92	3.92	3.92	4.02	4.02	4.02	4.02	4.28	4.28	4.28	4.28
		S/T	0.70	0.79	0.99	1.00	0.57	0.64	0.73	0.81	0.50	0.58	0.65	0.73	0.35	0.43	0.50	0.57
		PI	0.69	0.69	0.69	0.69	0.69	0.69	0.69	0.69	0.69	0.69	0.69	0.69	0.69	0.69	0.69	0.69
	0	TC	3.72	3.72	3.75	3.77	3.91	3.91	3.91	3.91	4.01	4.01	4.01	4.01	4.28	4.28	4.28	4.28
		S/T	0.71	0.79	1.00	1.00	0.57	0.65	0.74	0.81	0.50	0.58	0.66	0.74	0.35	0.43	0.50	0.57
		PI	0.69	0.69	0.69	0.69	0.69	0.69	0.69	0.69	0.69	0.69	0.69	0.69	0.69	0.69	0.69	0.69
	5	TC	3.70	3.70	3.73	3.76	3.89	3.89	3.89	3.89	4.00	4.00	4.00	4.00	4.27	4.27	4.27	4.27
		S/T	0.71	0.80	1.00	1.00	0.57	0.65	0.74	0.82	0.50	0.58	0.66	0.74	0.35	0.43	0.50	0.57
		PI	0.70	0.70	0.70	0.70	0.69	0.69	0.69	0.69	0.70	0.70	0.70	0.70	0.70	0.70	0.70	0.70
	10	TC	3.67	3.67	3.70	3.73	3.87	3.87	3.87	3.87	3.98	3.98	3.98	3.98	4.26	4.26	4.26	4.26
		S/T	0.71	0.80	1.00	1.00	0.57	0.65	0.74	0.82	0.50	0.58	0.66	0.74	0.36	0.44	0.50	0.57
		PI	0.71	0.71	0.71	0.71	0.70	0.70	0.70	0.70	0.71	0.71	0.71	0.71	0.71	0.71	0.71	0.71
	15	TC	3.64	3.64	3.67	3.70	3.85	3.85	3.85	3.85	3.96	3.96	3.96	3.96	4.25	4.25	4.25	4.25
		S/T	0.72	0.81	0.89	0.98	0.58	0.66	0.75	0.83	0.51	0.59	0.67	0.75	0.36	0.44	0.51	0.58
		PI	0.73	0.73	0.73	0.73	0.72	0.72	0.72	0.72	0.72	0.72	0.72	0.72	0.72	0.72	0.72	0.72
	20	TC	3.60	3.60	3.63	3.66	3.81	3.81	3.81	3.81	3.92	3.92	3.92	3.92	4.21	4.21	4.21	4.21
		S/T	0.72	0.81	0.89	0.98	0.58	0.66	0.75	0.83	0.51	0.59	0.67	0.75	0.36	0.44	0.51	0.58
		PI	0.76	0.76	0.76	0.76	0.75	0.75	0.75	0.75	0.75	0.75	0.75	0.75	0.75	0.75	0.75	0.75
	25	TC	3.43	3.43	3.46	3.49	3.63	3.63	3.63	3.63	3.75	3.75	3.75	3.75	4.04	4.04	4.04	4.04
		S/T	0.73	0.82	0.91	1.00	0.58	0.67	0.76	0.84	0.52	0.60	0.68	0.77	0.36	0.44	0.51	0.59
		PI	0.83	0.83	0.83	0.83	0.83	0.83	0.83	0.83	0.83	0.83	0.83	0.83	0.83	0.83	0.83	0.83
	30	TC	3.26	3.26	3.29	3.32	3.49	3.49	3.49	3.49	3.57	3.57	3.57	3.57	3.86	3.86	3.86	3.86
		S/T	0.74	0.84	0.93	1.00	0.59	0.68	0.77	0.86	0.52	0.61	0.69	0.78	0.36	0.44	0.52	0.60
		PI	0.91	0.91	0.91	0.91	0.91	0.91	0.91	0.91	0.91	0.91	0.91	0.91	0.91	0.91	0.91	0.91
	35	TC	3.11	3.11	3.14	3.17	3.32	3.32	3.32	3.32	3.40	3.40	3.46	3.40	3.66	3.66	3.66	3.66
		S/T	0.75	0.85	0.95	1.00	0.59	0.69	0.78	0.88	0.52	0.61	0.70	0.80	0.35	0.44	0.52	0.61
		PI	0.99	0.99	0.99	0.99	1.00	1.00	1.00	1.00	1.00	1.00	1.00	1.00	1.00	1.00	1.00	1.00
	40	TC	2.89	2.91	2.94	2.96	3.08	3.08	3.08	3.09	3.17	3.17	3.20	3.17	3.42	3.42	3.42	3.42
		S/T	0.78	0.88	0.99	1.00	0.61	0.71	0.82	0.92	0.53	0.63	0.73	0.83	0.35	0.44	0.53	0.62
		PI	1.09	1.09	1.09	1.09	1.10	1.10	1.10	1.10	1.10	1.10	1.10	1.10	1.10	1.10	1.10	1.10
	46	TC	2.68	2.71	2.73	2.76	2.85	2.85	2.85	2.88	2.93	2.93	2.93	2.93	3.19	3.19	3.19	3.19
		S/T	0.79	0.90	1.00	1.00	0.61	0.72	0.83	0.93	0.53	0.64	0.74	0.85	0.34	0.44	0.54	0.63
		PI	1.21	1.21	1.21	1.21	1.22	1.22	1.22	1.22	1.22	1.22	1.22	1.22	1.23	1.23	1.23	1.23
	50	TC	2.51	2.53	2.56	2.59	2.68	2.68	2.68	2.71	2.76	2.76	2.76	2.76	3.02	3.02	3.02	3.02
		S/T	0.81	0.93	1.00	1.00	0.62	0.74	0.85	0.96	0.54	0.65	0.76	0.87	0.34	0.44	0.54	0.91
		PI	1.32	1.32	1.32	1.32	1.32	1.32	1.32	1.32	1.33	1.33	1.33	1.33	1.34	1.34	1.34	1.34
550	-15	TC	3.84	3.84	3.87	3.90	4.02	4.02	4.02	4.02	4.12	4.12	4.12	4.12	4.40	4.40	4.40	4.40
		S/T	0.72	0.82	1.00	1.00	0.58	0.67	0.76	0.98	0.50	0.59	0.69	0.77	0.34	0.42	0.50	0.59
		PI	0.71	0.71	0.71	0.71	0.71	0.71	0.71	0.71	0.71	0.71	0.71	0.71	0.70	0.70	0.70	0.70
	-10	TC	3.82	3.82	3.85	3.88	3.99	3.99	3.99	3.99	4.10	4.10	4.10	4.10	4.38	4.38	4.38	4.38
		S/T	0.73	0.82	1.00	1.00	0.58	0.67	0.77	0.98	0.50	0.59	0.69	0.78	0.34	0.43	0.50	0.59
		PI	0.70	0.70	0.70	0.70	0.70	0.70	0.70	0.70	0.71	0.71	0.71	0.71	0.70	0.70	0.70	0.70
	-5	TC	3.79	3.79	3.82	3.85	3.98	3.98	3.98	3.98	4.08	4.08	4.08	4.08	4.37	4.37	4.37	4.37
		S/T	0.73	0.83	1.00	1.00	0.59	0.67	0.77	0.99	0.51	0.59	0.69	0.78	0.34	0.43	0.51	0.59
		PI	0.70	0.70	0.70	0.70	0.70	0.70	0.70	0.70	0.71	0.71	0.71	0.71	0.70	0.70	0.70	0.70
	0	TC	3.77	3.77	3.80	3.83	3.96	3.96	3.96	3.96	4.07	4.07	4.07	4.07	4.37	4.37	4.37	4.37
		S/T	0.74	0.83	1.00	1.00	0.59	0.68	0.77	0.99	0.51	0.60	0.70	0.78	0.34	0.43	0.51	0.60
		PI	0.70	0.70	0.70	0.70	0.71	0.71	0.71	0.71	0.71	0.71	0.71	0.71	0.70	0.70	0.70	0.70
	5	TC	3.76	3.76	3.79	3.82	3.95	3.95	3.95	3.95	4.06	4.06	4.06	4.06	4.36	4.36	4.36	4.36
		S/T	0.74	0.84	1.00	1.00	0.59	0.68	0.78	1.00	0.51	0.60	0.70	0.79	0.34	0.43	0.51	0.60
		PI	0.71	0.71	0.71	0.71	0.71	0.71	0.71	0.71	0.71	0.71	0.71	0.71	0.71	0.71	0.71	0.71
	10	TC	3.73	3.73	3.76	3.79	3.93	3.93	3.93	3.93	4.04	4.04	4.04	4.04	4.35	4.35	4.35	4.35
		S/T	0.74	0.84	1.00	1.00	0.59	0.68	0.78	1.00	0.51	0.60	0.70	0.79	0.35	0.44	0.51	0.60
		PI	0.72	0.72	0.72	0.72	0.72	0.72	0.72	0.72	0.72	0.72	0.72	0.72	0.72	0.72	0.72	0.72
	15	TC	3.70	3.70	3.73	3.76	3.90	3.90	3.90	3.90	4.02	4.02	4.02	4.02	4.33	4.33	4.33	4.33
		S/T	0.75	0.85	0.95	1.00	0.60	0.69	0.79	0.88	0.52	0.61	0.71	0.80	0.35	0.44	0.52	0.61
		PI	0.74	0.74	0.74	0.74	0.74	0.74	0.74	0.74	0.74	0.74	0.74	0.74	0.73	0.73	0.73	0.73
	20	TC	3.66	3.66	3.69	3.72	3.86	3.86	3.86	3.86	3.98	3.98	3.98	3.98	4.30	4.30	4.30	4.30
		S/T	0.75	0.85	0.95	1.00	0.60	0.69	0.79	0.88	0.52	0.61	0.71	0.80	0.35	0.44	0.52	0.61
		PI	0.77	0.77	0.77	0.77	0.77	0.77	0.77	0.77	0.77	0.77	0.77	0.77	0.76	0.76	0.76	0.76
	25	TC	3.49	3.49	3.52	3.55	3.69	3.69	3.69	3.72	3.81	3.81	3.81	3.81	4.09	4.09	4.09	4.09
		S/T	0.76	0.87	0.97	1.00	0.60	0.70	0.80	0.90	0.52	0.62	0.72	0.82	0.35	0.44	0.53	0.62
		PI	0.84	0.84	0.84	0.84	0.84	0.84	0.84	0.84	0.84	0.84	0.84	0.84	0.84	0.84	0.84	0.84
	30	TC	3.32	3.34	3.37	3.40	3.55	3.55	3.55	3.57	3.63	3.63	3.63	3.63	3.92	3.92	3.92	3.92
		S/T	0.78	0.89	0.99	1.00	0.61	0.71	0.81	0.92	0.53	0.63	0.73	0.83	0.34	0.44	0.53	0.63
		PI	0.92	0.92	0.92	0.92	0.93	0.93	0.93	0.93	0.93	0.93	0.93	0.93	0.93	0.93	0.93	0.93
	35	TC	3.14	3.17	3.20	3.23	3.37	3.37	3.37	3.40	3.46	3.46	**3.52**	3.46	3.75	3.75	3.75	3.75
		S/T	0.79	0.91	1.00	1.00	0.61	0.72	0.83	0.94	0.53	0.64	**0.74**	0.85	0.34	0.44	0.54	0.64
		PI	1.01	1.01	1.01	1.01	1.02	1.02	1.02	1.02	1.02	1.02	**1.02**	1.02	1.03	1.03	1.03	1.03
	40	TC	2.92	2.95	2.98	3.01	3.14	3.14	3.15	3.18	3.22	3.22	3.25	3.24	3.50	3.50	3.50	3.50
		S/T	0.82	0.94	1.00	1.00	0.63	0.75	0.87	0.99	0.54	0.66	0.77	0.89	0.34	0.44	0.55	0.90
		PI	1.11	1.11	1.11	1.11	1.12	1.12	1.12	1.12	1.12	1.12	1.12	1.12	1.13	1.13	1.13	1.13
	46	TC	2.71	2.73	2.76	2.79	2.90	2.90	2.93	2.96	2.99	2.99	2.99	3.02	3.25	3.25	3.25	3.25
		S/T	0.84	0.97	1.00	1.00	0.64	0.76	0.88	1.00	0.54	0.67	0.79	0.91	0.33	0.45	0.56	0.92
		PI	1.24	1.24	1.24	1.24	1.24	1.24	1.24	1.24	1.25	1.25	1.25	1.25	1.26	1.26	1.26	1.26
	50	TC	2.56	2.59	2.62	2.65	2.73	2.73	2.76	2.79	2.82	2.82	2.82	2.85	3.05	3.05	3.05	3.05
		S/T	0.86	1.00	1.00	1.00	0.65	0.78	0.91	1.00	0.55	0.68	0.81	0.94	0.33	0.45	0.57	0.97
		PI	1.34	1.34	1.34	1.34	1.35	1.35	1.35	1.35	1.35	1.35	1.35	1.35	1.36	1.36	1.36	1.36

TC:Total Cooling Capacity (kW)

S/T:Sensible Cooling Capacity Ratio

PI:Power Input(kW)

Note: The table shows the case where the operation frequency of a compressor is fixed.

16k																			
INDOOR AIRFLOW (CMH)	OUTDOOR DB(℃)	ID WB (℃)	16.0				18.0				19.0				22.0				
		ID DB (℃)	23.0	25.0	27.0	29.0	23.0	25.0	27.0	29.0	23.0	25.0	27.0	29.0	23.0	25.0	27.0	29.0	
400	-15	TC	5.08	5.07	5.07	5.07	5.34	5.45	5.45	5.45	5.48	5.48	5.48	5.48	5.80	5.80	5.80	5.80	
		S/T	0.65	0.70	0.75	0.81	0.55	0.60	0.66	0.70	0.50	0.55	0.60	0.65	0.40	0.43	0.48	0.53	
		PI	1.07	1.07	1.07	1.07	1.07	1.07	1.07	1.07	1.06	1.06	1.06	1.06	1.06	1.06	1.06	1.06	
	-10	TC	5.05	5.04	5.04	5.04	5.31	5.42	5.42	5.42	5.45	5.45	5.45	5.45	5.78	5.78	5.78	5.78	
		S/T	0.65	0.71	0.76	0.82	0.55	0.60	0.66	0.71	0.50	0.55	0.60	0.65	0.40	0.44	0.49	0.53	
		PI	1.06	1.06	1.06	1.06	1.07	1.07	1.07	1.07	1.06	1.06	1.06	1.06	1.06	1.06	1.06	1.06	
	-5	TC	5.02	5.01	5.01	5.01	5.29	5.40	5.40	5.40	5.43	5.43	5.43	5.43	5.77	5.77	5.77	5.77	
		S/T	0.65	0.71	0.76	0.82	0.56	0.61	0.66	0.71	0.51	0.56	0.60	0.65	0.40	0.44	0.49	0.54	
		PI	1.06	1.06	1.06	1.06	1.06	1.06	1.06	1.06	1.06	1.06	1.06	1.06	1.07	1.07	1.07	1.07	
	0	TC	4.99	4.98	4.98	4.98	5.27	5.38	5.38	5.38	5.42	5.42	5.42	5.42	5.76	5.76	5.76	5.76	
		S/T	0.66	0.72	0.76	0.82	0.56	0.61	0.67	0.72	0.51	0.56	0.61	0.66	0.40	0.44	0.49	0.54	
		PI	1.07	1.06	1.06	1.07	1.07	1.07	1.07	1.07	1.06	1.06	1.06	1.06	1.07	1.07	1.07	1.07	
	5	TC	4.97	4.96	4.96	4.96	5.25	5.36	5.36	5.36	5.40	5.40	5.40	5.40	5.76	5.76	5.76	5.76	
		S/T	0.66	0.72	0.77	0.83	0.56	0.61	0.67	0.72	0.51	0.56	0.61	0.66	0.40	0.44	0.49	0.54	
		PI	1.08	1.07	1.07	1.08	1.08	1.08	1.08	1.08	1.07	1.07	1.07	1.07	1.08	1.08	1.08	1.08	
	10	TC	4.94	4.93	4.93	4.93	5.23	5.33	5.33	5.33	5.38	5.38	5.38	5.38	5.74	5.74	5.74	5.74	
		S/T	0.66	0.72	0.77	0.83	0.56	0.62	0.67	0.72	0.51	0.56	0.61	0.66	0.41	0.45	0.50	0.54	
		PI	1.09	1.09	1.09	1.09	1.09	1.09	1.09	1.09	1.09	1.09	1.09	1.09	1.09	1.09	1.09	1.09	
	15	TC	4.90	4.89	4.89	4.89	5.19	5.29	5.29	5.29	5.35	5.35	5.35	5.35	5.72	5.72	5.72	5.72	
		S/T	0.67	0.73	0.78	0.84	0.57	0.62	0.68	0.73	0.52	0.57	0.62	0.67	0.41	0.45	0.50	0.55	
		PI	1.12	1.12	1.12	1.12	1.12	1.12	1.12	1.12	1.11	1.11	1.11	1.11	1.11	1.11	1.11	1.11	
	20	TC	4.84	4.83	4.83	4.83	5.14	5.15	5.15	5.15	5.29	5.29	5.29	5.29	5.67	5.67	5.67	5.67	
		S/T	0.67	0.73	0.78	0.84	0.57	0.62	0.68	0.73	0.52	0.57	0.62	0.67	0.41	0.45	0.50	0.55	
		PI	1.16	1.16	1.16	1.16	1.16	1.16	1.16	1.16	1.15	1.15	1.15	1.15	1.15	1.15	1.15	1.15	
	25	TC	4.63	4.63	4.63	4.63	4.92	4.92	4.92	4.92	5.06	5.06	5.06	5.06	5.44	5.44	5.44	5.44	
		S/T	0.68	0.73	0.79	0.85	0.57	0.62	0.68	0.73	0.52	0.57	0.63	0.68	0.40	0.45	0.50	0.55	
		PI	1.28	1.28	1.28	1.28	1.28	1.28	1.28	1.28	1.28	1.28	1.28	1.28	1.28	1.28	1.28	1.28	
	30	TC	4.40	4.40	4.40	4.40	4.69	4.69	4.69	4.69	4.83	4.83	4.83	4.83	5.21	5.21	5.21	5.21	
		S/T	0.68	0.74	0.80	0.86	0.57	0.63	0.68	0.74	0.52	0.57	0.63	0.68	0.40	0.45	0.50	0.55	
		PI	1.40	1.40	1.40	1.40	1.40	1.40	1.40	1.40	1.40	1.40	1.40	1.40	1.41	1.41	1.41	1.41	
	35	TC	4.17	4.17	4.17	4.17	4.46	4.46	4.46	4.46	4.60	4.60	4.66	4.60	4.95	4.95	4.95	4.95	
		S/T	0.68	0.75	0.81	0.88	0.57	0.63	0.69	0.75	0.51	0.57	0.63	0.69	0.39	0.45	0.50	0.55	
		PI	1.53	1.53	1.53	1.53	1.53	1.53	1.53	1.53	1.54	1.54	1.54	1.54	1.55	1.55	1.55	1.55	
	40	TC	3.95	3.95	3.95	3.97	4.22	4.22	4.22	4.22	4.36	4.36	4.39	4.36	4.69	4.69	4.69	4.69	
		S/T	0.69	0.76	0.83	0.90	0.57	0.64	0.70	0.77	0.51	0.58	0.64	0.71	0.38	0.44	0.50	0.56	
		PI	1.69	1.69	1.69	1.69	1.70	1.70	1.70	1.70	1.71	1.71	1.71	1.71	1.72	1.72	1.72	1.72	
	46	TC	3.67	3.67	3.67	3.70	3.90	3.90	3.90	3.90	4.05	4.05	4.05	4.05	4.36	4.36	4.36	4.36	
		S/T	0.70	0.77	0.84	0.91	0.57	0.64	0.71	0.78	0.51	0.58	0.65	0.71	0.38	0.44	0.50	0.56	
		PI	1.88	1.88	1.88	1.88	1.89	1.89	1.89	1.89	1.90	1.90	1.90	1.90	1.91	1.91	1.91	1.91	
	50	TC	3.44	3.44	3.44	3.47	3.67	3.67	3.67	3.67	3.79	3.79	3.79	3.79	4.10	4.10	4.10	4.10	
		S/T	0.70	0.78	0.86	0.94	0.57	0.65	0.72	0.79	0.51	0.58	0.65	0.73	0.37	0.44	0.50	0.57	
		PI	2.04	2.04	2.04	2.04	2.05	2.05	2.05	2.05	2.06	2.06	2.06	2.06	2.07	2.07	2.07	2.07	
480	-15	TC	5.16	5.16	5.16	5.16	5.45	5.45	5.45	5.45	5.57	5.57	5.57	5.57	5.92	5.92	5.92	5.92	
		S/T	0.66	0.72	0.98	1.00	0.55	0.61	0.67	0.72	0.49	0.55	0.61	0.67	0.38	0.42	0.48	0.53	
		PI	1.09	1.09	1.09	1.09	1.09	1.09	1.09	1.09	1.09	1.09	1.09	1.09	1.08	1.08	1.08	1.08	
	-10	TC	5.13	5.13	5.13	5.13	5.42	5.42	5.42	5.42	5.55	5.55	5.55	5.55	5.90	5.90	5.90	5.90	
		S/T	0.66	0.73	0.99	1.00	0.55	0.61	0.67	0.73	0.49	0.55	0.61	0.67	0.38	0.43	0.49	0.53	
		PI	1.08	1.08	1.08	1.08	1.08	1.08	1.08	1.08	1.09	1.09	1.09	1.09	1.08	1.08	1.08	1.08	
	-5	TC	5.10	5.10	5.10	5.10	5.40	5.40	5.40	5.40	5.53	5.53	5.53	5.53	5.89	5.89	5.89	5.89	
		S/T	0.66	0.73	0.99	1.00	0.56	0.61	0.67	0.73	0.50	0.56	0.61	0.67	0.38	0.43	0.49	0.54	
		PI	1.08	1.08	1.08	1.08	1.08	1.08	1.08	1.08	1.09	1.09	1.09	1.09	1.08	1.08	1.08	1.08	
	0	TC	5.08	5.08	5.08	5.08	5.38	5.38	5.38	5.38	5.51	5.51	5.51	5.51	5.88	5.88	5.88	5.88	
		S/T	0.67	0.74	1.00	1.00	0.56	0.62	0.68	0.74	0.50	0.56	0.62	0.68	0.38	0.43	0.49	0.54	
		PI	1.08	1.08	1.08	1.08	1.09	1.09	1.09	1.09	1.09	1.09	1.09	1.09	1.09	1.09	1.09	1.09	
	5	TC	5.05	5.05	5.05	5.05	5.36	5.36	5.36	5.36	5.49	5.49	5.49	5.49	5.88	5.88	5.88	5.88	
		S/T	0.67	0.74	1.00	1.00	0.56	0.62	0.68	0.74	0.50	0.56	0.62	0.68	0.38	0.43	0.49	0.54	
		PI	1.09	1.09	1.09	1.09	1.10	1.10	1.10	1.10	1.10	1.10	1.10	1.10	1.10	1.10	1.10	1.10	
	10	TC	5.02	5.02	5.02	5.02	5.33	5.33	5.33	5.33	5.47	5.47	5.47	5.47	5.86	5.86	5.86	5.86	
		S/T	0.67	0.74	1.00	1.00	0.56	0.62	0.68	0.74	0.50	0.56	0.62	0.68	0.39	0.44	0.50	0.54	
		PI	1.11	1.11	1.11	1.11	1.11	1.11	1.11	1.11	1.12	1.12	1.12	1.12	1.11	1.11	1.11	1.11	
	15	TC	4.98	4.98	4.98	4.98	5.29	5.29	5.29	5.29	5.44	5.44	5.44	5.44	5.84	5.84	5.84	5.84	
		S/T	0.68	0.75	0.81	0.88	0.57	0.63	0.69	0.75	0.51	0.57	0.63	0.69	0.39	0.44	0.50	0.55	
		PI	1.14	1.14	1.14	1.14	1.14	1.14	1.14	1.14	1.14	1.14	1.14	1.14	1.13	1.13	1.13	1.13	
	20	TC	4.92	4.92	4.92	4.92	5.24	5.24	5.24	5.24	5.38	5.38	5.38	5.38	5.79	5.79	5.79	5.79	
		S/T	0.68	0.75	0.81	0.88	0.57	0.63	0.69	0.75	0.51	0.57	0.63	0.69	0.39	0.44	0.50	0.55	
		PI	1.18	1.18	1.18	1.18	1.18	1.18	1.18	1.18	1.18	1.18	1.18	1.18	1.17	1.17	1.17	1.17	
	25	TC	4.72	4.72	4.72	4.78	5.01	5.01	5.01	5.01	5.15	5.15	5.15	5.15	5.53	5.53	5.53	5.53	
		S/T	0.69	0.76	0.82	0.89	0.57	0.63	0.70	0.76	0.51	0.58	0.64	0.70	0.38	0.44	0.50	0.56	
		PI	1.31	1.31	1.31	1.31	1.31	1.31	1.31	1.31	1.31	1.31	1.31	1.31	1.31	1.31	1.31	1.31	
	30	TC	4.49	4.49	4.49	4.55	4.78	4.78	4.78	4.78	4.92	4.92	4.92	4.92	5.30	5.30	5.30	5.30	
		S/T	0.69	0.76	0.84	0.90	0.57	0.64	0.70	0.77	0.51	0.58	0.64	0.71	0.38	0.44	0.50	0.56	
		PI	1.42	1.42	1.42	1.42	1.43	1.43	1.43	1.43	1.43	1.43	1.43	1.43	1.43	1.43	1.43	1.43	
	35	TC	4.26	4.26	4.26	4.29	4.55	4.55	4.55	4.55	4.66	4.66	4.75	4.66	5.04	5.04	5.04	5.04	
		S/T	0.70	0.77	0.85	0.92	0.57	0.64	0.71	0.78	0.51	0.58	0.65	0.72	0.37	0.44	0.50	0.57	
		PI	1.56	1.56	1.56	1.56	1.56	1.56	1.56	1.56	1.57	1.57	1.57	1.57	1.57	1.57	1.57	1.57	
	40	TC	4.00	4.00	4.01	4.04	4.27	4.27	4.27	4.27	4.39	4.39	4.44	4.39	4.75	4.75	4.75	4.75	
		S/T	0.71	0.80	0.88	0.96	0.58	0.65	0.73	0.81	0.51	0.59	0.66	0.74	0.37	0.44	0.51	0.58	
		PI	1.72	1.72	1.72	1.72	1.72	1.72	1.72	1.72	1.73	1.73	1.73	1.73	1.74	1.74	1.74	1.74	
	46	TC	3.70	3.70	3.73	3.76	3.96	3.96	3.96	3.96	4.08	4.08	4.08	4.08	4.42	4.42	4.42	4.42	
		S/T	0.72	0.81	0.89	0.97	0.58	0.66	0.74	0.82	0.51	0.59	0.67	0.75	0.36	0.44	0.51	0.58	
		PI	1.91	1.91	1.91	1.91	1.92	1.92	1.92	1.92	1.92	1.92	1.92	1.92	1.94	1.94	1.94	1.94	
	50	TC	3.47	3.47	3.50	3.53	3.70	3.70	3.70	3.70	3.85	3.85	3.85	3.85	4.16	4.16	4.16	4.16	
		S/T	0.73	0.83	0.92	1.00	0.59	0.67	0.76	0.85	0.52	0.60	0.68	0.77	0.36	0.44	0.51	0.91	
		PI	2.07	2.07	2.07	2.07	2.08	2.08	2.08	2.08	2.09	2.09	2.09	2.09	2.10	2.10	2.10	2.10	

560	-15	TC	5.28	5.28	5.28	5.34	5.54	5.54	5.54	5.54	5.69	5.69	5.69	5.69	6.04	6.04	6.04	6.04
		S/T	0.68	0.74	1.00	1.00	0.55	0.62	0.69	0.98	0.49	0.56	0.63	0.70	0.37	0.42	0.48	0.55
		PI	1.11	1.11	1.11	1.11	1.10	1.10	1.10	1.10	1.11	1.11	1.11	1.11	1.10	1.10	1.10	1.10
	-10	TC	5.25	5.25	5.25	5.31	5.51	5.51	5.51	5.51	5.66	5.66	5.66	5.66	6.02	6.02	6.02	6.02
		S/T	0.68	0.75	1.00	1.00	0.55	0.62	0.69	0.98	0.49	0.56	0.63	0.70	0.37	0.43	0.49	0.55
		PI	1.11	1.11	1.11	1.11	1.10	1.10	1.10	1.10	1.10	1.10	1.10	1.10	1.10	1.10	1.10	1.10
	-5	TC	5.22	5.22	5.22	5.28	5.49	5.49	5.49	5.49	5.64	5.64	5.64	5.64	6.00	6.00	6.00	6.00
		S/T	0.68	0.75	1.00	1.00	0.56	0.62	0.69	0.99	0.50	0.57	0.63	0.70	0.37	0.43	0.49	0.56
		PI	1.11	1.11	1.11	1.11	1.10	1.10	1.10	1.10	1.10	1.10	1.10	1.10	1.10	1.10	1.10	1.10
	0	TC	5.19	5.19	5.19	5.25	5.47	5.47	5.47	5.47	5.63	5.63	5.63	5.63	6.00	6.00	6.00	6.00
		S/T	0.69	0.75	1.00	1.00	0.56	0.63	0.70	0.99	0.50	0.57	0.64	0.71	0.37	0.43	0.49	0.56
		PI	1.11	1.11	1.11	1.11	1.10	1.10	1.10	1.10	1.11	1.11	1.11	1.11	1.11	1.11	1.11	1.11
	5	TC	5.17	5.17	5.17	5.23	5.44	5.44	5.44	5.44	5.61	5.61	5.61	5.61	5.99	5.99	5.99	5.99
		S/T	0.69	0.76	1.00	1.00	0.56	0.63	0.70	1.00	0.50	0.57	0.64	0.71	0.37	0.43	0.49	0.56
		PI	1.12	1.12	1.12	1.12	1.11	1.11	1.11	1.11	1.12	1.12	1.12	1.12	1.11	1.11	1.11	1.11
	10	TC	5.14	5.14	5.14	5.20	5.42	5.42	5.42	5.42	5.59	5.59	5.59	5.59	5.98	5.98	5.98	5.98
		S/T	0.69	0.76	1.00	1.00	0.56	0.63	0.70	1.00	0.50	0.57	0.64	0.71	0.38	0.44	0.50	0.56
		PI	1.14	1.14	1.14	1.14	1.13	1.13	1.13	1.13	1.13	1.13	1.13	1.13	1.13	1.13	1.13	1.13
	15	TC	5.09	5.09	5.09	5.15	5.38	5.38	5.38	5.38	5.55	5.55	5.55	5.55	5.95	5.95	5.95	5.95
		S/T	0.70	0.77	0.85	0.92	0.57	0.64	0.71	0.78	0.51	0.58	0.65	0.72	0.38	0.44	0.50	0.57
		PI	1.17	1.17	1.17	1.17	1.16	1.16	1.16	1.16	1.16	1.16	1.16	1.16	1.15	1.15	1.15	1.15
	20	TC	5.04	5.04	5.04	5.09	5.33	5.33	5.33	5.33	5.50	5.50	5.50	5.50	5.90	5.90	5.90	5.90
		S/T	0.70	0.77	0.85	0.92	0.57	0.64	0.71	0.78	0.51	0.58	0.65	0.72	0.38	0.44	0.50	0.57
		PI	1.21	1.21	1.21	1.21	1.20	1.20	1.20	1.20	1.20	1.20	1.20	1.20	1.19	1.19	1.19	1.19
	25	TC	4.81	4.81	4.81	4.86	5.09	5.09	5.09	5.09	5.24	5.24	5.24	5.24	5.64	5.64	5.64	5.64
		S/T	0.70	0.78	0.86	0.93	0.57	0.65	0.72	0.79	0.51	0.58	0.66	0.73	0.37	0.44	0.50	0.57
		PI	1.33	1.33	1.33	1.33	1.33	1.33	1.33	1.33	1.33	1.33	1.33	1.33	1.33	1.33	1.33	1.33
	30	TC	4.58	4.58	4.58	4.63	4.86	4.86	4.86	4.86	5.01	5.01	5.01	5.01	5.38	5.38	5.38	5.38
		S/T	0.71	0.79	0.88	0.95	0.58	0.65	0.73	0.81	0.51	0.59	0.66	0.74	0.37	0.44	0.51	0.58
		PI	1.45	1.45	1.45	1.45	1.45	1.45	1.45	1.45	1.45	1.45	1.45	1.45	1.46	1.46	1.46	1.46
	35	TC	4.35	4.35	4.40	4.46	4.61	4.61	4.61	4.61	4.75	4.75	**4.84**	4.75	5.12	5.12	5.12	5.12
		S/T	0.72	0.81	0.89	0.97	0.58	0.66	0.74	0.82	0.51	0.59	**0.67**	0.75	0.36	0.44	0.51	0.58
		PI	1.59	1.59	1.59	1.59	1.59	1.59	1.59	1.59	1.60	1.60	**1.60**	1.60	1.61	1.61	1.61	1.61
	40	TC	4.07	4.07	4.12	4.16	4.33	4.33	4.33	4.33	4.47	4.47	4.52	4.47	4.83	4.83	4.83	4.83
		S/T	0.74	0.84	0.93	1.00	0.59	0.68	0.77	0.86	0.52	0.60	0.69	0.78	0.36	0.44	0.52	0.90
		PI	1.75	1.75	1.75	1.75	1.76	1.76	1.76	1.76	1.76	1.76	1.76	1.76	1.78	1.78	1.78	1.78
	46	TC	3.76	3.76	3.79	3.82	4.02	4.02	4.02	4.02	4.16	4.16	4.16	4.16	4.51	4.51	4.51	4.51
		S/T	0.75	0.85	0.95	1.00	0.59	0.69	0.78	0.87	0.52	0.61	0.70	0.79	0.35	0.44	0.52	0.92
		PI	1.95	1.95	1.95	1.95	1.96	1.96	1.96	1.96	1.96	1.96	1.96	1.96	1.98	1.98	1.98	1.98
	50	TC	3.53	3.53	3.56	3.59	3.79	3.79	3.79	3.82	3.90	3.90	3.90	3.90	4.25	4.25	4.25	4.25
		S/T	0.77	0.87	0.97	1.00	0.60	0.70	0.80	0.89	0.52	0.62	0.72	0.81	0.35	0.44	0.53	0.97
		PI	2.11	2.11	2.11	2.11	2.12	2.12	2.12	2.12	2.13	2.13	2.13	2.13	2.14	2.14	2.14	2.14

TC:Total Cooling Capacity (kW)

S/T:Sensible Cooling Capacity Ratio

PI:Power Input(kW)

Note: The table shows the case where the operation frequency of a compressor is fixed.

7.2 Heating

12k						[SI_Unit]			
INDOOR AIRFLOW (CMH)	HEATING PERFORMANCE AT INDOOR DRY BULB TEMPERATURE								
	OUTDOOR DB(°C)	TC:TOTAL CAPACITY IN KILOWATTS (KW)				PI:TOTAL POWER IN KILOWATTS (KW)			
		Indoor Conditions (DB °C)				Indoor Conditions (DB °C)			
		16.0	20.0	22.0	24.0	16.0	20.0	22.0	24.0
386	-15.0	2.47	2.45	2.45	2.42	1.17	1.21	1.19	1.20
	-10.0	2.64	2.61	2.61	2.59	1.25	1.29	1.27	1.28
	-7.0	2.77	2.74	2.74	2.71	1.32	1.37	1.35	1.36
	-5.6	2.86	2.83	2.83	2.80	1.29	1.31	1.32	1.32
	-2.8	2.94	2.91	2.91	2.88	1.24	1.25	1.26	1.27
	0.0	3.00	2.97	2.94	2.94	1.18	1.20	1.20	1.21
	2.8	3.18	3.15	3.12	3.09	1.15	1.16	1.16	1.17
	5.6	3.44	3.41	3.38	3.35	1.11	1.11	1.12	1.12
	7.0	3.73	3.69	3.61	3.58	1.09	1.07	1.10	1.10
	11.1	3.93	3.87	3.84	3.81	1.02	1.02	1.02	1.02
	13.9	4.07	4.04	4.01	3.98	0.97	0.97	0.97	0.97
	16.7	4.25	4.19	4.16	4.13	0.92	0.92	0.91	0.91
	18.0	4.33	4.28	4.25	4.22	0.89	0.89	0.89	0.89
466	-15.0	2.54	2.51	2.49	2.49	1.18	1.22	1.20	1.21
	-10.0	2.71	2.68	2.65	2.65	1.26	1.30	1.28	1.29
	-7.0	2.84	2.81	2.78	2.78	1.34	1.38	1.36	1.37
	-5.6	2.94	2.91	2.88	2.88	1.30	1.32	1.33	1.34
	-2.8	3.03	3.00	2.97	2.97	1.25	1.26	1.27	1.28
	0.0	3.09	3.03	3.03	3.00	1.20	1.21	1.21	1.22
	2.8	3.26	3.20	3.18	3.18	1.16	1.17	1.17	1.17
	5.6	3.53	3.50	3.47	3.44	1.12	1.12	1.13	1.13
	7.0	3.81	3.78	3.69	3.66	1.10	1.08	1.11	1.11
	11.1	4.01	3.96	3.93	3.90	1.03	1.03	1.03	1.03
	13.9	4.19	4.13	4.10	4.07	0.98	0.98	0.98	0.98
	16.7	4.33	4.28	4.25	4.22	0.93	0.92	0.92	0.92
	18.0	4.42	4.36	4.33	4.30	0.90	0.90	0.90	0.90
550	-15.0	2.55	2.53	2.53	2.50	1.19	1.24	1.22	1.23
	-10.0	2.72	2.70	2.70	2.67	1.27	1.32	1.30	1.31
	-7.0	2.85	2.83	2.83	2.80	1.35	1.40	1.38	1.39
	-5.6	2.94	2.91	2.91	2.88	1.32	1.34	1.34	1.35
	-2.8	3.06	3.00	3.00	2.97	1.27	1.28	1.29	1.29
	0.0	3.12	3.06	3.06	3.03	1.21	1.22	1.23	1.23
	2.8	3.26	3.23	3.20	3.18	1.17	1.17	1.18	1.18
	5.6	3.55	3.53	3.50	3.47	1.13	1.14	1.14	1.14
	7.0	3.84	3.81	3.72	3.69	1.11	1.09	1.12	1.12
	11.1	4.04	3.98	3.96	3.93	1.03	1.04	1.04	1.04
	13.9	4.22	4.16	4.13	4.10	0.98	0.98	0.98	0.98
	16.7	4.39	4.33	4.30	4.25	0.93	0.93	0.93	0.93
	18.0	4.45	4.39	4.36	4.33	0.91	0.91	0.90	0.90

Note: The table shows the case where the operation frequency of a compressor is fixed.

16k									[SI_Unit]
INDOOR AIRFLOW (CMH)	HEATING PERFORMANCE AT INDOOR DRY BULB TEMPERATURE								
	OUTDOOR DB(°C)	TC:TOTAL CAPACITY IN KILOWATTS (KW)				PI:TOTAL POWER IN KILOWATTS (KW)			
		Indoor Conditions (DB °C)				Indoor Conditions (DB °C)			
		16.0	20.0	22.0	24.0	16.0	20.0	22.0	24.0
400	-15.0	3.86	3.81	3.81	3.78	1.66	1.72	1.69	1.70
	-10.0	4.12	4.07	4.07	4.04	1.77	1.84	1.81	1.82
	-7.0	4.32	4.26	4.26	4.23	1.88	1.95	1.92	1.93
	-5.6	4.32	4.26	4.26	4.23	1.84	1.86	1.87	1.89
	-2.8	4.32	4.26	4.26	4.23	1.76	1.78	1.79	1.80
	0.0	4.29	4.23	4.21	4.18	1.69	1.70	1.71	1.72
	2.8	4.38	4.32	4.29	4.26	1.63	1.64	1.64	1.65
	5.6	4.64	4.58	4.55	4.52	1.56	1.57	1.58	1.58
	7.0	4.90	4.84	4.78	4.75	1.55	1.52	1.56	1.56
	11.1	5.01	4.95	4.92	4.90	1.44	1.45	1.45	1.45
	13.9	5.13	5.04	5.01	4.98	1.37	1.37	1.37	1.37
	16.7	5.21	5.16	5.10	5.07	1.30	1.30	1.30	1.30
	18.0	5.27	5.19	5.16	5.13	1.27	1.27	1.26	1.26
480	-15.0	3.92	3.90	3.87	3.85	1.68	1.74	1.71	1.72
	-10.0	4.19	4.16	4.14	4.11	1.79	1.85	1.83	1.84
	-7.0	4.39	4.36	4.33	4.30	1.90	1.97	1.94	1.95
	-5.6	4.41	4.38	4.35	4.32	1.86	1.88	1.89	1.90
	-2.8	4.41	4.38	4.35	4.32	1.78	1.80	1.81	1.82
	0.0	4.38	4.32	4.29	4.26	1.71	1.72	1.73	1.74
	2.8	4.47	4.41	4.38	4.35	1.64	1.66	1.66	1.67
	5.6	4.73	4.67	4.61	4.58	1.58	1.59	1.60	1.60
	7.0	4.99	4.92	4.87	4.84	1.56	1.54	1.58	1.58
	11.1	5.10	5.04	5.01	4.98	1.46	1.46	1.47	1.47
	13.9	5.21	5.13	5.10	5.07	1.39	1.39	1.39	1.39
	16.7	5.30	5.24	5.19	5.16	1.32	1.32	1.32	1.31
	18.0	5.36	5.27	5.24	5.19	1.29	1.28	1.28	1.28
560	-15.0	3.99	3.94	3.94	3.91	1.69	1.76	1.73	1.74
	-10.0	4.26	4.21	4.21	4.18	1.81	1.87	1.84	1.85
	-7.0	4.47	4.41	4.41	4.38	1.92	1.99	1.96	1.97
	-5.6	4.47	4.41	4.41	4.38	1.88	1.90	1.91	1.92
	-2.8	4.47	4.41	4.38	4.38	1.80	1.82	1.83	1.84
	0.0	4.41	4.35	4.35	4.32	1.72	1.74	1.75	1.75
	2.8	4.52	4.47	4.44	4.41	1.66	1.67	1.68	1.68
	5.6	4.76	4.70	4.67	4.64	1.60	1.60	1.61	1.61
	7.0	5.04	4.98	4.92	4.90	1.58	1.55	1.59	1.59
	11.1	5.16	5.10	5.07	5.04	1.47	1.47	1.48	1.48
	13.9	5.27	5.19	5.16	5.13	1.40	1.40	1.40	1.40
	16.7	5.39	5.30	5.24	5.21	1.33	1.33	1.32	1.32
	18.0	5.42	5.33	5.30	5.27	1.30	1.29	1.29	1.29

Note: The table shows the case where the operation frequency of a compressor is fixed.

8. Noise Criterion Curves

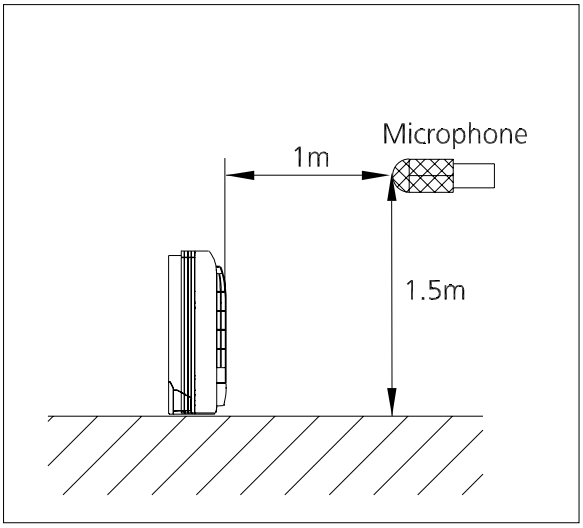

Notes:

-Sound measured at 1.5m away from the noisiest location of the unit.

-Data is valid at free field condition

-Data is valid at nominal operation condition

-Reference acoustic pressure OdB = 20μPa

-Sound level will vary depending on a range of factors such as the construction -(acoustic absorption coefficient) of particular room in which the equipment is installed.

-The operating conditions are assumed to be standard.

XDMX-035N-09M25

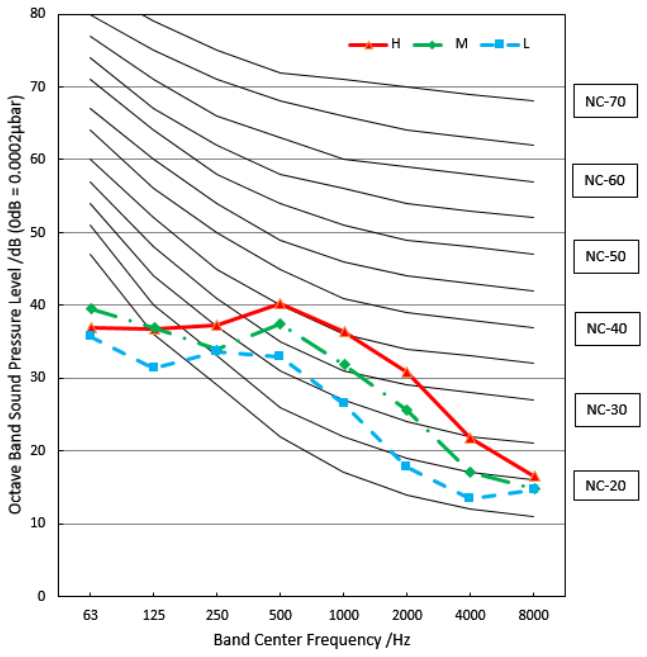

XDMX-050N-09M25

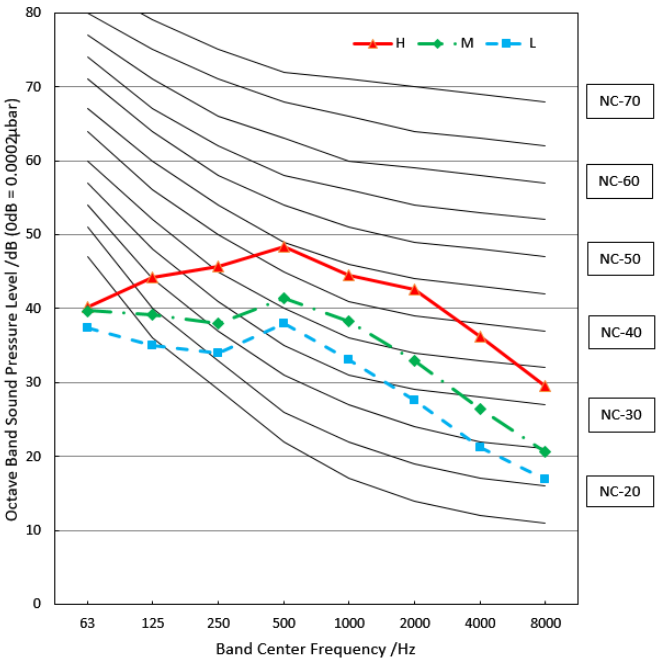

9. Electrical Characteristics

Capacity (Btu/h)		12k~18k
OUDOOR UNIT POWER	Phase	1-phase
	Frequency and Voltage	220-240V, 50Hz
	Power Wiring (mm^2)	3×1.5
	Circuit Breaker/ Fuse (A)	25/20
Indoor/Outdoor Connecting Wiring	Weak Electric Signal)(mm^2)	
	Strong Electric Signal(mm^2)	4×1.0

10. Electrical Wiring Diagrams

IDU Model	IDU Wiring Diagram
XDMX-035N-09M25	16022700002988
XDMX-050N-09M25	

Abbreviation	Paraphrase
Y/G	Yellow-Green Conductor
FAN	Indoor Direct Current FAN
M1	Upper Outlet Swing Motor
M2	Lower Outlet Swing Motor
L	LIVE
N	NEUTRAL
TO CCM Comm.Bus	Central Controller
RT1	Indoor Room Temperature
RT2	Coil Temperature of Indoor Heat Exchanger
XP1-XP5, XS1-XS5	Connectors
XT1	4-Way Terminal

Indoor unit wiring diagram: 16022700002988

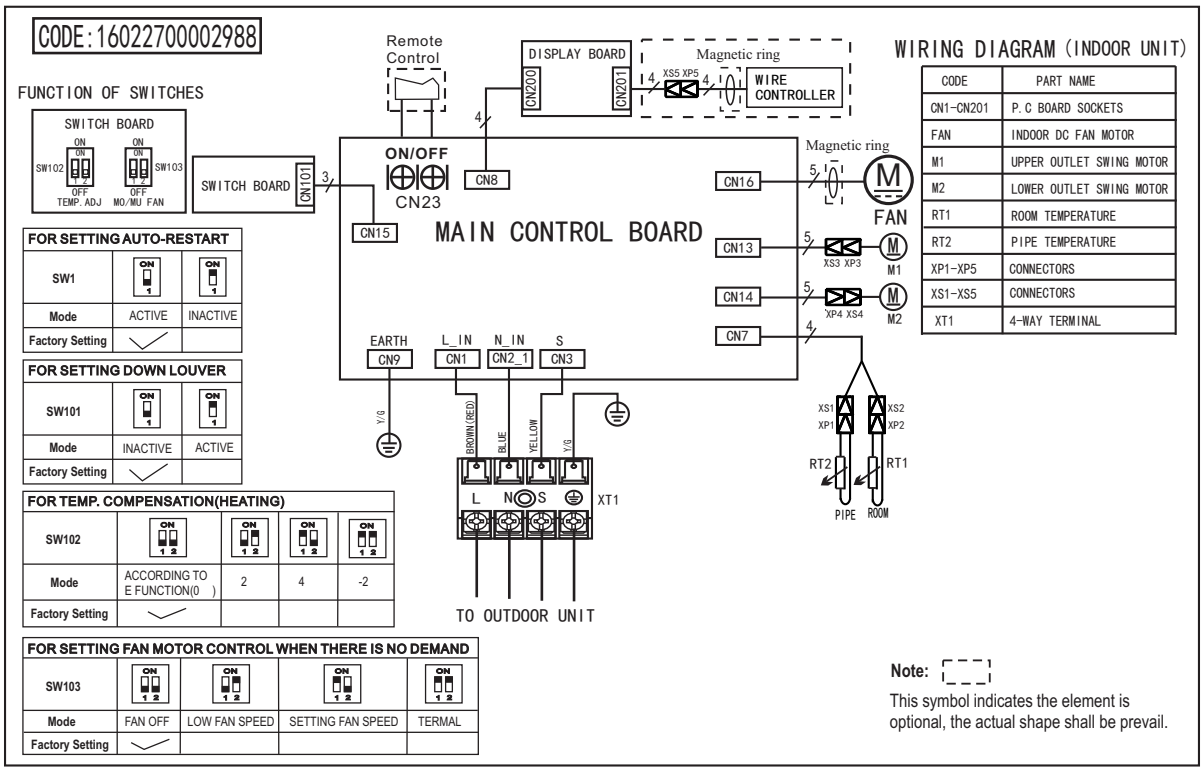

10.2 Micro-Switch Introduce:



For Setting Auto-Restart		
SW1	ON 1	ON 1
Mode	ACTIVE	INACTIVE
Factory Setting	✓	

A. Micro-switch SW1 is for selection of auto-restart function.

Range: Active, inactive



For Setting Down louver		
SW101	ON 1	ON 1
Mode	INACTIVE	ACTIVE
Factory Setting	✓	

B. Take off the panel, you can see the switch SW101 which is used for selecting both air outlets or upper air outlet only.

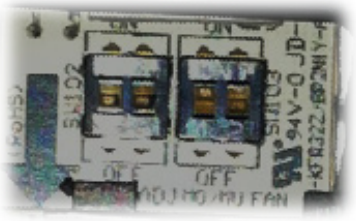

FOR TEMP. COMPENSATION(HEATING)				
SW102	ON 1 2	ON 1 2	ON 1 2	ON 1 2
Mode	According to E Function (0℃)	2℃	4℃	-2℃
Factory Setting	✓			

C. Micro-switch SW102 is for selection of temperature compensation in heating mode. This helps to reduce the real temperature difference between ceiling and floor so that the unit could run properly. If the unit is on-floor installed, 0 should be chosen.

Range: E function (reserved for special customizing) /0°C, 2°C, 4°C, -2°C

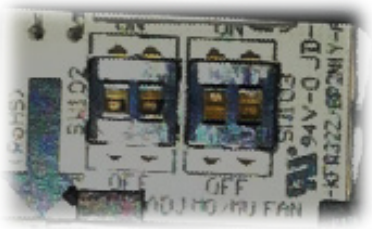

For Setting Fan Motor Control then No Power Request				
SW103	ON 1 2	ON 1 2	ON 1 2	ON 1 2
Mode	FAN OFF	LOW FAN SPEED	SETTING FAN SPEED	TERMAL
Factory Setting	✓			

D. Micro-switch SW103 is for selection of indoor FAN ACTION if room temperature reaches the setponit and the compressor stops.

Range: OFF (in 127s), Low Speed, Setting Speed, Termal (runs for 1 minute ever 4-minute stop).

10.1 Micro-Switch Introduce:

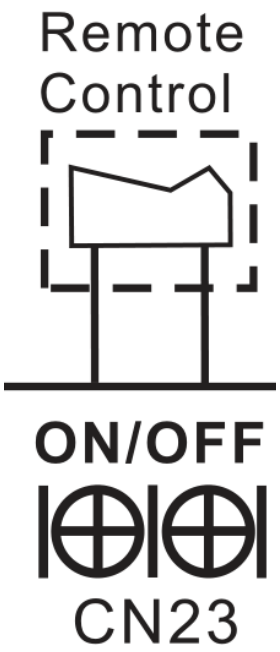

A. For remote control (ON-OFF) terminal port CN23 and short connector of JR6

1. Remove the short connector of JR6 when you use ON-OFF function;
2. When remote switch off (OPEN); the unit would be off;
3. When remote switch on (CLOSE); the unit would be on;
4. When close/open the remote switch, the unit would be responded the demand within 2 seconds;
5. When the remote switch on, you can use remote controller/ wire controller to select the mode what you want; when the remote switch off, the unit would not respond the demand from remote controller/wire controller.
when the remote switch off, but the remote controller/wire controller are on, CP code would be shown on the display board.
6. The voltage of the port is 12V DC, design Max. current is 5mA.

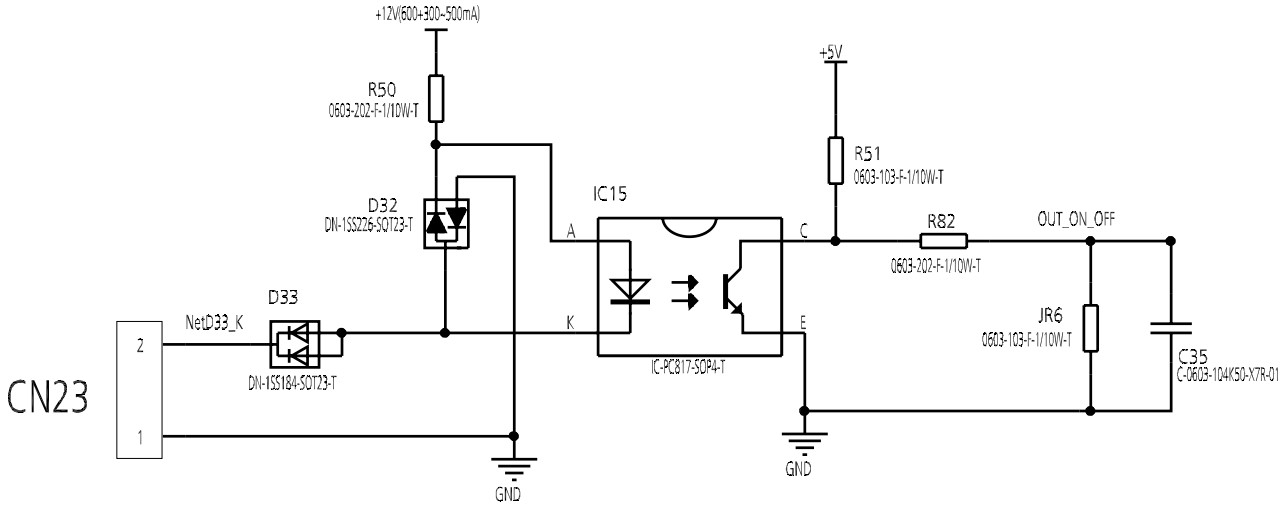

Indoor Unit-Compact Cassette

Contents

1. Feature....2
2. Dimensional Drawings....4
3. Part names....5
4. Service Place....6
5. Accessories....7
6 Air Velocity and Temperature Distributions....8
7. Capacity Tables....16
8. Noise Criterion Curves....22
9. Electrical Characteristics....23
10. Electrical Wiring Diagrams....23

1. Feature

1.1 Compact design

- The body size is 570×260×570mm, it's just smaller than the ceiling board, so it's very easy for installation and will not damage the decoration. The panel size is 647×50×647mm.
- The hooks are designed in the four corners of the body, which can save installation space.

1.2 Fire-proof Controller Box

- Electrical control box adopts new design which can meet higher fire safety requirements.

1.3 Reserved remote on-off and alarm ports(Optional for fixed-speed units, standard for inverter units)

- Remote on-off: With the reserved ports. a remote switch can be easily connected to realize remote control.
- Alarm: The built-in PCB can output alarm signal, which achieve setting up an external alarm light or vibration gauge possible.



1.4 Build-in Drain Pump

- The drain pump can lift the condensed water up to 750mm.
- It's convenient to install drainage piping under most space condition.

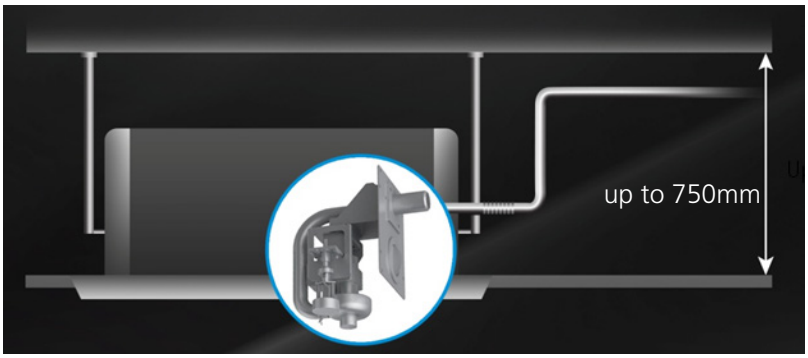

1.5 Fresh Air

- Fresh air intake function brings you fresh and comfortable air feeling.



1.6 Wired Controller(Optional)

- Compared with infrared remote controller, wired controller can be fixed on the wall and avoid mislaying. It's mainly used for commercial zone and makes air conditioner control more convenient.

1.7 Louver Position Memory (Standard for ERP models)

- When you start the unit next time, the angle of horizontal louver will automatically move to the same position as you set last time.

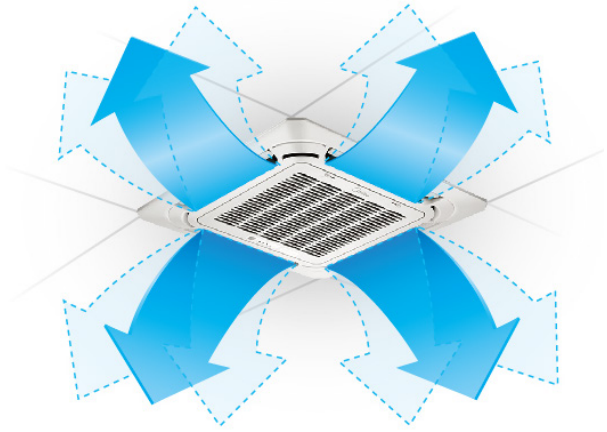

Previous Air-Flow Angle

2. Dimensional Drawings

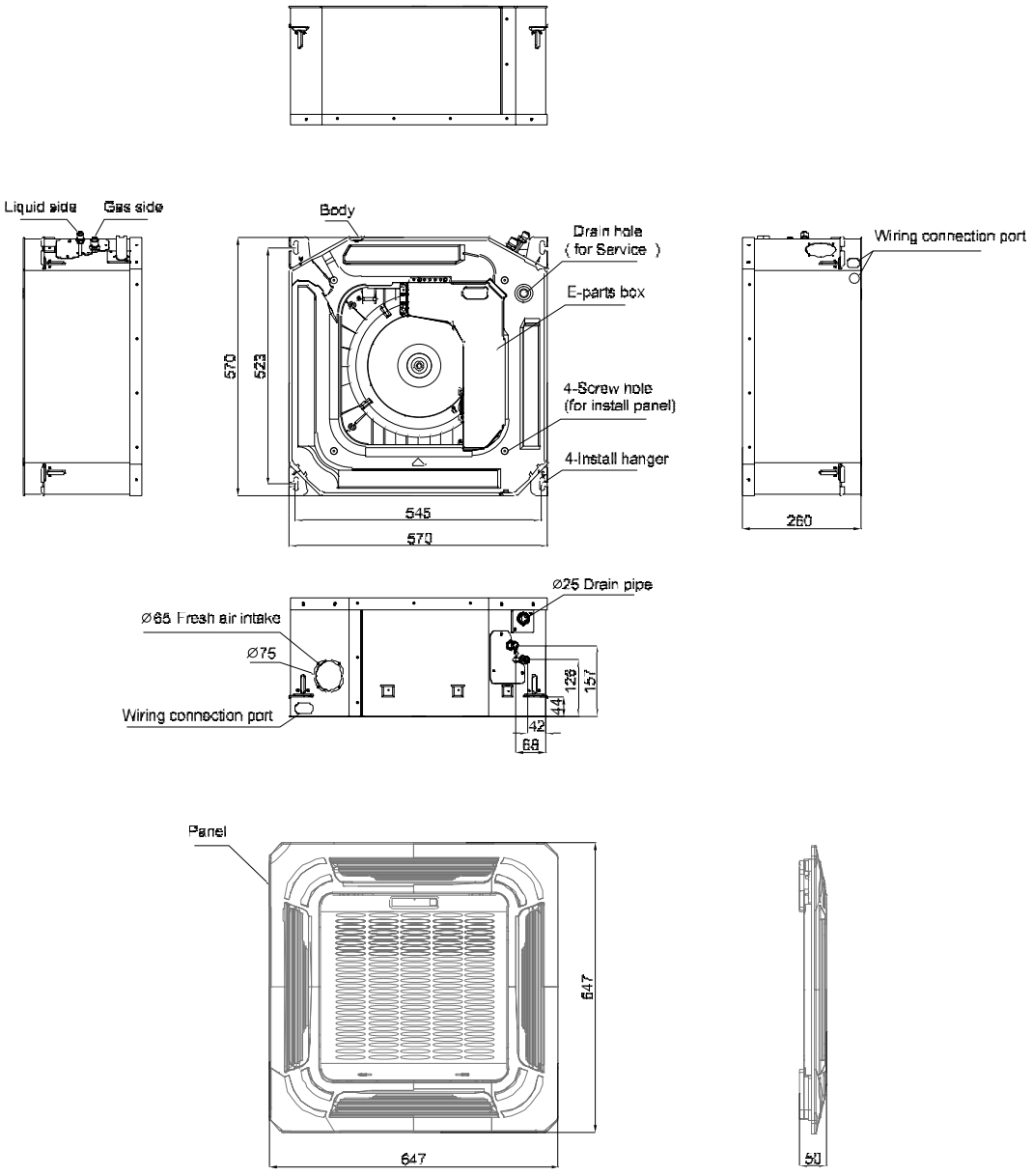

3. Part names

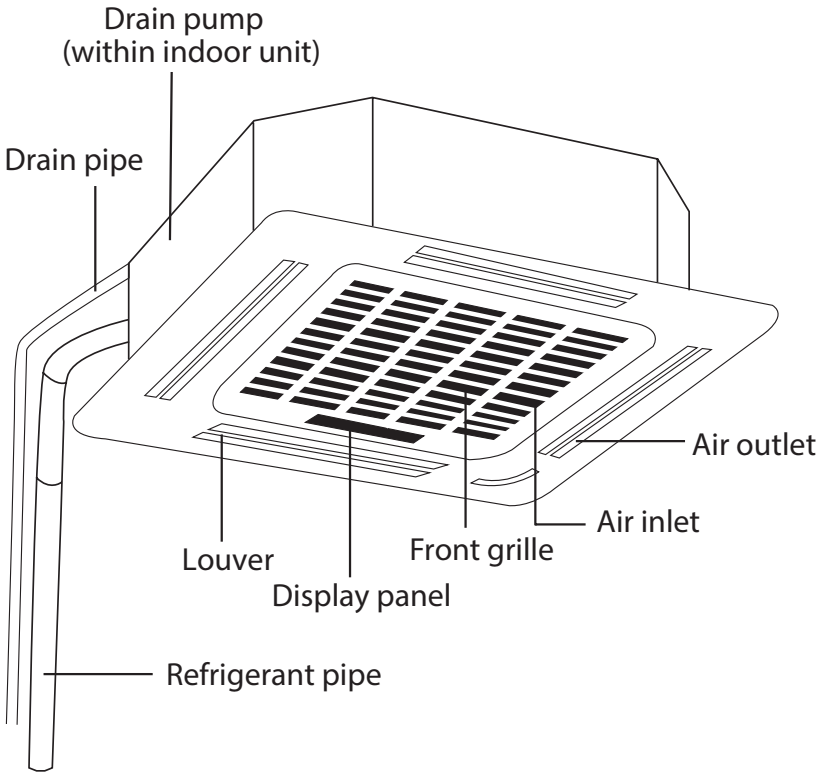
Drain pump
(within indoor unit)
Drain pipe
Air outlet
Air inlet
Front grille
Louver
Display panel
Refrigerant pipe

4. Service Place

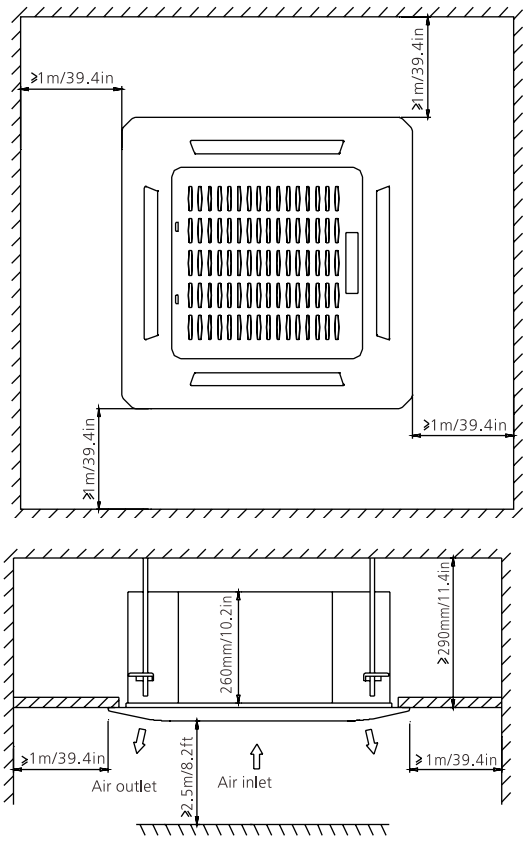

5. Accessories

The air conditioning system comes with the following accessories. Use all of the installation parts and accessories to install the air conditioner. Improper installation may result in water leakage, electrical shock and fire, or equipment failure.

	Name	Shape	Quantity
Indoor unit installation	Installation paper template (some models)	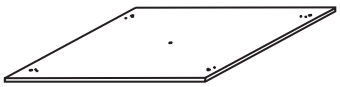	1
Refrigeration Fittings	Insulation for gas pipe fitting (some models)		1
	Insulation for liquid pipe fitting (some models)		1
Drainpipe Fittings	Outlet pipe sheath(some models)		1
	Outlet pipe clasp(some models)		1
	Drain joint (some models)	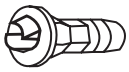	1
	Seal ring (some models)	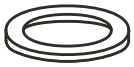	1
EMC Magnetic Ring (some models)	Magnetic ring (wrap the electric wires S1 & S2 (P & Q & E) around the magnetic ring twice)	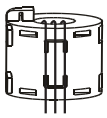	1
	Magnetic ring (Hitch it on the connective cable between indoor unit and outdoor unit after installation.)	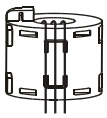	1
Installation Accessory (some models)	Ceiling hook	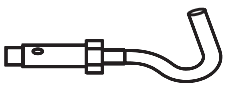	4
	Suspension bolt		4
	Throttle (some units)		1
	Anti-shock rubber		1
	Owner's manual&Installation manual		1

Optional accessories:

- There are two types of remote controls: wired and wireless.
- Select a remote controller based on customer preferences and requirements and install in an appropriate place.
- Refer to catalogues and technical literature for guidance on selecting a suitable remote controller.

6. Air Velocity and Temperature Distributions

12K

Discharge Angle 30°

Cooling airflow velocity distributions

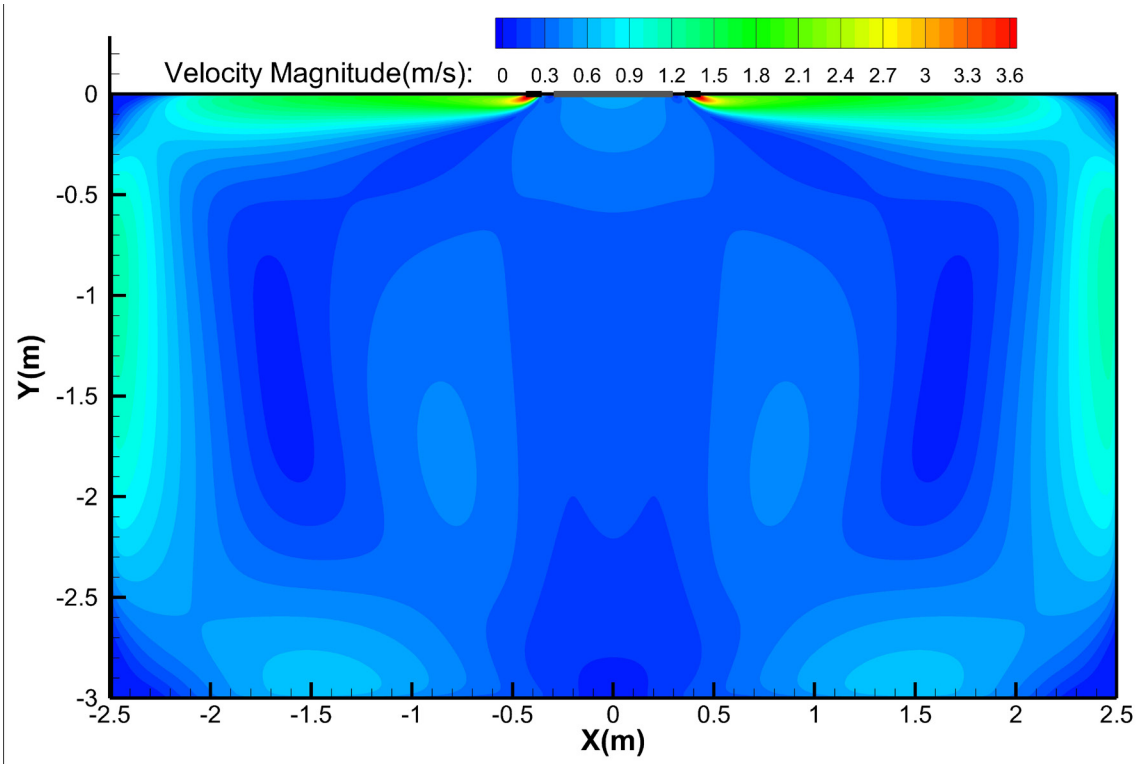

Cooling temperature distributions

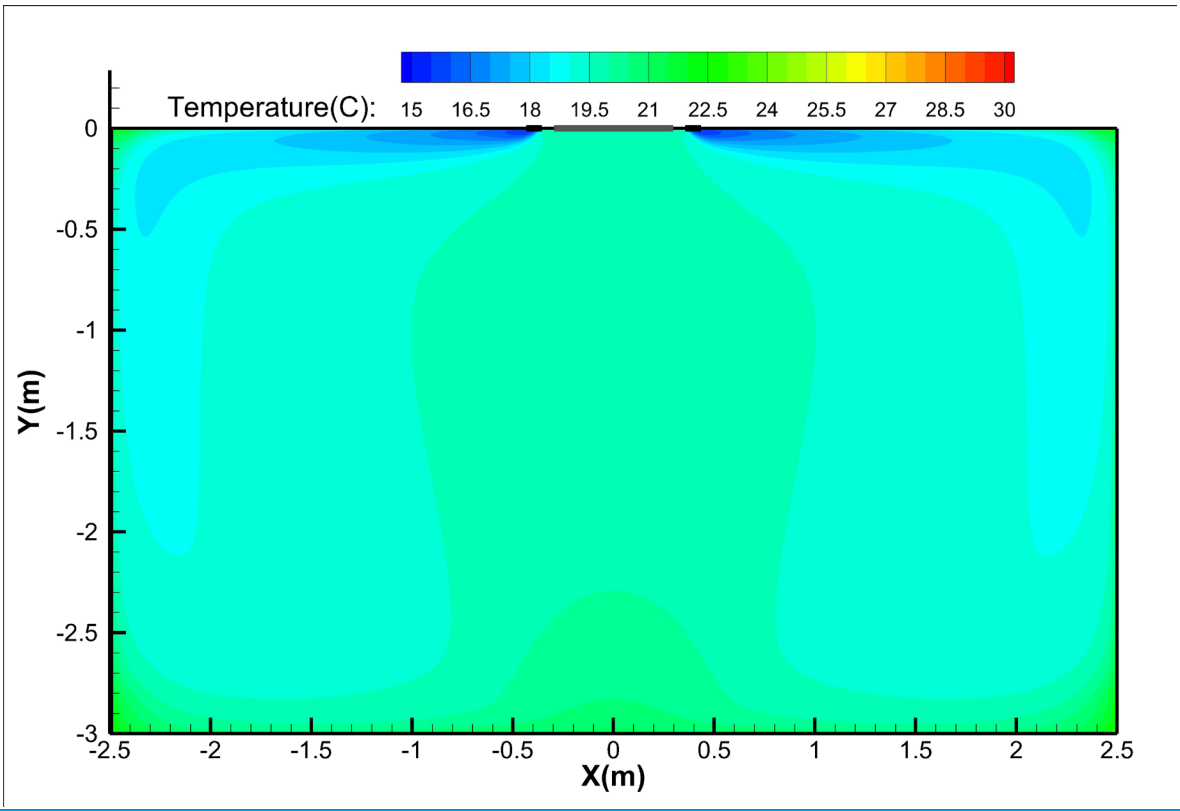

Heating airflow velocity distributions

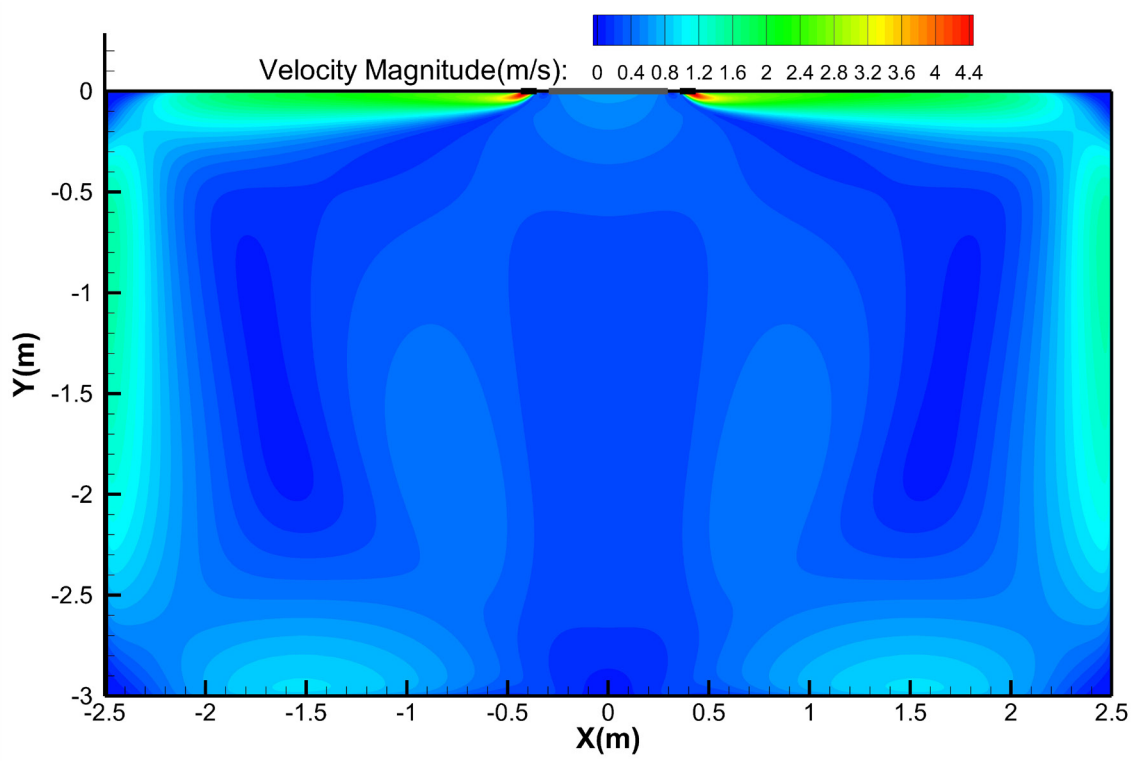

Heating temperature distributions

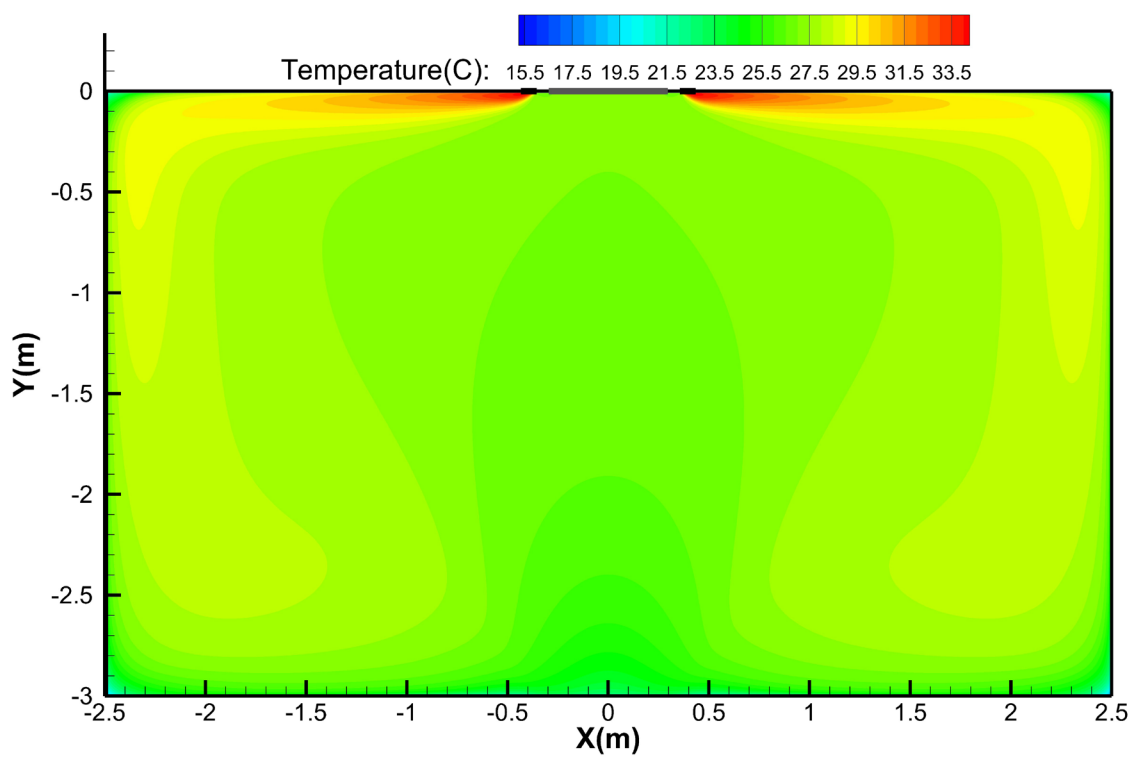

Discharge Angle 60°

Cooling airflow velocity distributions

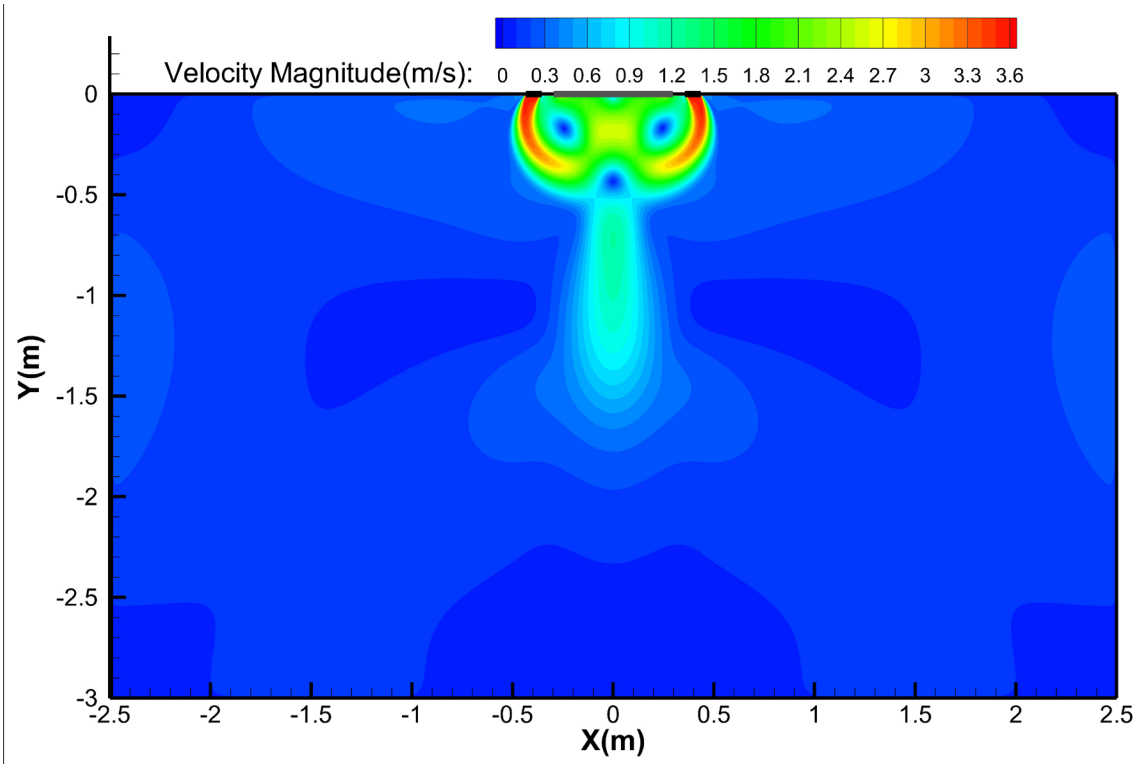

Cooling temperature distributions

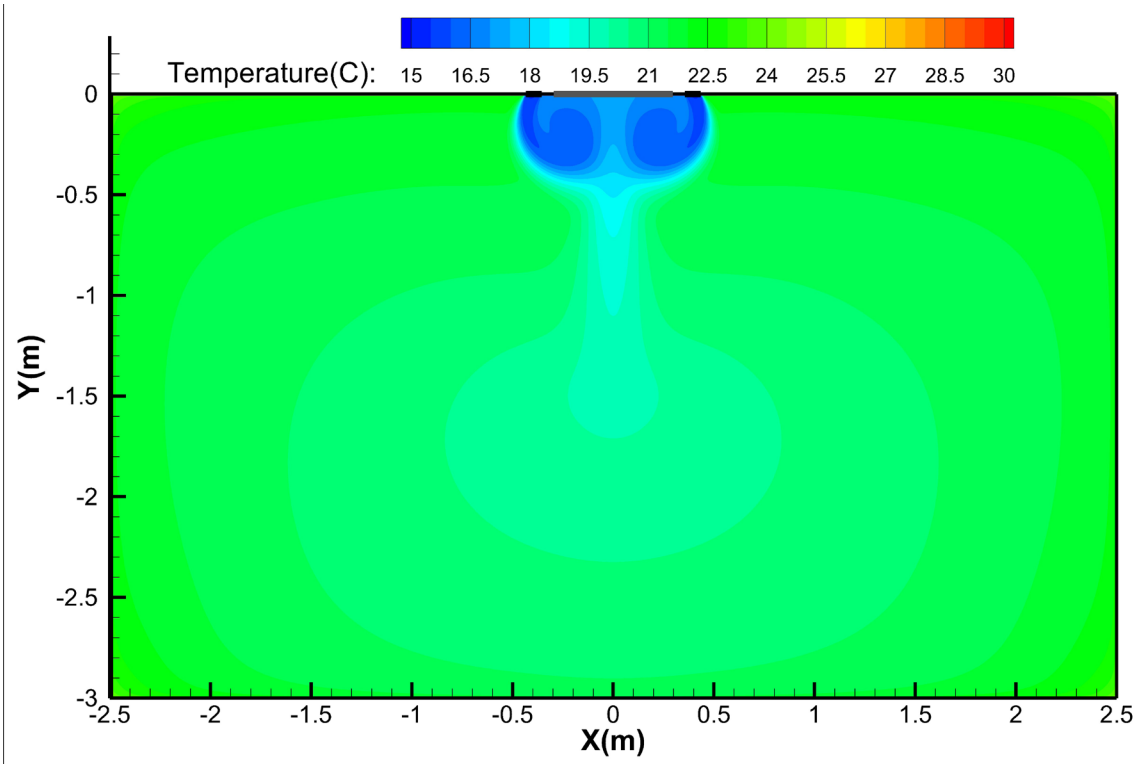

Heating airflow velocity distributions

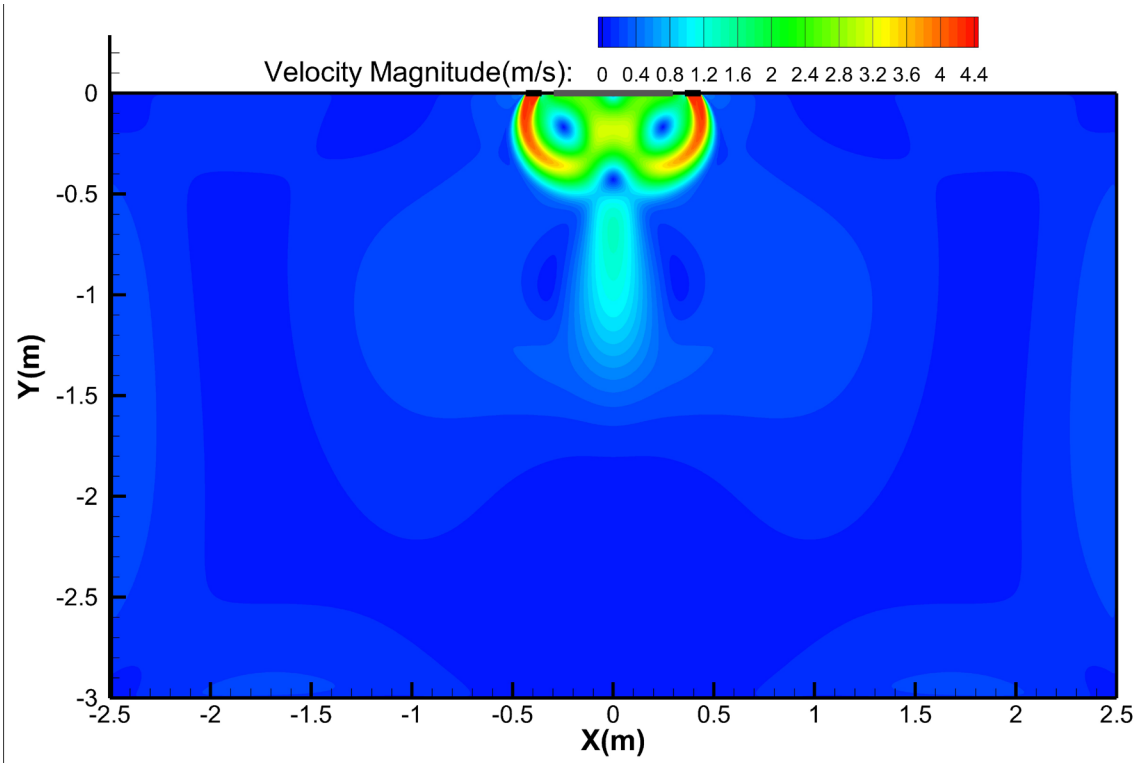

Heating temperature distributions

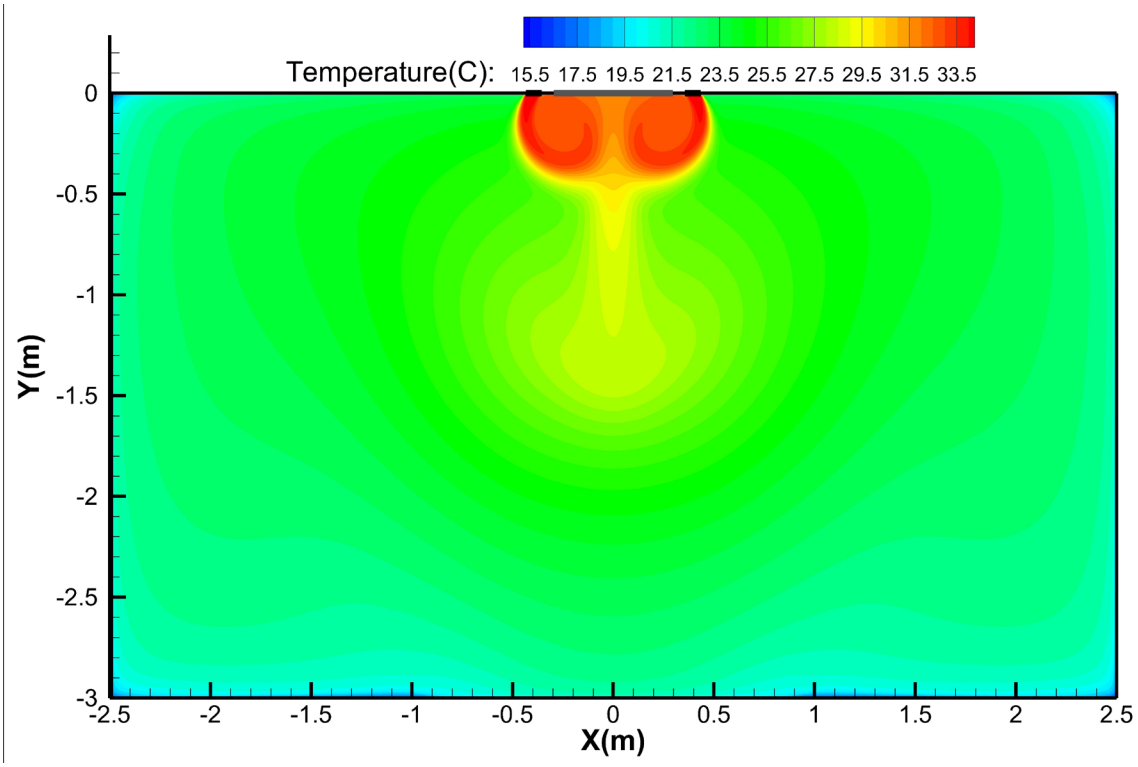

18K

Discharge Angle 30°

Cooling airflow velocity distributions

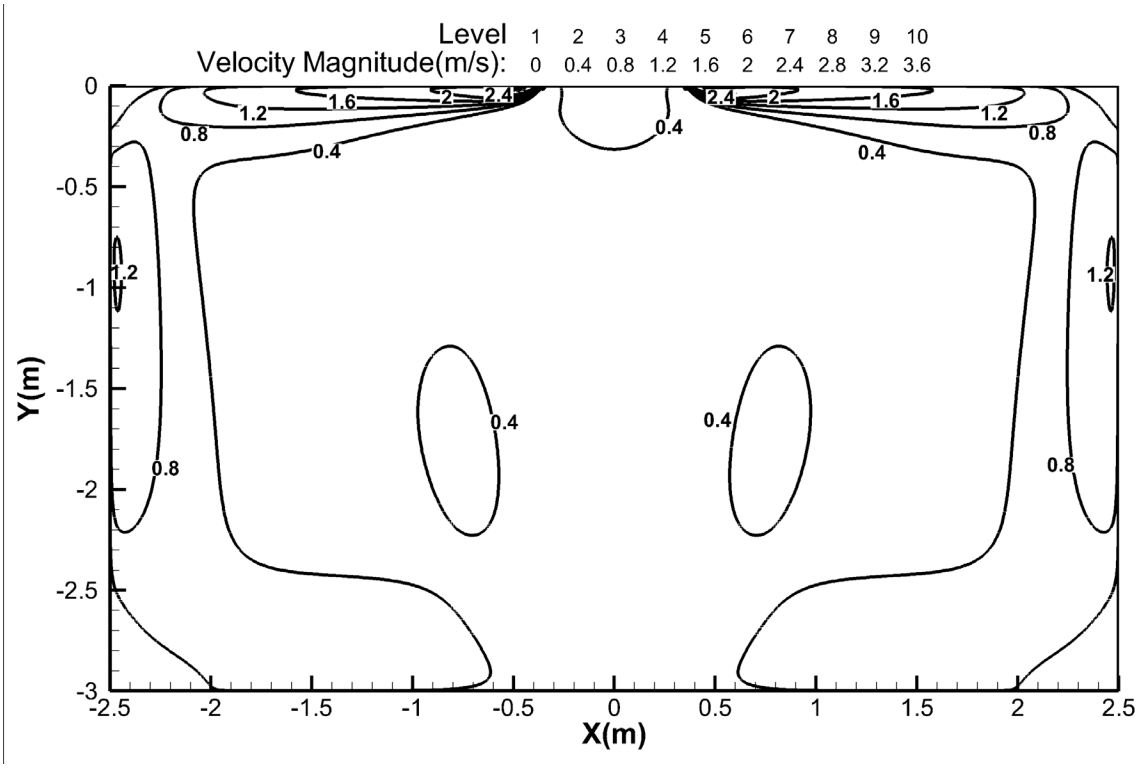

Cooling temperature distributions

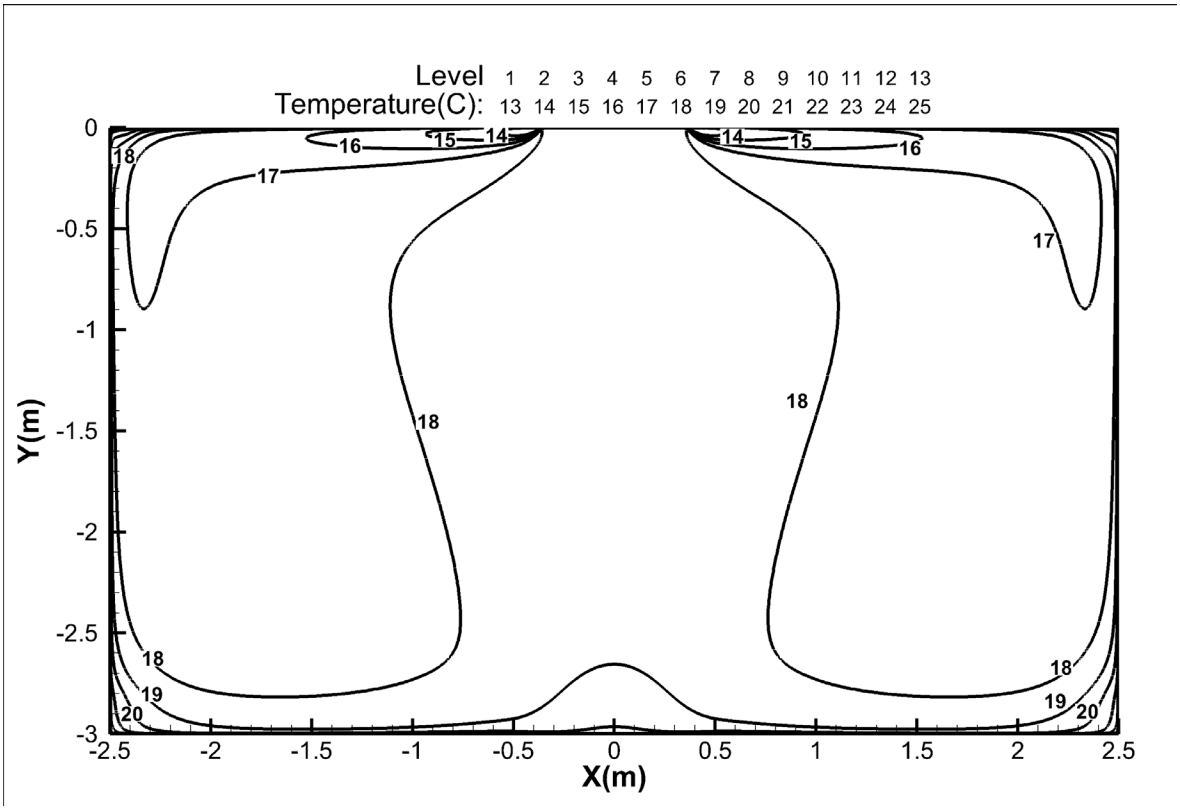

Heating airflow velocity distributions

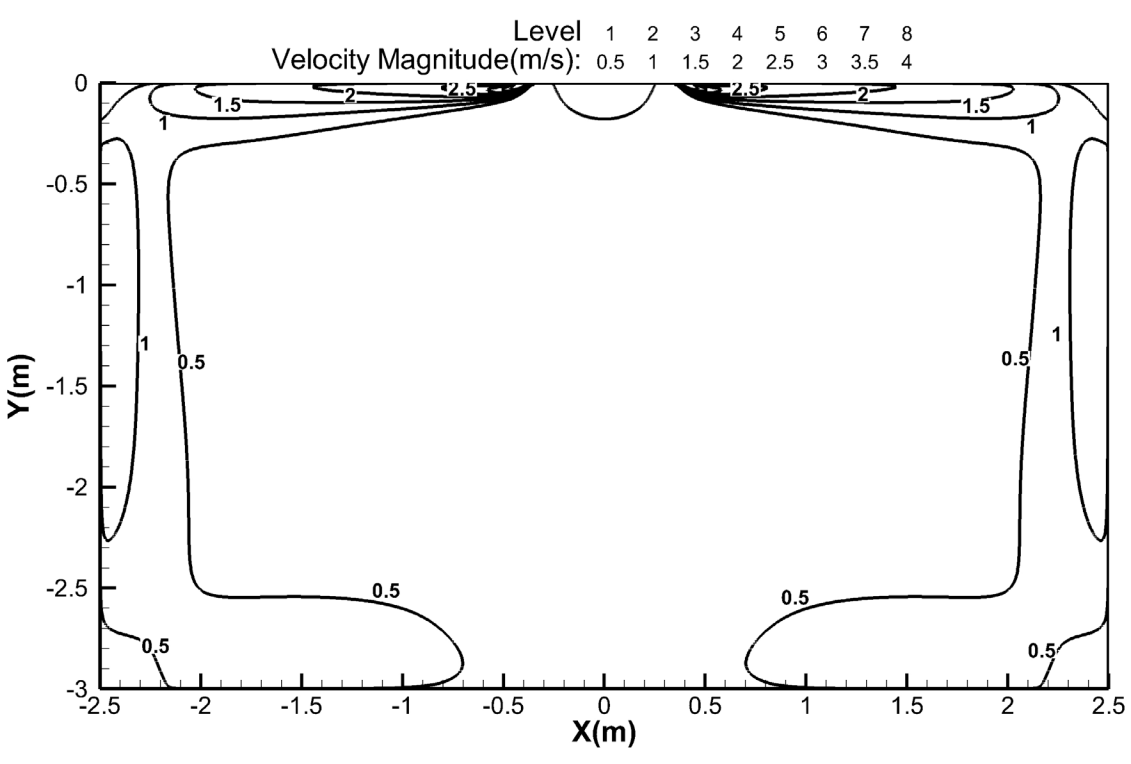

Heating temperature distributions

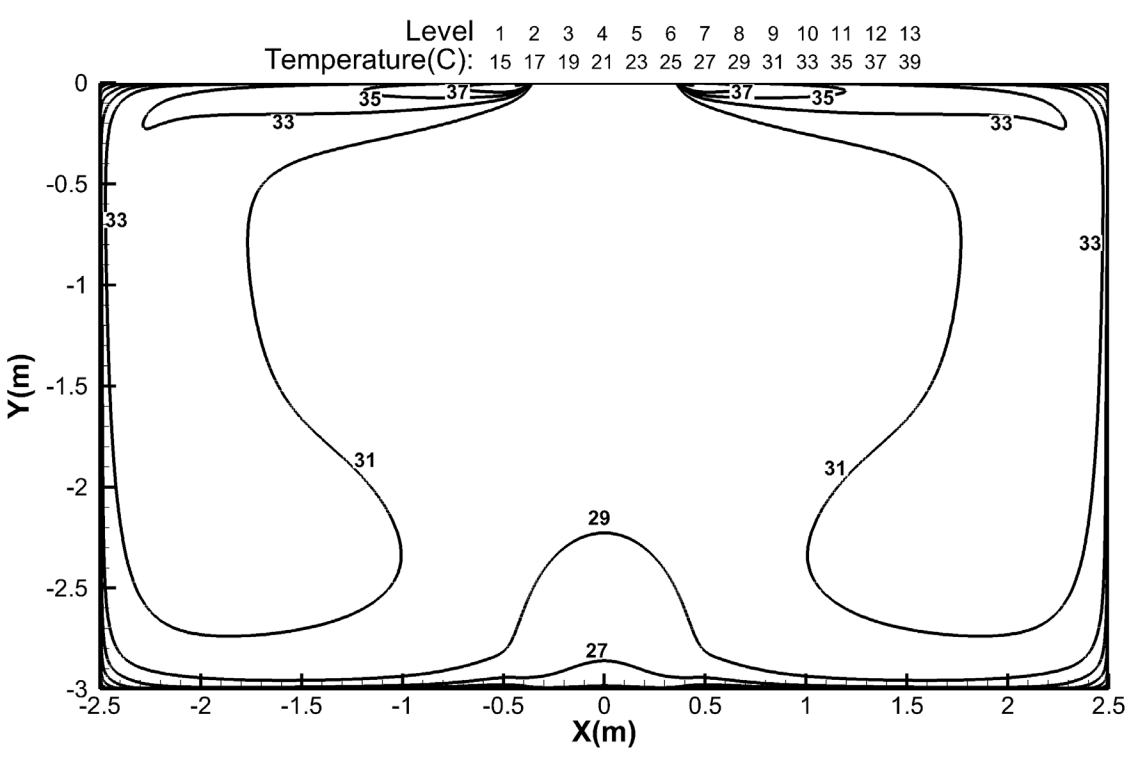

Discharge Angle 60°

Cooling airflow velocity distributions

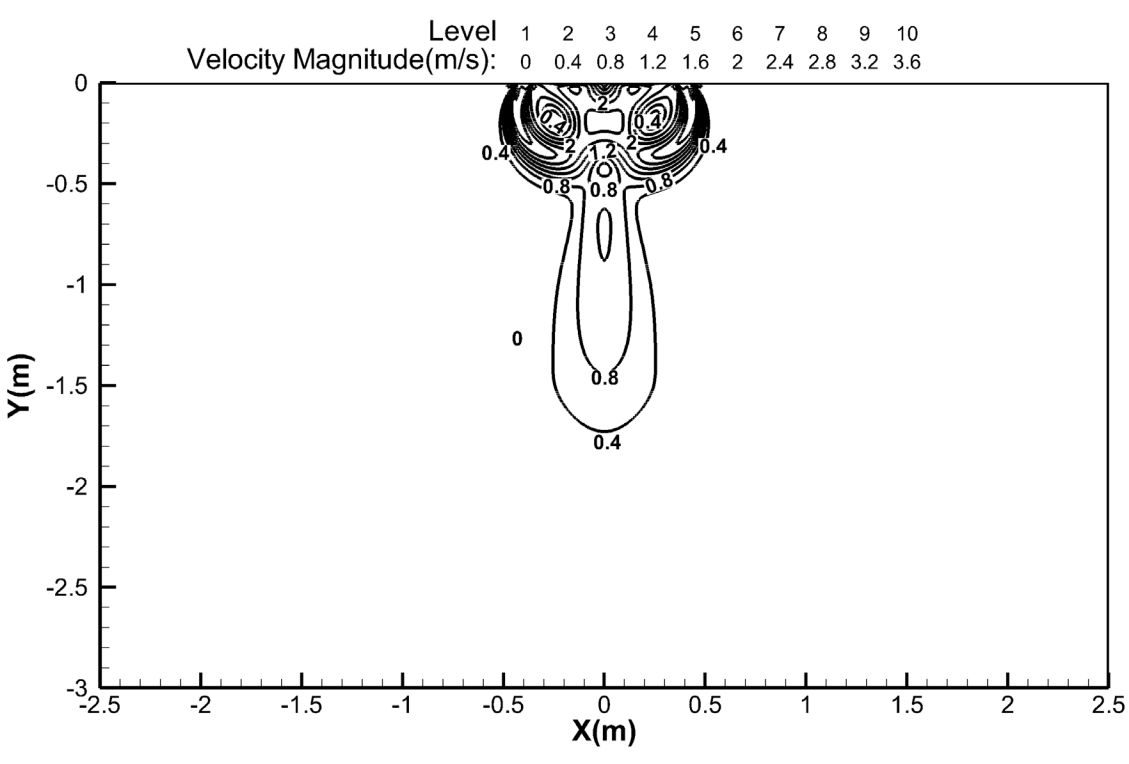

Cooling temperature distributions

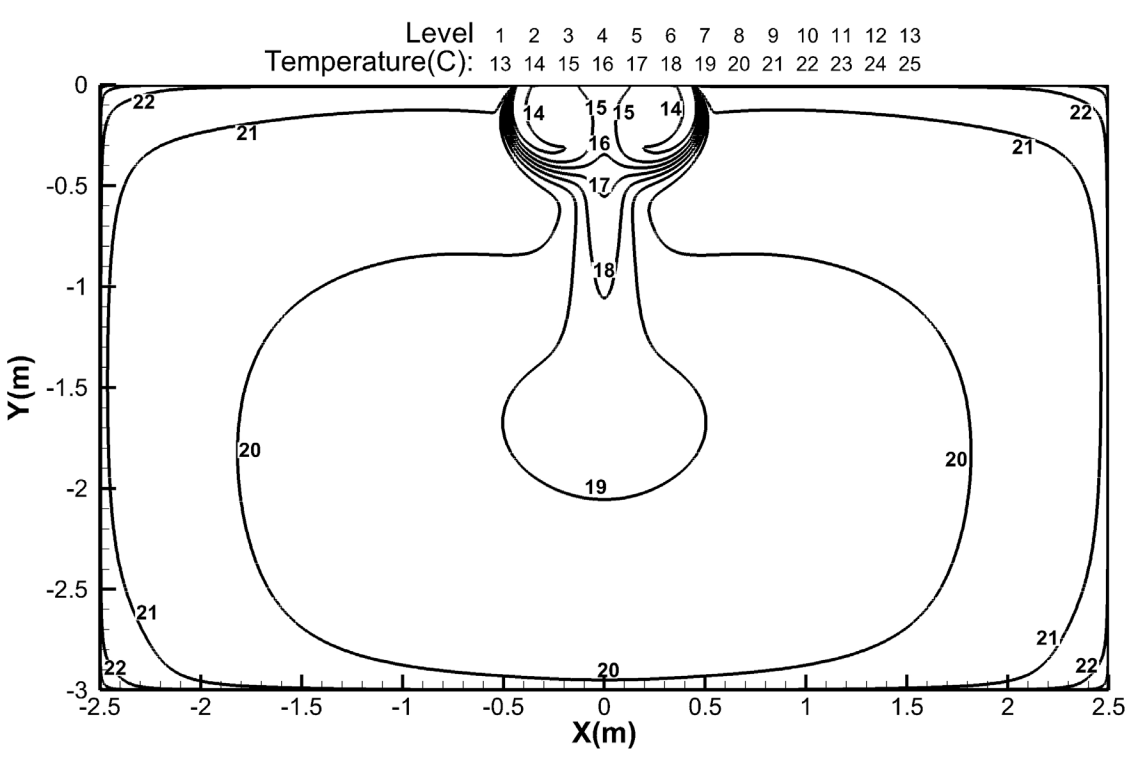

Heating airflow velocity distributions

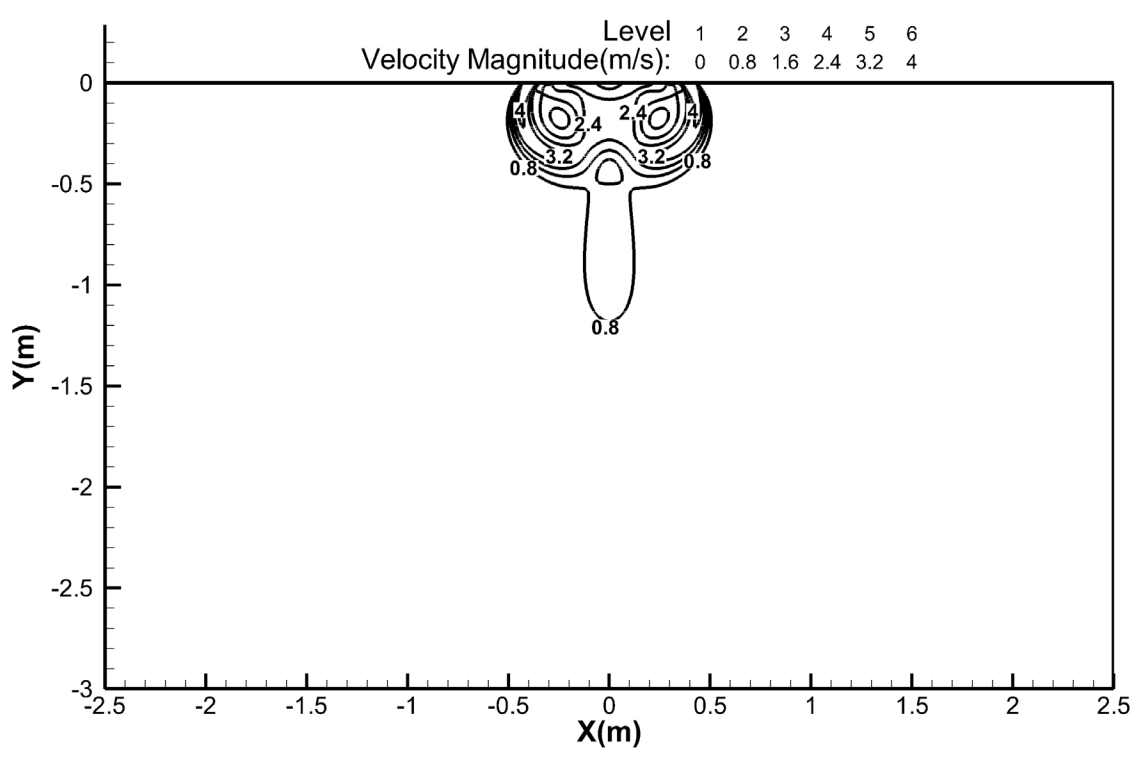

Heating temperature distributions

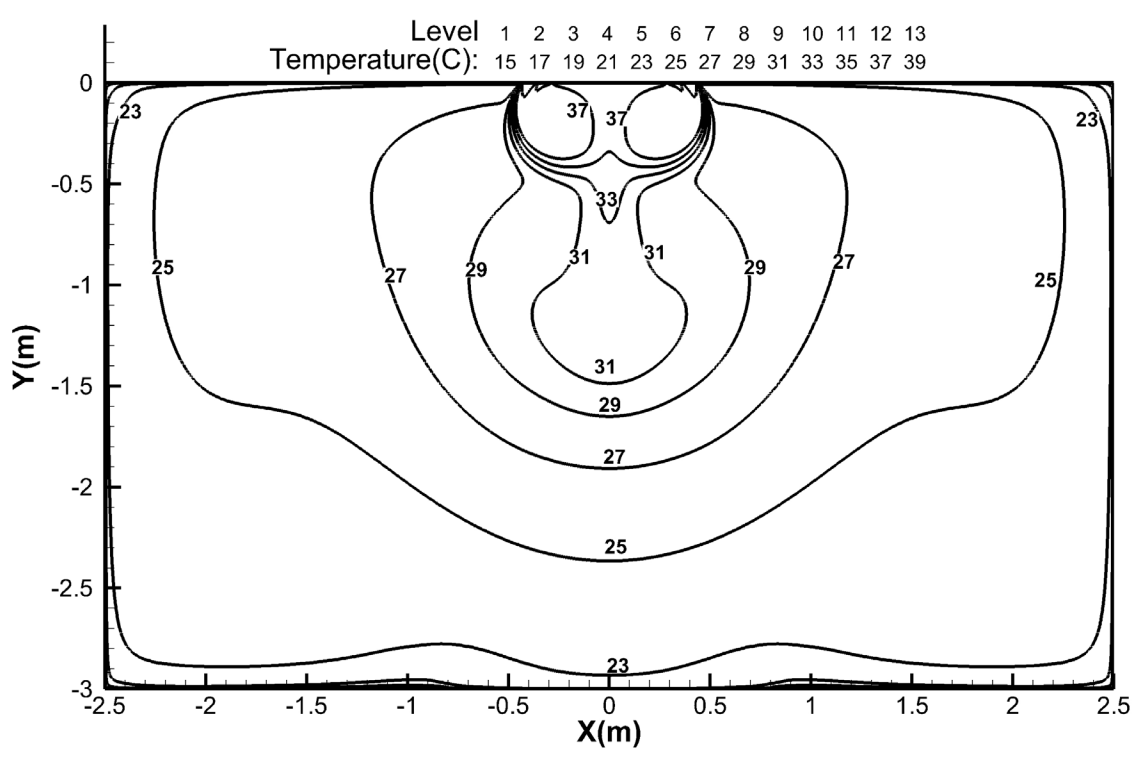

8. Capacity Tables

8.1 Cooling

12k																		
INDOOR AIRFLOW (CMH)	OUTDOOR DB(℃)	ID WB (℃)	16.0				18.0				19.0				22.0			
		ID DB (℃)	23.0	25.0	27.0	29.0	23.0	25.0	27.0	29.0	23.0	25.0	27.0	29.0	23.0	25.0	27.0	29.0
389	-15	TC	3.71	3.72	3.72	3.75	3.90	3.96	3.96	3.96	4.00	4.00	4.00	4.00	4.25	4.25	4.25	4.25
		S/T	0.68	0.74	0.81	0.88	0.55	0.62	0.69	0.75	0.49	0.56	0.63	0.70	0.37	0.42	0.48	0.54
		PI	0.67	0.68	0.68	0.67	0.67	0.67	0.67	0.67	0.67	0.67	0.67	0.67	0.67	0.67	0.67	0.67
	-10	TC	3.68	3.70	3.70	3.73	3.87	3.93	3.93	3.93	3.98	3.98	3.98	3.98	4.23	4.23	4.23	4.23
		S/T	0.68	0.75	0.82	0.88	0.55	0.62	0.69	0.76	0.49	0.56	0.63	0.70	0.37	0.43	0.49	0.54
		PI	0.67	0.67	0.67	0.67	0.67	0.67	0.67	0.67	0.67	0.67	0.67	0.67	0.67	0.67	0.67	0.67
	-5	TC	3.66	3.67	3.67	3.70	3.86	3.92	3.92	3.92	3.96	3.96	3.96	3.96	4.22	4.22	4.22	4.22
		S/T	0.68	0.75	0.82	0.89	0.56	0.63	0.69	0.76	0.50	0.57	0.63	0.70	0.37	0.43	0.49	0.55
		PI	0.67	0.67	0.67	0.67	0.67	0.67	0.67	0.67	0.67	0.67	0.67	0.67	0.67	0.67	0.67	0.67
	0	TC	3.64	3.66	3.66	3.68	3.85	3.91	3.91	3.91	3.95	3.95	3.95	3.95	4.22	4.22	4.22	4.22
		S/T	0.69	0.75	0.82	0.89	0.56	0.63	0.70	0.76	0.50	0.57	0.64	0.71	0.37	0.43	0.49	0.55
		PI	0.67	0.68	0.68	0.67	0.67	0.67	0.67	0.67	0.67	0.67	0.67	0.67	0.68	0.68	0.68	0.68
	5	TC	3.62	3.64	3.64	3.67	3.83	3.89	3.89	3.89	3.94	3.94	3.94	3.94	4.21	4.21	4.21	4.21
		S/T	0.69	0.76	0.83	0.90	0.56	0.63	0.70	0.77	0.50	0.57	0.64	0.71	0.37	0.43	0.49	0.55
		PI	0.68	0.68	0.68	0.68	0.68	0.68	0.68	0.68	0.68	0.68	0.68	0.68	0.68	0.68	0.68	0.68
	10	TC	3.60	3.61	3.61	3.64	3.81	3.87	3.87	3.87	3.92	3.92	3.92	3.92	4.20	4.20	4.20	4.20
		S/T	0.69	0.76	0.83	0.90	0.56	0.63	0.70	0.77	0.50	0.57	0.64	0.71	0.38	0.44	0.50	0.55
		PI	0.69	0.69	0.69	0.69	0.69	0.69	0.69	0.69	0.69	0.69	0.69	0.69	0.69	0.69	0.69	0.69
	15	TC	3.57	3.59	3.59	3.61	3.79	3.85	3.85	3.85	3.90	3.90	3.90	3.90	4.19	4.19	4.19	4.19
		S/T	0.70	0.77	0.84	0.91	0.57	0.64	0.71	0.78	0.51	0.58	0.65	0.72	0.38	0.44	0.50	0.56
		PI	0.71	0.71	0.71	0.71	0.70	0.70	0.70	0.70	0.70	0.70	0.70	0.70	0.70	0.70	0.70	0.70
	20	TC	3.53	3.54	3.54	3.57	3.75	3.75	3.75	3.75	3.86	3.86	3.86	3.86	4.15	4.15	4.15	4.15
		S/T	0.70	0.77	0.84	0.91	0.57	0.64	0.71	0.78	0.51	0.58	0.65	0.72	0.38	0.44	0.50	0.56
		PI	0.73	0.74	0.74	0.73	0.73	0.73	0.73	0.73	0.73	0.73	0.73	0.73	0.73	0.73	0.73	0.73
	25	TC	3.37	3.37	3.37	3.40	3.57	3.57	3.57	3.57	3.69	3.69	3.69	3.69	3.98	3.98	3.98	3.98
		S/T	0.70	0.78	0.86	0.93	0.57	0.65	0.72	0.79	0.51	0.58	0.65	0.72	0.37	0.44	0.50	0.57
		PI	0.80	0.80	0.80	0.80	0.80	0.80	0.80	0.80	0.80	0.80	0.80	0.80	0.80	0.80	0.80	0.80
	30	TC	3.20	3.20	3.20	3.23	3.43	3.43	3.43	3.43	3.52	3.52	3.52	3.52	3.80	3.80	3.80	3.80
		S/T	0.71	0.79	0.87	0.95	0.58	0.65	0.73	0.80	0.51	0.59	0.66	0.74	0.37	0.44	0.51	0.57
		PI	0.88	0.88	0.88	0.88	0.88	0.88	0.88	0.88	0.88	0.88	0.88	0.88	0.89	0.89	0.89	0.89
	35	TC	3.05	3.05	3.08	3.11	3.26	3.26	3.26	3.26	3.34	3.34	3.40	3.34	3.60	3.60	3.60	3.60
		S/T	0.72	0.80	0.89	0.97	0.58	0.66	0.74	0.82	0.51	0.59	0.67	0.75	0.36	0.44	0.51	0.58
		PI	0.96	0.96	0.96	0.96	0.97	0.97	0.97	0.97	0.97	0.97	0.97	0.97	0.97	0.97	0.97	0.97
	40	TC	2.89	2.89	2.92	2.95	3.09	3.09	3.09	3.09	3.18	3.18	3.21	3.18	3.43	3.43	3.43	3.43
		S/T	0.74	0.83	0.92	1.00	0.59	0.67	0.76	0.85	0.52	0.60	0.69	0.77	0.36	0.44	0.52	0.59
		PI	1.07	1.07	1.07	1.07	1.07	1.07	1.07	1.07	1.08	1.08	1.08	1.08	1.08	1.08	1.08	1.08
	46	TC	2.67	2.67	2.70	2.73	2.87	2.87	2.87	2.87	2.96	2.96	2.96	2.96	3.19	3.19	3.19	3.19
		S/T	0.75	0.85	0.94	1.00	0.59	0.68	0.77	0.87	0.52	0.61	0.70	0.79	0.35	0.44	0.52	0.60
		PI	1.19	1.19	1.19	1.19	1.19	1.19	1.19	1.19	1.20	1.20	1.20	1.20	1.21	1.21	1.21	1.21
	50	TC	2.53	2.53	2.55	2.58	2.70	2.70	2.70	2.73	2.79	2.79	2.79	2.79	3.02	3.02	3.02	3.02
		S/T	0.76	0.86	0.96	1.00	0.60	0.70	0.79	0.89	0.52	0.62	0.71	0.81	0.35	0.44	0.52	0.61
		PI	1.29	1.29	1.29	1.29	1.29	1.29	1.29	1.29	1.30	1.30	1.30	1.30	1.31	1.31	1.31	1.31

485	-15	TC	3.78	3.78	3.81	3.84	3.96	3.96	3.96	3.96	4.06	4.06	4.06	4.06	4.31	4.31	4.31	4.31
		S/T	0.70	0.79	0.98	1.00	0.56	0.65	0.73	0.81	0.50	0.58	0.66	0.74	0.35	0.42	0.49	0.57
		PI	0.69	0.69	0.69	0.69	0.69	0.69	0.69	0.69	0.69	0.69	0.69	0.69	0.68	0.68	0.68	0.68
	-10	TC	3.76	3.76	3.79	3.82	3.93	3.93	3.93	3.93	4.04	4.04	4.04	4.04	4.29	4.29	4.29	4.29
		S/T	0.71	0.80	0.99	1.00	0.56	0.65	0.74	0.82	0.50	0.58	0.66	0.75	0.35	0.43	0.49	0.57
		PI	0.68	0.68	0.68	0.68	0.69	0.69	0.69	0.69	0.69	0.69	0.69	0.69	0.68	0.68	0.68	0.68
	-5	TC	3.73	3.73	3.76	3.79	3.92	3.92	3.92	3.92	4.02	4.02	4.02	4.02	4.28	4.28	4.28	4.28
		S/T	0.71	0.80	0.99	1.00	0.57	0.65	0.74	0.82	0.51	0.59	0.66	0.75	0.35	0.43	0.50	0.58
		PI	0.68	0.68	0.68	0.68	0.68	0.68	0.68	0.68	0.69	0.69	0.69	0.69	0.68	0.68	0.68	0.68
	0	TC	3.72	3.72	3.75	3.77	3.91	3.91	3.91	3.91	4.01	4.01	4.01	4.01	4.28	4.28	4.28	4.28
		S/T	0.72	0.80	1.00	1.00	0.57	0.66	0.74	0.82	0.51	0.59	0.67	0.75	0.35	0.43	0.50	0.58
		PI	0.69	0.69	0.69	0.69	0.69	0.69	0.69	0.69	0.69	0.69	0.69	0.69	0.69	0.69	0.69	0.69
	5	TC	3.70	3.70	3.73	3.76	3.89	3.89	3.89	3.89	4.00	4.00	4.00	4.00	4.27	4.27	4.27	4.27
		S/T	0.72	0.81	1.00	1.00	0.57	0.66	0.75	0.83	0.51	0.59	0.67	0.76	0.35	0.43	0.50	0.58
		PI	0.69	0.69	0.69	0.69	0.69	0.69	0.69	0.69	0.70	0.70	0.70	0.70	0.69	0.69	0.69	0.69
	10	TC	3.67	3.67	3.70	3.73	3.87	3.87	3.87	3.87	3.98	3.98	3.98	3.98	4.26	4.26	4.26	4.26
		S/T	0.72	0.81	1.00	1.00	0.57	0.66	0.75	0.83	0.51	0.59	0.67	0.76	0.36	0.44	0.50	0.58
		PI	0.70	0.70	0.70	0.70	0.70	0.70	0.70	0.70	0.71	0.71	0.71	0.71	0.70	0.70	0.70	0.70
	15	TC	3.64	3.64	3.67	3.70	3.85	3.85	3.85	3.85	3.96	3.96	3.96	3.96	4.25	4.25	4.25	4.25
		S/T	0.73	0.82	0.91	0.99	0.58	0.67	0.76	0.84	0.52	0.60	0.68	0.77	0.36	0.44	0.51	0.59
		PI	0.72	0.72	0.72	0.72	0.72	0.72	0.72	0.72	0.72	0.72	0.72	0.72	0.71	0.71	0.71	0.71
	20	TC	3.60	3.60	3.63	3.66	3.81	3.81	3.81	3.81	3.92	3.92	3.92	3.92	4.21	4.21	4.21	4.21
		S/T	0.73	0.82	0.91	0.99	0.58	0.67	0.76	0.84	0.52	0.60	0.68	0.77	0.36	0.44	0.51	0.59
		PI	0.75	0.75	0.75	0.75	0.75	0.75	0.75	0.75	0.75	0.75	0.75	0.75	0.74	0.74	0.74	0.74
	25	TC	3.43	3.43	3.46	3.49	3.63	3.63	3.63	3.63	3.75	3.75	3.75	3.75	4.04	4.04	4.04	4.04
		S/T	0.74	0.83	0.93	1.00	0.59	0.68	0.77	0.86	0.52	0.60	0.69	0.78	0.36	0.44	0.52	0.60
		PI	0.82	0.82	0.82	0.82	0.82	0.82	0.82	0.82	0.82	0.82	0.82	0.82	0.82	0.82	0.82	0.82
	30	TC	3.26	3.26	3.29	3.32	3.49	3.49	3.49	3.49	3.57	3.57	3.57	3.57	3.86	3.86	3.86	3.86
		S/T	0.75	0.85	0.95	1.00	0.59	0.69	0.78	0.87	0.52	0.61	0.70	0.79	0.35	0.44	0.52	0.61
		PI	0.90	0.90	0.90	0.90	0.90	0.90	0.90	0.90	0.90	0.90	0.90	0.90	0.90	0.90	0.90	0.90
	35	TC	3.11	3.11	3.14	3.17	3.32	3.32	3.32	3.34	3.40	3.40	3.46	3.40	3.66	3.66	3.66	3.66
		S/T	0.76	0.87	0.97	1.00	0.60	0.70	0.80	0.89	0.52	0.62	0.71	0.81	0.35	0.44	0.53	0.62
		PI	0.98	0.98	0.98	0.98	0.99	0.99	0.99	0.99	0.99	0.99	0.99	0.99	0.99	0.99	0.99	0.99
	40	TC	2.89	2.91	2.94	2.96	3.08	3.08	3.08	3.11	3.17	3.17	3.20	3.17	3.42	3.42	3.42	3.42
		S/T	0.79	0.90	1.00	1.00	0.61	0.72	0.83	0.93	0.53	0.63	0.74	0.84	0.34	0.44	0.54	0.63
		PI	1.09	1.09	1.09	1.09	1.10	1.10	1.10	1.10	1.10	1.10	1.10	1.10	1.10	1.10	1.10	1.10
	46	TC	2.68	2.71	2.73	2.76	2.85	2.85	2.85	2.88	2.93	2.93	2.93	2.93	3.19	3.19	3.19	3.19
		S/T	0.80	0.92	1.00	1.00	0.62	0.73	0.84	0.95	0.53	0.64	0.75	0.86	0.34	0.44	0.54	0.64
		PI	1.21	1.21	1.21	1.21	1.22	1.22	1.22	1.22	1.22	1.22	1.22	1.22	1.23	1.23	1.23	1.23
	50	TC	2.51	2.53	2.56	2.59	2.68	2.68	2.68	2.71	2.76	2.76	2.76	2.79	3.02	3.02	3.02	3.02
		S/T	0.82	0.95	1.00	1.00	0.63	0.75	0.87	0.98	0.54	0.66	0.77	0.89	0.34	0.44	0.55	0.91
		PI	1.31	1.31	1.31	1.31	1.32	1.32	1.32	1.32	1.32	1.32	1.32	1.32	1.33	1.33	1.33	1.33
569	-15	TC	3.84	3.84	3.87	3.90	4.02	4.02	4.02	4.05	4.12	4.12	4.12	4.12	4.40	4.40	4.40	4.40
		S/T	0.73	0.84	1.00	1.00	0.58	0.68	0.77	0.98	0.50	0.60	0.70	0.78	0.34	0.42	0.51	0.60
		PI	0.70	0.70	0.70	0.70	0.70	0.70	0.70	0.70	0.70	0.70	0.70	0.70	0.70	0.70	0.70	0.70
	-10	TC	3.82	3.82	3.85	3.88	3.99	3.99	3.99	4.02	4.10	4.10	4.10	4.10	4.38	4.38	4.38	4.38
		S/T	0.74	0.84	1.00	1.00	0.58	0.68	0.78	0.98	0.50	0.60	0.70	0.79	0.34	0.43	0.51	0.60
		PI	0.70	0.70	0.70	0.70	0.69	0.69	0.69	0.69	0.70	0.70	0.70	0.70	0.70	0.70	0.70	0.70
	-5	TC	3.79	3.79	3.82	3.85	3.98	3.98	3.98	4.01	4.08	4.08	4.08	4.08	4.37	4.37	4.37	4.37
		S/T	0.74	0.85	1.00	1.00	0.59	0.68	0.78	0.99	0.51	0.60	0.70	0.79	0.34	0.43	0.52	0.60
		PI	0.70	0.70	0.70	0.70	0.69	0.69	0.69	0.69	0.70	0.70	0.70	0.70	0.70	0.70	0.70	0.70
	0	TC	3.77	3.77	3.80	3.83	3.96	3.96	3.96	3.99	4.07	4.07	4.07	4.07	4.37	4.37	4.37	4.37
		S/T	0.74	0.85	1.00	1.00	0.59	0.69	0.78	0.99	0.51	0.61	0.71	0.79	0.34	0.43	0.52	0.61
		PI	0.70	0.70	0.70	0.70	0.70	0.70	0.70	0.70	0.70	0.70	0.70	0.70	0.70	0.70	0.70	0.70
	5	TC	3.76	3.76	3.79	3.82	3.95	3.95	3.95	3.98	4.06	4.06	4.06	4.06	4.36	4.36	4.36	4.36
		S/T	0.75	0.86	1.00	1.00	0.59	0.69	0.79	1.00	0.51	0.61	0.71	0.80	0.34	0.43	0.52	0.61
		PI	0.71	0.71	0.71	0.71	0.70	0.70	0.70	0.70	0.70	0.70	0.70	0.70	0.71	0.71	0.71	0.71
	10	TC	3.73	3.73	3.76	3.79	3.93	3.93	3.93	3.96	4.04	4.04	4.04	4.04	4.35	4.35	4.35	4.35
		S/T	0.75	0.86	1.00	1.00	0.59	0.69	0.79	1.00	0.51	0.61	0.71	0.80	0.35	0.44	0.52	0.61
		PI	0.72	0.72	0.72	0.72	0.71	0.71	0.71	0.71	0.71	0.71	0.71	0.71	0.72	0.72	0.72	0.72
	15	TC	3.70	3.70	3.73	3.76	3.90	3.90	3.90	3.93	4.02	4.02	4.02	4.02	4.33	4.33	4.33	4.33
		S/T	0.76	0.87	0.97	1.00	0.60	0.70	0.80	0.89	0.52	0.62	0.72	0.81	0.35	0.44	0.53	0.62
		PI	0.74	0.74	0.74	0.74	0.73	0.73	0.73	0.73	0.73	0.73	0.73	0.73	0.73	0.73	0.73	0.73
	20	TC	3.66	3.66	3.69	3.72	3.86	3.86	3.86	3.89	3.98	3.98	3.98	3.98	4.30	4.30	4.30	4.30
		S/T	0.76	0.87	0.97	1.00	0.60	0.70	0.80	0.89	0.52	0.62	0.72	0.81	0.35	0.44	0.53	0.62
		PI	0.76	0.76	0.76	0.76	0.76	0.76	0.76	0.76	0.76	0.76	0.76	0.76	0.76	0.76	0.76	0.76
	25	TC	3.49	3.49	3.52	3.55	3.69	3.69	3.69	3.72	3.81	3.81	3.81	3.81	4.09	4.09	4.09	4.09
		S/T	0.77	0.88	0.99	1.00	0.61	0.71	0.81	0.91	0.53	0.63	0.73	0.83	0.35	0.44	0.53	0.63
		PI	0.83	0.83	0.83	0.83	0.83	0.83	0.83	0.83	0.83	0.83	0.83	0.83	0.83	0.83	0.83	0.83
	30	TC	3.32	3.34	3.37	3.40	3.55	3.55	3.55	3.57	3.63	3.63	3.63	3.63	3.92	3.92	3.92	3.92
		S/T	0.79	0.90	1.00	1.00	0.61	0.72	0.83	0.93	0.53	0.64	0.74	0.85	0.34	0.44	0.54	0.64
		PI	0.92	0.92	0.92	0.92	0.92	0.92	0.92	0.92	0.92	0.92	0.92	0.92	0.92	0.92	0.92	0.92
	35	TC	3.14	3.17	3.20	3.23	3.37	3.37	3.37	3.40	3.46	3.46	**3.52**	3.46	3.75	3.75	3.75	3.75
		S/T	0.80	0.92	1.00	1.00	0.62	0.73	0.85	0.96	0.53	0.64	**0.75**	0.87	0.34	0.44	0.54	0.65
		PI	1.00	1.00	1.00	1.00	1.01	1.01	1.01	1.01	1.01	1.01	**1.01**	1.01	1.02	1.02	1.02	1.02
	40	TC	2.92	2.95	2.98	3.01	3.14	3.14	3.15	3.18	3.22	3.22	3.25	3.24	3.50	3.50	3.50	3.50
		S/T	0.83	0.96	1.00	1.00	0.64	0.76	0.88	1.00	0.54	0.66	0.78	0.90	0.33	0.45	0.56	0.90
		PI	1.11	1.11	1.11	1.11	1.12	1.12	1.12	1.12	1.12	1.12	1.12	1.12	1.13	1.13	1.13	1.13
	46	TC	2.71	2.73	2.76	2.79	2.90	2.90	2.93	2.96	2.99	2.99	2.99	3.02	3.25	3.25	3.25	3.25
		S/T	0.85	0.99	1.00	1.00	0.64	0.77	0.90	1.00	0.55	0.67	0.80	0.92	0.33	0.45	0.56	0.92
		PI	1.24	1.24	1.24	1.24	1.24	1.24	1.24	1.24	1.24	1.24	1.24	1.24	1.25	1.25	1.25	1.25
	50	TC	2.56	2.59	2.62	2.65	2.73	2.73	2.76	2.79	2.82	2.82	2.82	2.85	3.05	3.05	3.05	3.05
		S/T	0.87	1.00	1.00	1.00	0.66	0.79	0.93	1.00	0.56	0.69	0.82	0.95	0.33	0.45	0.58	0.97
		PI	1.34	1.34	1.34	1.34	1.35	1.35	1.35	1.35	1.35	1.35	1.35	1.35	1.36	1.36	1.36	1.36

TC:Total Cooling Capacity (kW)

S/T:Sensible Cooling Capacity Ratio

PI:Power Input(kW)

Note: The table shows the case where the operation frequency of a compressor is fixed.

18k																			
INDOOR AIRFLOW (CMH)	OUTDOOR DB(℃)	ID WB (℃)	16.0				18.0				19.0				22.0				
		ID DB (℃)	23.0	25.0	27.0	29.0	23.0	25.0	27.0	29.0	23.0	25.0	27.0	29.0	23.0	25.0	27.0	29.0	
479	-15	TC	5.50	5.50	5.50	5.50	5.78	5.90	5.90	5.90	5.93	5.93	5.93	5.93	6.28	6.28	6.28	6.28	
		S/T	0.66	0.71	0.77	0.83	0.55	0.60	0.66	0.71	0.50	0.55	0.61	0.66	0.39	0.43	0.48	0.53	
		PI	1.09	1.08	1.08	1.09	1.08	1.08	1.08	1.08	1.09	1.09	1.09	1.09	1.08	1.08	1.08	1.08	
	-10	TC	5.46	5.47	5.47	5.47	5.75	5.87	5.87	5.87	5.90	5.90	5.90	5.90	6.25	6.25	6.25	6.25	
		S/T	0.66	0.72	0.78	0.83	0.55	0.61	0.66	0.72	0.50	0.55	0.61	0.66	0.39	0.44	0.49	0.53	
		PI	1.08	1.08	1.08	1.08	1.08	1.08	1.08	1.08	1.08	1.08	1.08	1.08	1.08	1.08	1.08	1.08	
	-5	TC	5.43	5.43	5.43	5.43	5.73	5.85	5.85	5.85	5.88	5.88	5.88	5.88	6.24	6.24	6.24	6.24	
		S/T	0.66	0.72	0.78	0.84	0.56	0.61	0.66	0.72	0.51	0.56	0.61	0.66	0.39	0.44	0.49	0.54	
		PI	1.08	1.08	1.08	1.08	1.08	1.08	1.08	1.08	1.08	1.08	1.08	1.08	1.08	1.08	1.08	1.08	
	0	TC	5.40	5.41	5.41	5.41	5.71	5.83	5.83	5.83	5.87	5.87	5.87	5.87	6.23	6.23	6.23	6.23	
		S/T	0.67	0.73	0.78	0.84	0.56	0.61	0.67	0.73	0.51	0.56	0.62	0.67	0.39	0.44	0.49	0.54	
		PI	1.08	1.08	1.08	1.08	1.08	1.08	1.08	1.08	1.09	1.09	1.09	1.09	1.09	1.09	1.09	1.09	
	5	TC	5.38	5.38	5.38	5.38	5.68	5.80	5.80	5.80	5.85	5.85	5.85	5.85	6.23	6.23	6.23	6.23	
		S/T	0.67	0.73	0.79	0.85	0.56	0.62	0.67	0.73	0.51	0.56	0.62	0.67	0.39	0.44	0.49	0.54	
		PI	1.09	1.09	1.09	1.09	1.09	1.09	1.09	1.09	1.10	1.10	1.10	1.10	1.09	1.09	1.09	1.09	
	10	TC	5.34	5.35	5.35	5.35	5.66	5.78	5.78	5.78	5.82	5.82	5.82	5.82	6.21	6.21	6.21	6.21	
		S/T	0.67	0.73	0.79	0.85	0.56	0.62	0.67	0.73	0.51	0.56	0.62	0.67	0.40	0.45	0.50	0.54	
		PI	1.11	1.11	1.11	1.11	1.11	1.11	1.11	1.11	1.11	1.11	1.11	1.11	1.11	1.11	1.11	1.11	
	15	TC	5.30	5.30	5.30	5.30	5.62	5.74	5.74	5.74	5.79	5.79	5.79	5.79	6.19	6.19	6.19	6.19	
		S/T	0.68	0.74	0.80	0.86	0.57	0.62	0.68	0.74	0.52	0.57	0.63	0.68	0.40	0.45	0.50	0.55	
		PI	1.14	1.14	1.14	1.14	1.14	1.14	1.14	1.14	1.14	1.14	1.14	1.14	1.13	1.13	1.13	1.13	
	20	TC	5.24	5.24	5.24	5.24	5.56	5.56	5.56	5.56	5.73	5.73	5.73	5.73	6.13	6.13	6.13	6.13	
		S/T	0.68	0.74	0.80	0.86	0.57	0.63	0.68	0.74	0.52	0.57	0.63	0.68	0.40	0.45	0.50	0.55	
		PI	1.18	1.18	1.18	1.18	1.18	1.18	1.18	1.18	1.18	1.18	1.18	1.18	1.17	1.17	1.17	1.17	
	25	TC	4.99	4.99	4.99	4.99	5.30	5.30	5.30	5.30	5.47	5.47	5.47	5.47	5.87	5.87	5.87	5.87	
		S/T	0.68	0.75	0.81	0.87	0.57	0.63	0.69	0.75	0.51	0.57	0.63	0.69	0.39	0.44	0.50	0.55	
		PI	1.30	1.30	1.30	1.30	1.30	1.30	1.30	1.30	1.30	1.30	1.30	1.30	1.30	1.30	1.30	1.30	
	30	TC	4.76	4.76	4.76	4.81	5.07	5.07	5.07	5.07	5.22	5.22	5.22	5.22	5.62	5.62	5.62	5.62	
		S/T	0.69	0.75	0.82	0.88	0.57	0.63	0.69	0.76	0.51	0.57	0.64	0.70	0.39	0.44	0.50	0.56	
		PI	1.42	1.42	1.42	1.42	1.43	1.43	1.43	1.43	1.43	1.43	1.43	1.43	1.43	1.43	1.43	1.43	
	35	TC	4.53	4.53	4.53	4.59	4.81	4.81	4.81	4.81	4.96	4.96	5.04	4.96	5.36	5.36	5.36	5.36	
		S/T	0.69	0.76	0.83	0.90	0.57	0.64	0.70	0.77	0.51	0.58	0.64	0.71	0.38	0.44	0.50	0.56	
		PI	1.56	1.56	1.56	1.56	1.56	1.56	1.56	1.56	1.57	1.57	1.57	1.57	1.58	1.58	1.58	1.58	
	40	TC	4.28	4.28	4.28	4.32	4.55	4.55	4.55	4.55	4.70	4.70	4.74	4.70	5.07	5.07	5.07	5.07	
		S/T	0.70	0.78	0.86	0.93	0.57	0.65	0.72	0.79	0.51	0.58	0.65	0.72	0.37	0.44	0.50	0.57	
		PI	1.72	1.72	1.72	1.72	1.72	1.72	1.72	1.72	1.73	1.73	1.73	1.73	1.74	1.74	1.74	1.74	
	46	TC	3.97	3.97	3.97	4.00	4.22	4.22	4.22	4.22	4.37	4.37	4.37	4.37	4.71	4.71	4.71	4.71	
		S/T	0.71	0.79	0.87	0.95	0.58	0.65	0.73	0.80	0.51	0.59	0.66	0.73	0.37	0.44	0.51	0.57	
		PI	1.91	1.91	1.91	1.91	1.92	1.92	1.92	1.92	1.92	1.92	1.92	1.92	1.94	1.94	1.94	1.94	
	50	TC	3.71	3.71	3.74	3.77	3.97	3.97	3.97	3.97	4.11	4.11	4.11	4.11	4.45	4.45	4.45	4.45	
		S/T	0.72	0.81	0.89	0.97	0.58	0.66	0.74	0.82	0.51	0.59	0.67	0.75	0.36	0.44	0.51	0.58	
		PI	2.07	2.07	2.07	2.07	2.08	2.08	2.08	2.08	2.09	2.09	2.09	2.09	2.10	2.10	2.10	2.10	
584	-15	TC	5.62	5.62	5.62	5.68	5.90	5.90	5.90	5.90	6.06	6.06	6.06	6.06	6.43	6.43	6.43	6.43	
		S/T	0.67	0.74	0.98	1.00	0.55	0.62	0.69	0.75	0.49	0.56	0.63	0.69	0.37	0.42	0.48	0.54	
		PI	1.11	1.11	1.11	1.11	1.10	1.10	1.10	1.10	1.10	1.10	1.10	1.10	1.10	1.10	1.10	1.10	
	-10	TC	5.59	5.59	5.59	5.65	5.87	5.87	5.87	5.87	6.03	6.03	6.03	6.03	6.40	6.40	6.40	6.40	
		S/T	0.67	0.75	0.99	1.00	0.55	0.62	0.69	0.76	0.49	0.56	0.63	0.69	0.37	0.43	0.49	0.54	
		PI	1.10	1.10	1.10	1.10	1.10	1.10	1.10	1.10	1.10	1.10	1.10	1.10	1.11	1.11	1.11	1.11	
	-5	TC	5.56	5.56	5.56	5.62	5.85	5.85	5.85	5.85	6.00	6.00	6.00	6.00	6.39	6.39	6.39	6.39	
		S/T	0.67	0.75	0.99	1.00	0.56	0.62	0.69	0.76	0.50	0.57	0.63	0.69	0.37	0.43	0.49	0.55	
		PI	1.10	1.10	1.10	1.10	1.10	1.10	1.10	1.10	1.10	1.10	1.10	1.10	1.11	1.11	1.11	1.11	
	0	TC	5.53	5.53	5.53	5.59	5.83	5.83	5.83	5.83	5.99	5.99	5.99	5.99	6.38	6.38	6.38	6.38	
		S/T	0.68	0.75	1.00	1.00	0.56	0.63	0.70	0.76	0.50	0.57	0.64	0.70	0.37	0.43	0.49	0.55	
		PI	1.11	1.11	1.11	1.11	1.10	1.10	1.10	1.10	1.10	1.10	1.10	1.10	1.11	1.11	1.11	1.11	
	5	TC	5.50	5.50	5.50	5.56	5.80	5.80	5.80	5.80	5.97	5.97	5.97	5.97	6.38	6.38	6.38	6.38	
		S/T	0.68	0.76	1.00	1.00	0.56	0.63	0.70	0.77	0.50	0.57	0.64	0.70	0.37	0.43	0.49	0.55	
		PI	1.12	1.12	1.12	1.12	1.11	1.11	1.11	1.11	1.11	1.11	1.11	1.11	1.12	1.12	1.12	1.12	
	10	TC	5.47	5.47	5.47	5.53	5.78	5.78	5.78	5.78	5.94	5.94	5.94	5.94	6.36	6.36	6.36	6.36	
		S/T	0.68	0.76	1.00	1.00	0.56	0.63	0.70	0.77	0.50	0.57	0.64	0.70	0.38	0.44	0.50	0.55	
		PI	1.13	1.13	1.13	1.13	1.13	1.13	1.13	1.13	1.13	1.13	1.13	1.13	1.13	1.13	1.13	1.13	
	15	TC	5.42	5.42	5.42	5.48	5.74	5.74	5.74	5.74	5.91	5.91	5.91	5.91	6.33	6.33	6.33	6.33	
		S/T	0.69	0.77	0.84	0.91	0.57	0.64	0.71	0.78	0.51	0.58	0.65	0.71	0.38	0.44	0.50	0.56	
		PI	1.16	1.16	1.16	1.16	1.15	1.15	1.15	1.15	1.15	1.15	1.15	1.15	1.16	1.16	1.16	1.16	
	20	TC	5.36	5.36	5.36	5.42	5.68	5.68	5.68	5.68	5.85	5.85	5.85	5.85	6.28	6.28	6.28	6.28	
		S/T	0.69	0.77	0.84	0.91	0.57	0.64	0.71	0.78	0.51	0.58	0.65	0.71	0.38	0.44	0.50	0.56	
		PI	1.20	1.20	1.20	1.20	1.19	1.19	1.19	1.19	1.19	1.19	1.19	1.19	1.19	1.19	1.19	1.19	
	25	TC	5.10	5.10	5.10	5.16	5.42	5.42	5.42	5.42	5.59	5.59	5.59	5.59	6.02	6.02	6.02	6.02	
		S/T	0.70	0.78	0.85	0.93	0.57	0.64	0.72	0.79	0.51	0.58	0.65	0.72	0.37	0.44	0.50	0.57	
		PI	1.32	1.32	1.32	1.32	1.32	1.32	1.32	1.32	1.32	1.32	1.32	1.32	1.32	1.32	1.32	1.32	
	30	TC	4.87	4.87	4.87	4.93	5.19	5.19	5.19	5.19	5.33	5.33	5.33	5.33	5.76	5.76	5.76	5.76	
		S/T	0.71	0.79	0.87	0.94	0.57	0.65	0.72	0.80	0.51	0.59	0.66	0.73	0.37	0.44	0.50	0.57	
		PI	1.45	1.45	1.45	1.45	1.46	1.46	1.46	1.46	1.46	1.46	1.46	1.46	1.46	1.46	1.46	1.46	
	35	TC	4.62	4.62	4.67	4.73	4.93	4.93	4.93	4.93	5.07	5.07	5.16	5.07	5.48	5.48	5.48	5.48	
		S/T	0.72	0.80	0.88	0.96	0.58	0.66	0.74	0.82	0.51	0.59	0.66	0.74	0.37	0.44	0.51	0.58	
		PI	1.58	1.58	1.58	1.58	1.59	1.59	1.59	1.59	1.59	1.59	1.60	1.59	1.59	1.59	1.59	1.59	
	40	TC	4.34	4.34	4.38	4.43	4.63	4.63	4.63	4.63	4.77	4.77	4.82	4.77	5.16	5.16	5.16	5.16	
		S/T	0.73	0.83	0.92	1.00	0.59	0.67	0.76	0.85	0.52	0.60	0.68	0.77	0.36	0.44	0.51	0.59	
		PI	1.74	1.74	1.74	1.74	1.75	1.75	1.75	1.75	1.75	1.75	1.76	1.75	1.76	1.76	1.76	1.76	
	46	TC	4.03	4.03	4.06	4.09	4.29	4.29	4.29	4.29	4.43	4.43	4.43	4.43	4.80	4.80	4.80	4.80	
		S/T	0.74	0.84	0.93	1.00	0.59	0.68	0.77	0.86	0.52	0.61	0.69	0.78	0.36	0.44	0.52	0.60	
		PI	1.94	1.94	1.94	1.94	1.95	1.95	1.95	1.95	1.95	1.95	1.95	1.95	1.97	1.97	1.97	1.97	
	50	TC	3.77	3.77	3.80	3.83	4.03	4.03	4.03	4.06	4.17	4.17	4.17	4.17	4.51	4.51	4.51	4.51	
		S/T	0.76	0.86	0.96	1.00	0.60	0.69	0.79	0.88	0.52	0.61	0.71	0.80	0.35	0.44	0.52	0.91	
		PI	2.11	2.11	2.11	2.11	2.11	2.11	2.11	2.11	2.12	2.12	2.12	2.12	2.14	2.14	2.14	2.14	

680	-15	TC	5.74	5.74	5.74	5.80	6.05	6.05	6.05	6.05	6.20	6.20	6.20	6.20	6.57	6.57	6.57	6.57
		S/T	0.69	0.77	1.00	1.00	0.56	0.63	0.70	0.98	0.49	0.57	0.64	0.71	0.36	0.42	0.49	0.56
		PI	1.14	1.14	1.14	1.14	1.13	1.13	1.13	1.13	1.13	1.13	1.13	1.13	1.12	1.12	1.12	1.12
	-10	TC	5.71	5.71	5.71	5.77	6.02	6.02	6.02	6.02	6.17	6.17	6.17	6.17	6.55	6.55	6.55	6.55
		S/T	0.69	0.78	1.00	1.00	0.56	0.63	0.71	0.98	0.49	0.57	0.64	0.72	0.36	0.43	0.49	0.56
		PI	1.13	1.13	1.13	1.13	1.12	1.12	1.12	1.12	1.13	1.13	1.13	1.13	1.12	1.12	1.12	1.12
	-5	TC	5.67	5.67	5.67	5.73	6.00	6.00	6.00	6.00	6.15	6.15	6.15	6.15	6.53	6.53	6.53	6.53
		S/T	0.69	0.78	1.00	1.00	0.57	0.63	0.71	0.99	0.50	0.58	0.64	0.72	0.36	0.43	0.50	0.57
		PI	1.13	1.13	1.13	1.13	1.12	1.12	1.12	1.12	1.13	1.13	1.13	1.13	1.13	1.13	1.13	1.13
	0	TC	5.65	5.65	5.65	5.71	5.97	5.97	5.97	5.97	6.13	6.13	6.13	6.13	6.53	6.53	6.53	6.53
		S/T	0.70	0.78	1.00	1.00	0.57	0.64	0.72	0.99	0.50	0.58	0.65	0.73	0.36	0.43	0.50	0.57
		PI	1.13	1.13	1.13	1.13	1.13	1.13	1.13	1.13	1.13	1.13	1.13	1.13	1.13	1.13	1.13	1.13
	5	TC	5.62	5.62	5.62	5.68	5.95	5.95	5.95	5.95	6.11	6.11	6.11	6.11	6.52	6.52	6.52	6.52
		S/T	0.70	0.79	1.00	1.00	0.57	0.64	0.72	1.00	0.50	0.58	0.65	0.73	0.36	0.43	0.50	0.57
		PI	1.14	1.14	1.14	1.14	1.14	1.14	1.14	1.14	1.14	1.14	1.14	1.14	1.14	1.14	1.14	1.14
	10	TC	5.58	5.58	5.58	5.64	5.92	5.92	5.92	5.92	6.09	6.09	6.09	6.09	6.51	6.51	6.51	6.51
		S/T	0.70	0.79	1.00	1.00	0.57	0.64	0.72	1.00	0.50	0.58	0.65	0.73	0.37	0.44	0.50	0.57
		PI	1.16	1.16	1.16	1.16	1.15	1.15	1.15	1.15	1.16	1.16	1.16	1.16	1.15	1.15	1.15	1.15
	15	TC	5.54	5.54	5.54	5.60	5.88	5.88	5.88	5.88	6.05	6.05	6.05	6.05	6.48	6.48	6.48	6.48
		S/T	0.71	0.80	0.88	0.96	0.58	0.65	0.73	0.81	0.51	0.59	0.66	0.74	0.37	0.44	0.51	0.58
		PI	1.19	1.19	1.19	1.19	1.18	1.18	1.18	1.18	1.18	1.18	1.18	1.18	1.18	1.18	1.18	1.18
	20	TC	5.48	5.48	5.48	5.53	5.82	5.82	5.82	5.82	5.99	5.99	5.99	5.99	6.42	6.42	6.42	6.42
		S/T	0.71	0.80	0.88	0.96	0.58	0.65	0.73	0.81	0.51	0.59	0.66	0.74	0.37	0.44	0.51	0.58
		PI	1.23	1.23	1.23	1.23	1.22	1.22	1.22	1.22	1.22	1.22	1.22	1.22	1.21	1.21	1.21	1.21
	25	TC	5.22	5.22	5.28	5.33	5.56	5.56	5.56	5.56	5.73	5.73	5.73	5.73	6.16	6.16	6.16	6.16
		S/T	0.72	0.81	0.89	0.97	0.58	0.66	0.74	0.83	0.51	0.59	0.67	0.75	0.36	0.44	0.51	0.58
		PI	1.35	1.35	1.35	1.35	1.35	1.35	1.35	1.35	1.35	1.35	1.35	1.35	1.35	1.35	1.35	1.35
	30	TC	4.99	4.99	5.05	5.10	5.30	5.30	5.30	5.30	5.45	5.45	5.45	5.45	5.88	5.88	5.88	5.88
		S/T	0.73	0.82	0.91	0.99	0.58	0.67	0.76	0.84	0.52	0.60	0.68	0.77	0.36	0.44	0.51	0.59
		PI	1.49	1.49	1.49	1.49	1.49	1.49	1.49	1.49	1.49	1.49	1.49	1.49	1.50	1.50	1.50	1.50
	35	TC	4.73	4.73	4.79	4.85	5.05	5.05	5.05	5.05	5.19	5.19	**5.28**	5.19	5.59	5.59	5.59	5.59
		S/T	0.74	0.84	0.93	1.00	0.59	0.68	0.77	0.86	0.52	0.61	**0.69**	0.78	0.36	0.44	0.52	0.60
		PI	1.62	1.62	1.62	1.62	1.62	1.62	1.62	1.62	1.63	1.63	**1.63**	1.63	1.64	1.64	1.64	1.64
	40	TC	4.44	4.45	4.50	4.54	4.74	4.74	4.74	4.77	4.89	4.89	4.93	4.89	5.27	5.27	5.27	5.27
		S/T	0.76	0.87	0.97	1.00	0.60	0.70	0.80	0.89	0.52	0.62	0.72	0.81	0.35	0.44	0.53	0.90
		PI	1.79	1.79	1.79	1.79	1.79	1.79	1.79	1.79	1.80	1.80	1.80	1.80	1.81	1.81	1.81	1.81
	46	TC	4.11	4.14	4.17	4.20	4.40	4.40	4.40	4.46	4.54	4.54	4.54	4.54	4.91	4.91	4.91	4.91
		S/T	0.77	0.88	0.99	1.00	0.60	0.71	0.81	0.91	0.53	0.63	0.73	0.83	0.35	0.44	0.53	0.92
		PI	1.99	1.99	1.99	1.99	1.99	1.99	1.99	1.99	2.00	2.00	2.00	2.00	2.02	2.02	2.02	2.02
	50	TC	3.86	3.89	3.91	3.94	4.11	4.11	4.11	4.14	4.26	4.26	4.26	4.26	4.63	4.63	4.63	4.63
		S/T	0.79	0.91	1.00	1.00	0.61	0.72	0.83	0.94	0.53	0.64	0.74	0.85	0.34	0.44	0.54	0.97
		PI	2.15	2.15	2.15	2.15	2.16	2.16	2.16	2.16	2.17	2.17	2.17	2.17	2.19	2.19	2.19	2.19

TC:Total Cooling Capacity (kW)

S/T:Sensible Cooling Capacity Ratio

PI:Power Input(kW)

Note: The table shows the case where the operation frequency of a compressor is fixed.

8.2 Heating

12k									[SI_Unit]
INDOOR AIRFLOW (CMH)	HEATING PERFORMANCE AT INDOOR DRY BULB TEMPERATURE								
	OUTDOOR DB(°C)	TC:TOTAL CAPACITY IN KILOWATTS (KW)				PI:TOTAL POWER IN KILOWATTS (KW)			
		Indoor Conditions (DB °C)				Indoor Conditions (DB °C)			
		16.0	20.0	22.0	24.0	16.0	20.0	22.0	24.0
389	-15.0	2.61	2.56	2.56	2.53	1.16	1.20	1.18	1.19
	-10.0	2.79	2.73	2.73	2.71	1.24	1.28	1.26	1.27
	-7.0	2.92	2.86	2.86	2.83	1.31	1.36	1.33	1.34
	-5.6	2.98	2.92	2.92	2.89	1.29	1.30	1.31	1.31
	-2.8	3.04	3.01	2.98	2.95	1.22	1.23	1.24	1.24
	0.0	3.07	3.01	3.01	2.98	1.16	1.17	1.17	1.17
	2.8	3.21	3.15	3.12	3.12	1.11	1.11	1.11	1.12
	5.6	3.44	3.41	3.38	3.35	1.06	1.06	1.06	1.06
	7.0	3.73	3.69	3.61	3.61	1.03	1.00	1.03	1.03
	11.1	3.90	3.84	3.81	3.78	0.94	0.94	0.94	0.94
	13.9	4.04	3.98	3.96	3.93	0.89	0.88	0.88	0.87
	16.7	4.19	4.13	4.10	4.07	0.83	0.82	0.81	0.81
	18.0	4.25	4.19	4.16	4.13	0.80	0.79	0.78	0.78
485	-15.0	2.63	2.60	2.60	2.58	1.18	1.22	1.20	1.20
	-10.0	2.81	2.78	2.78	2.75	1.26	1.30	1.27	1.27
	-7.0	2.94	2.91	2.91	2.88	1.33	1.38	1.35	1.35
	-5.6	3.01	2.98	2.98	2.95	1.30	1.31	1.31	1.32
	-2.8	3.09	3.07	3.04	3.01	1.24	1.25	1.25	1.26
	0.0	3.12	3.09	3.07	3.04	1.17	1.18	1.18	1.19
	2.8	3.27	3.24	3.21	3.18	1.12	1.12	1.12	1.13
	5.6	3.53	3.47	3.47	3.44	1.06	1.07	1.07	1.07
	7.0	3.84	3.78	3.69	3.66	1.04	1.01	1.04	1.04
	11.1	3.98	3.93	3.90	3.90	0.95	0.95	0.95	0.94
	13.9	4.13	4.07	4.04	4.01	0.89	0.89	0.88	0.88
	16.7	4.28	4.22	4.19	4.16	0.83	0.82	0.82	0.81
	18.0	4.36	4.30	4.28	4.22	0.81	0.79	0.79	0.78
569	-15.0	2.66	2.64	2.61	2.59	1.19	1.23	1.20	1.21
	-10.0	2.84	2.82	2.79	2.76	1.27	1.31	1.28	1.29
	-7.0	2.98	2.95	2.92	2.89	1.34	1.39	1.36	1.37
	-5.6	3.07	3.04	3.01	2.98	1.31	1.32	1.32	1.33
	-2.8	3.12	3.09	3.07	3.07	1.25	1.26	1.27	1.27
	0.0	3.15	3.12	3.09	3.07	1.19	1.19	1.20	1.20
	2.8	3.30	3.27	3.24	3.21	1.13	1.14	1.14	1.14
	5.6	3.56	3.50	3.50	3.47	1.08	1.08	1.08	1.08
	7.0	3.87	3.81	3.72	3.69	1.05	1.02	1.05	1.05
	11.1	4.01	3.96	3.93	3.90	0.96	0.96	0.96	0.95
	13.9	4.16	4.10	4.07	4.04	0.90	0.90	0.89	0.89
	16.7	4.30	4.25	4.22	4.19	0.84	0.83	0.83	0.82
	18.0	4.39	4.30	4.28	4.25	0.81	0.80	0.80	0.79

Note: The table shows the case where the operation frequency of a compressor is fixed.

18k									[SI_Unit]
INDOOR AIRFLOW (CMH)	HEATING PERFORMANCE AT INDOOR DRY BULB TEMPERATURE								
	OUTDOOR DB(°C)	TC:TOTAL CAPACITY IN KILOWATTS (KW)				PI:TOTAL POWER IN KILOWATTS (KW)			
		Indoor Conditions (DB °C)				Indoor Conditions (DB °C)			
		16.0	20.0	22.0	24.0	16.0	20.0	22.0	24.0
479	-15.0	3.61	3.56	3.54	3.51	1.54	1.59	1.58	1.59
	-10.0	3.86	3.80	3.78	3.75	1.64	1.70	1.68	1.70
	-7.0	4.04	3.98	3.96	3.93	1.75	1.81	1.79	1.81
	-5.6	4.19	4.13	4.10	4.07	1.72	1.75	1.76	1.77
	-2.8	4.30	4.25	4.22	4.22	1.66	1.69	1.70	1.71
	0.0	4.39	4.33	4.30	4.27	1.61	1.63	1.64	1.65
	2.8	4.62	4.57	4.54	4.51	1.57	1.59	1.60	1.61
	5.6	5.03	4.97	4.94	4.91	1.53	1.55	1.56	1.57
	7.0	5.46	5.39	5.28	5.22	1.50	1.50	1.53	1.54
	11.1	5.74	5.66	5.63	5.57	1.43	1.45	1.45	1.46
	13.9	5.97	5.89	5.86	5.80	1.39	1.40	1.40	1.41
	16.7	6.21	6.12	6.09	6.03	1.34	1.35	1.35	1.36
	18.0	6.32	6.24	6.21	6.15	1.32	1.32	1.33	1.33
584	-15.0	3.69	3.64	3.61	3.59	1.56	1.61	1.59	1.60
	-10.0	3.94	3.88	3.86	3.83	1.66	1.71	1.70	1.71
	-7.0	4.12	4.07	4.04	4.01	1.77	1.82	1.81	1.82
	-5.6	4.27	4.22	4.19	4.16	1.73	1.76	1.77	1.79
	-2.8	4.39	4.33	4.33	4.30	1.68	1.70	1.72	1.73
	0.0	4.48	4.42	4.39	4.36	1.63	1.65	1.66	1.67
	2.8	4.74	4.68	4.65	4.59	1.59	1.61	1.62	1.63
	5.6	5.15	5.09	5.06	5.00	1.55	1.57	1.58	1.58
	7.0	5.57	5.51	5.37	5.34	1.52	1.52	1.55	1.56
	11.1	5.86	5.77	5.74	5.68	1.45	1.47	1.47	1.48
	13.9	6.09	6.00	5.97	5.95	1.41	1.42	1.42	1.43
	16.7	6.35	6.26	6.21	6.18	1.36	1.37	1.37	1.38
	18.0	6.47	6.38	6.32	6.29	1.34	1.35	1.35	1.36
680	-15.0	3.72	3.67	3.64	3.61	1.57	1.62	1.60	1.62
	-10.0	3.97	3.91	3.89	3.86	1.67	1.73	1.71	1.73
	-7.0	4.16	4.10	4.07	4.04	1.78	1.84	1.82	1.84
	-5.6	4.30	4.25	4.22	4.19	1.75	1.78	1.79	1.80
	-2.8	4.45	4.39	4.36	4.33	1.70	1.72	1.73	1.75
	0.0	4.54	4.48	4.45	4.42	1.64	1.67	1.68	1.69
	2.8	4.77	4.71	4.68	4.65	1.60	1.63	1.64	1.65
	5.6	5.20	5.12	5.09	5.06	1.57	1.59	1.59	1.60
	7.0	5.66	5.57	5.42	5.39	1.54	1.54	1.57	1.58
	11.1	5.92	5.83	5.80	5.77	1.47	1.49	1.49	1.50
	13.9	6.18	6.09	6.03	6.00	1.43	1.44	1.45	1.45
	16.7	6.41	6.32	6.29	6.24	1.38	1.39	1.40	1.40
	18.0	6.55	6.44	6.41	6.35	1.36	1.37	1.37	1.38

Note: The table shows the case where the operation frequency of a compressor is fixed.

9. Noise Criterion Curves

9.1 Indoor Unit

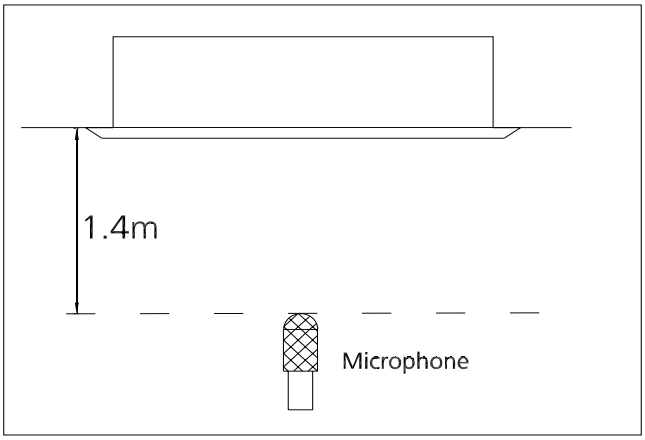

Notes:

-Sound measured at 1.4m away from the noisiest location of the unit.

-Data is valid at free field condition

-Data is valid at nominal operation condition

-Reference acoustic pressure OdB = 20μPa

-Sound level will vary depending on a range of factors such as the construction -(acoustic absorption coefficient) of particular room in which the equipment is installed.

-The operating conditions are assumed to be standard.

CDMX-035N-09M25

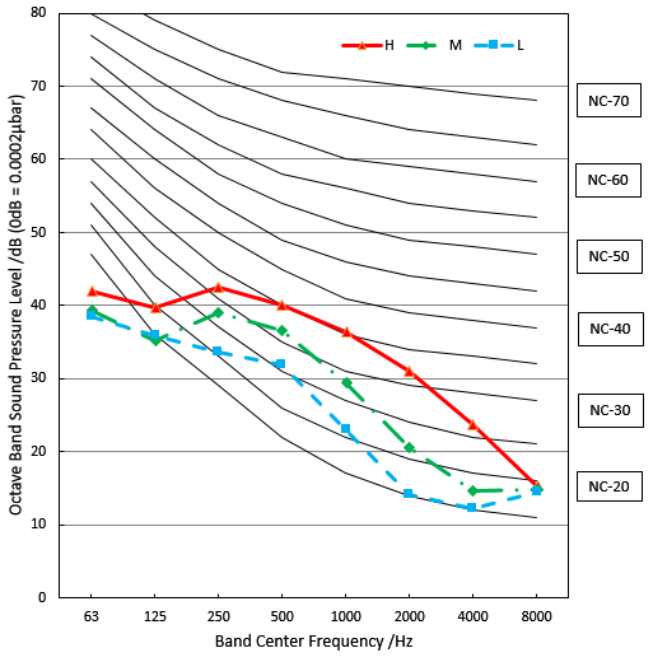

CDMX-050N-09M25

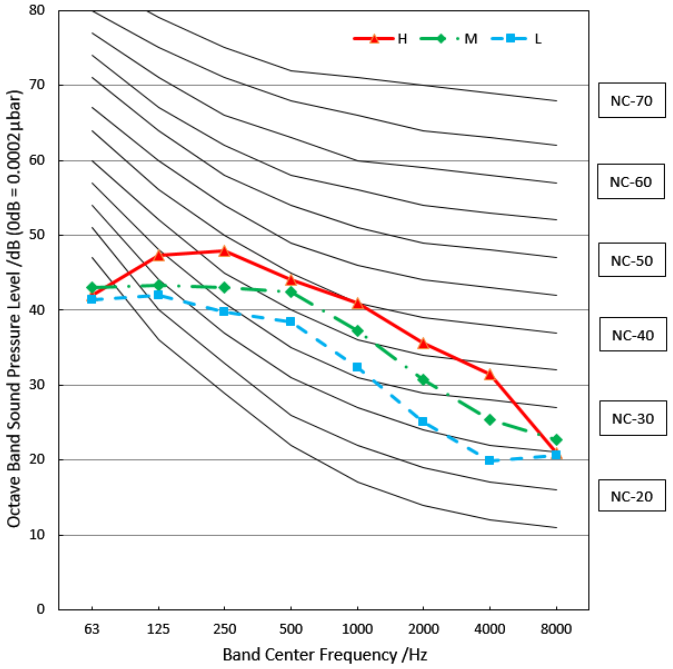

10. Electrical Characteristics

Capacity (Btu/h)		12k~18k
OUDOOR UNIT POWER	Phase	1-phase
	Frequency and Voltage	220-240V, 50Hz
	Power Wiring (mm^2)	3×1.5
	Circuit Breaker/ Fuse (A)	25/20
Indoor/Outdoor Connecting Wiring	Weak Electric Signal)(mm^2)	
	Strong Electric Signal(mm^2)	4×1.0

11. Electrical Wiring Diagrams

IDU Model	IDU Wiring Diagram
CDMX-035N-09M25	16022500004023
CDMX-050N-09M25	

Abbreviation	Paraphrase
Y/G	Yellow-Green Conductor
CAP1	Indoor Fan Capacitor
FAN1	Indoor Fan
PUMP	PUMP
L	LIVE
N	NEUTRAL
TO CCM Comm.Bus	Central Controller
T1	Indoor Room Temperature
T2	Coil Temperature of Indoor Heat Exchanger
P1	Super High Speed
P2	High Speed

Indoor unit wiring diagram: 16022500004023

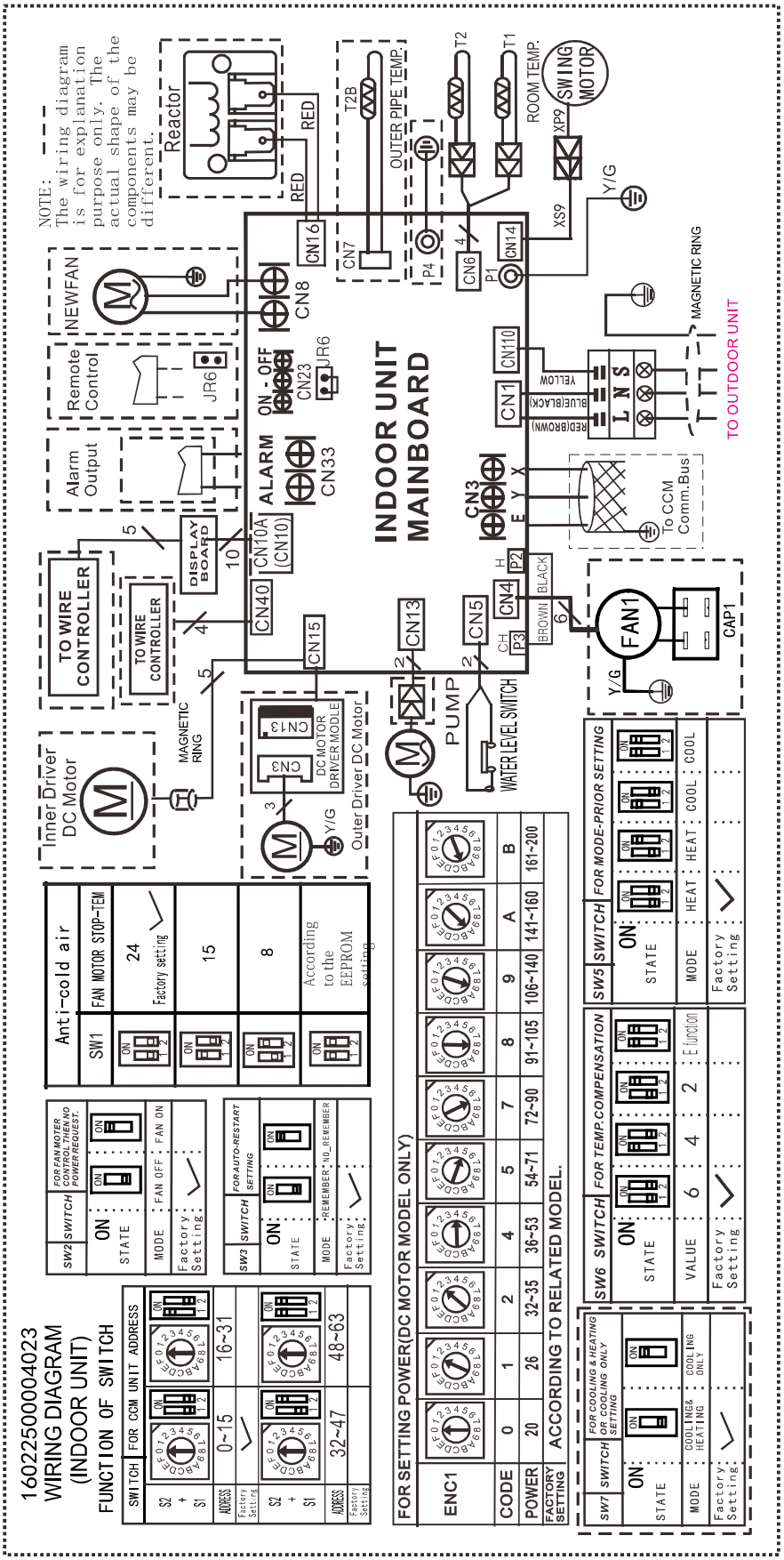

10.1 Some connectors introduce:

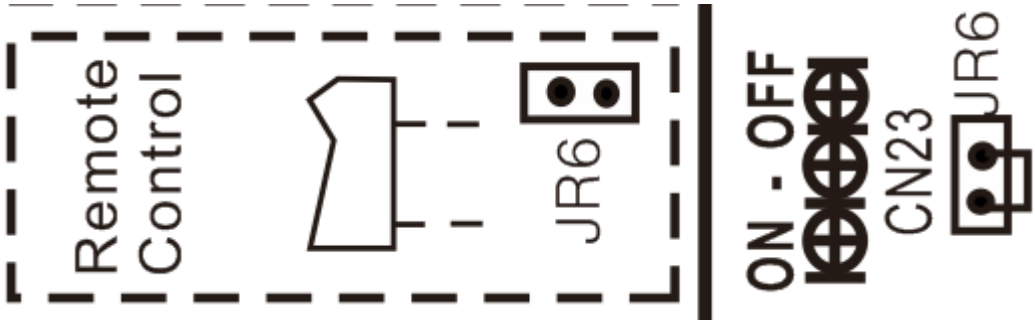

A For remote control (ON-OFF) terminal port CN23 and short connector of JR6

1. Remove the short connector of JR6 when you use ON-OFF function;
2. When remote switch off (OPEN) ;the unit would be off;
3. When remote switch on (CLOSE) ;the unit would be on;
4. When close/open the remote switch, the unit would be responded the demand within 2 seconds;
5. When the remote switch on. you can use remote controller/ wire controller to select the mode what you want ;when the remote switch off , the unit would not respond the demand from remote controller/wire controller.

when the remote switch off , but the remote controller / wire controller are on, CP code would be shown on the display board.

6.The voltage of the port is 12V DC , design Max.current is 5mA.

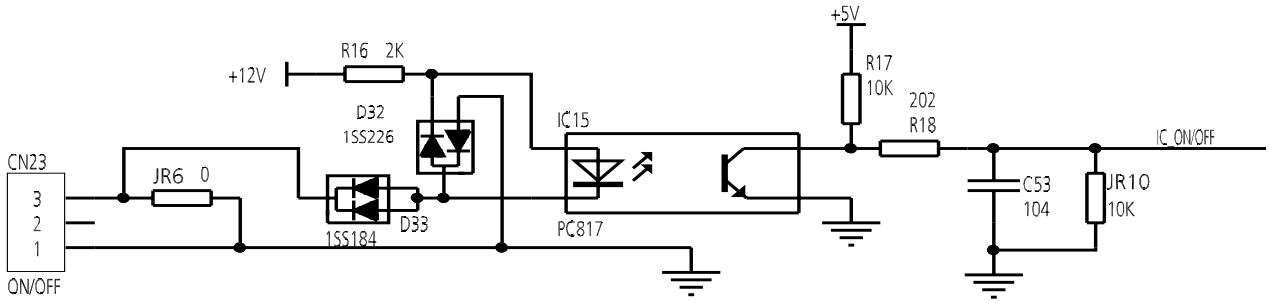

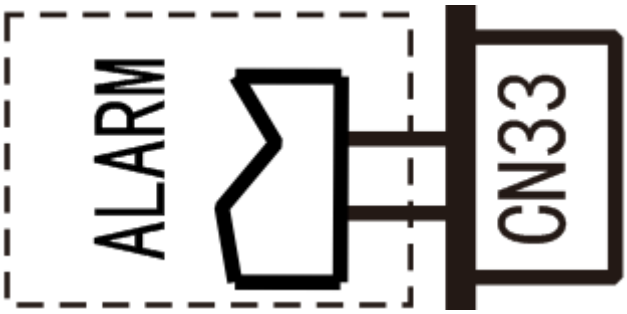

B For ALARM terminal port CN33

1. Provide the terminal port to connect ALARM ,but no voltage of the terminal port , the power from the ALARM system (not from the unit)
2. Although design voltage can support higher voltage ,but we strongly ask you connect the power less than 24V, current less than 0.5A
3. When the unit occurs the problem , the relay would be closed , then ALARM works

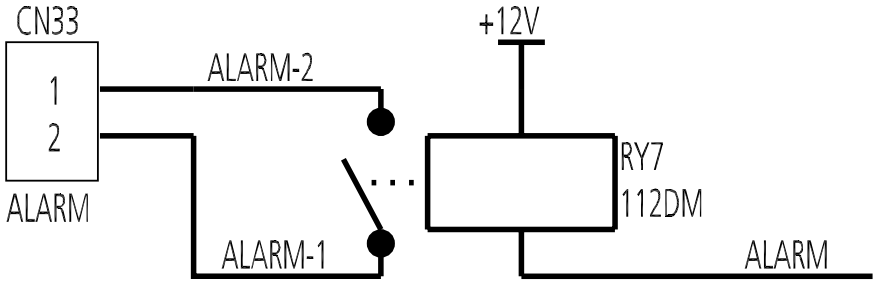

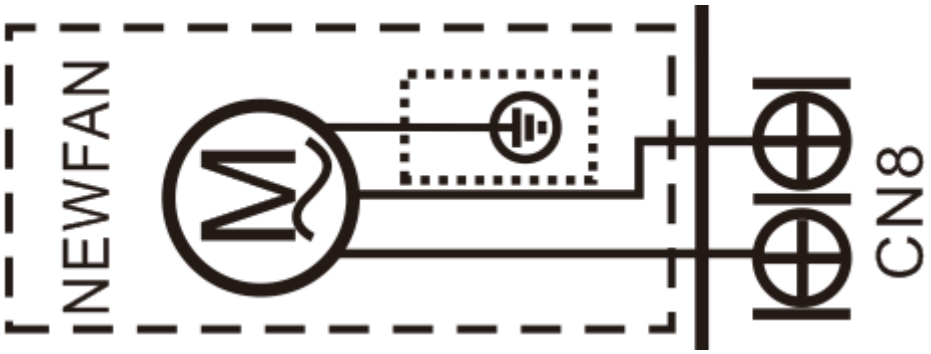

C. For new fresh motor terminal port CN8
1. Connect the fan motor to the port , no need care L/N of the motor ;
2. The output voltage is the power supply;
3. The fresh motor can not excess 200W or 1A , follow the smaller one ;
4. The new fresh motor will be worked when the indoor fan motor work ;when the indoor fan mo tor stops , the new fresh motor would be stopped ;
5. When the unit enter force cooling mode or capacity testing mode , the fresh motor isn't work .

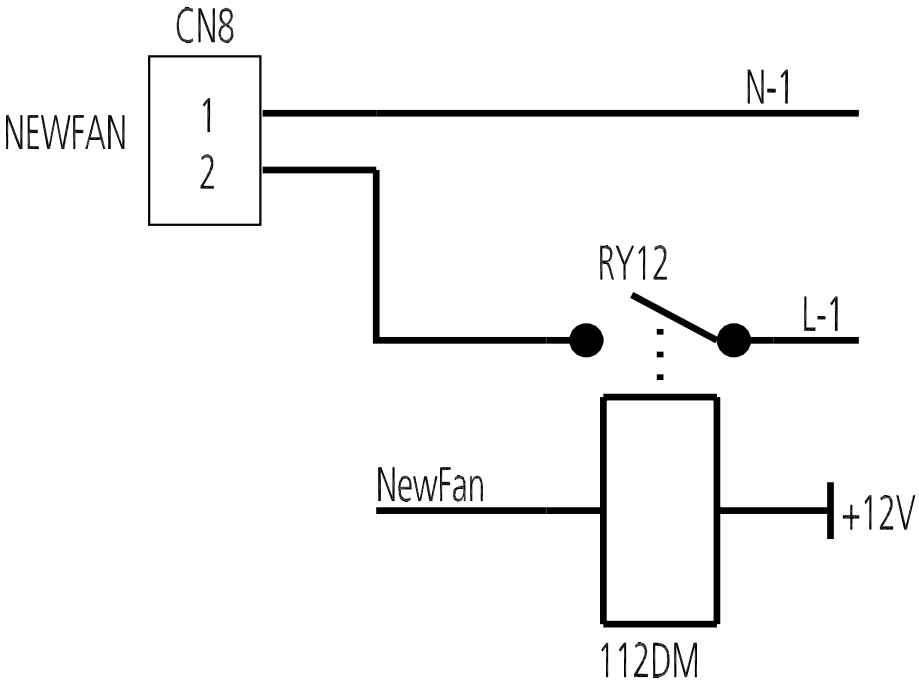

10.2 Micro-Switch Introduce:

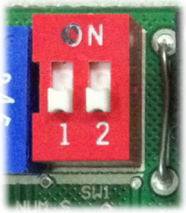

Anti-cold air	
SW1	FAN MOTOR STOP-TEM
ON 1 2	24 Factory setting
ON 1 2	15
ON 1 2	8
ON 1 2	According to the EEPROM setting

A. Micro-switch SW1 is for selection of indoor fan stop temperature (TEL0) when it is in anti-cold wind action in heating mode.

Range: 24°C, 15°C, 8°C, According to EEROM setting (reserved for special customizing).

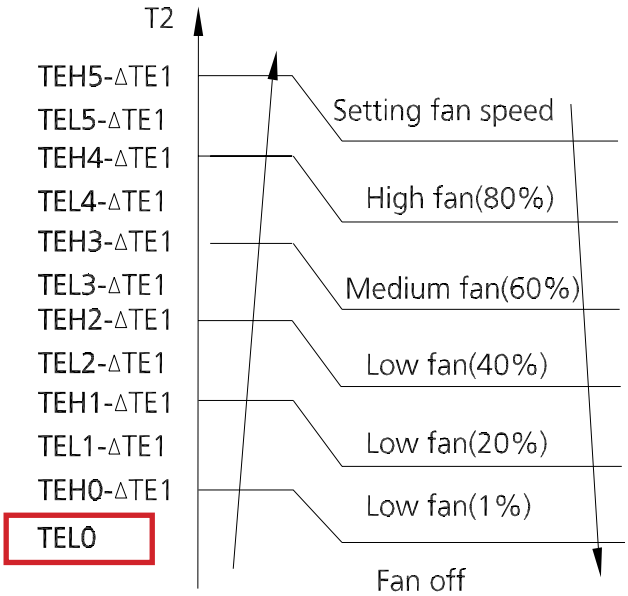



SW2 SWITCH	FOR FAN MOTER CONTROL THEN NO POWER REQUEST.	
ON: STATE	ON	ON
MODE	FAN OFF	FAN ON
Factory Setting	✓	

B.Micro-switch SW2 is for selection of indoor FAN ACTION if room temperature reaches the setponit and the compressor stops.

Range: OFF (anti-cold wind is available in heating mode), Keep running (No anti-cold wind function).



SW3	SWITCH	FOR AUTO-RESTART SETTING
STATE	ON	ON
MODE	REMEMBER	NO_REMEMBER
Factory Setting	✓	

C.Micro-switch SW3 is for selection of auto-restart function.
Range: Active, inactive



SW5	SWITCH	FOR MODE-PRIOR SETTING			
STATE	ON	ON	ON	ON	ON
MODE	HEAT	HEAT	COOL	COOL	
Factory Setting	✓				

D. Micro-switch SW5 is for setting mode priority of multi connection.
Range: Heat, cool.

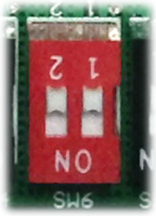

SW6	SWITCH	FOR TEMP.COMPENSATION			
STATE	ON	ON	ON	ON	
VALUE	6	4	2	E function	
Factory Setting	✓				

E.Micro-switch SW6 is for selection of temperature compensation in heating mode. This helps to reduce the real temperature difference between ceiling and floor so that the unit could run properly.

If the height of installation is lower, smaller value could be chosen.

Range: 6°C, 4°C, 2°C, E function (reserved for special customizing)

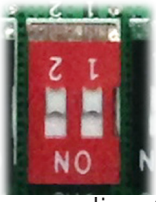

SW7	SWITCH	FOR COOLING & HEATING OR COOLING ONLY SETTING
STATE	ON	ON
MODE	COOLING& HEATING	COOLING ONLY
Factory Setting	✓	

F.Micro-switch SW7 is for setting cooling &heating or cooling only.

Range: cooling &heating, cooling.

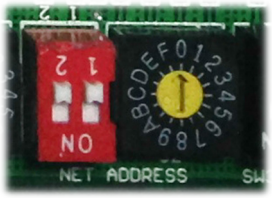

SWITCH	FOR CCM UNIT ADDRESS	
S2 + S1		
ADDRESS	0~15	16~31
Factory Setting	✓	
S2 + S1		
ADDRESS	32~47	48~63
Factory Setting		

G.Micro-switch S1 and dial-switch S2 are for address setting when you want to control this unit by a central controller.
Range: 00-63



FOR SETTING POWER(DC MOTOR MODEL ONLY)										
ENC1										
CODE	0	1	2	4	5	7	8	9	A	B
POWER	20	26	32~35	36~53	54~71	72~90	91~105	106~140	141~160	161~200
FACTORY SETTING	ACCORDING TO RELATED MODEL.									

H. Dial-switch ENC1: The indoor PCB is universal designed for whole series units from 7K to 68K. This ENC1 setting will tell the main program what size the unit is.

NOTE: Usually there is glue on it because the switch position cannot be changed at random unless you want to use this PCB as a spare part to use in another unit. Then you have to select the right position to match the size of the unit.

“20” means 2kW (7K),“105” means 10.5kW(36K), and so on.

Indoor Unit-Super Slim Cassette

Contents

1. Feature....2
2. Dimensional Drawings....5
3. Part names....6
4. Service Place....6
5. Accessories....7
6 Air Velocity and Temperature Distributions....8
7. Capacity Tables....32
8. Noise Criterion Curves....53
9. Electrical Characteristics....55
10. Electrical Wiring Diagrams....56

1. Feature

1.1 360° Air Flow

- 360°directional wind can deliver air evenly throughout every corner in any space, reducing hot and cold spots in the room.

1.2 Easy Installation

- The Cassette is much slimmer due to the redesigned heat exchanger and overall structures. It now requires less space for installation.

1.3 Reserved Air Outlet for Duct

- The cassette unit is equipped with reserved connection for air outlet at the side of the indoor unit. It can connect to an air duct to cool a small room nearby.

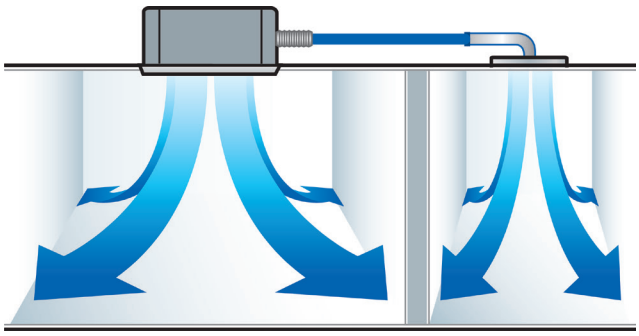

1.4 Reserved remote on-off and alarm ports(Optional for fixed-speed units, standard for inverter units)

- Remote on-off: With the reserved ports. a remote switch can be easily connected to realize remote control.
- Alarm: The built-in PCB can output alarm signal, which achieve setting up an external alarm light or vibration gauge possible.



1.5 Fresh Air

- Fresh air intake function brings you fresh and comfortable air feeling.



1.6 Wired Controller(Optional)

- Compared with infrared remote controller, wired controller can be fixed on the wall and avoid mislaying. It's mainly used for commercial zone and makes air conditioner control more convenient.

2. Dimensional Drawings

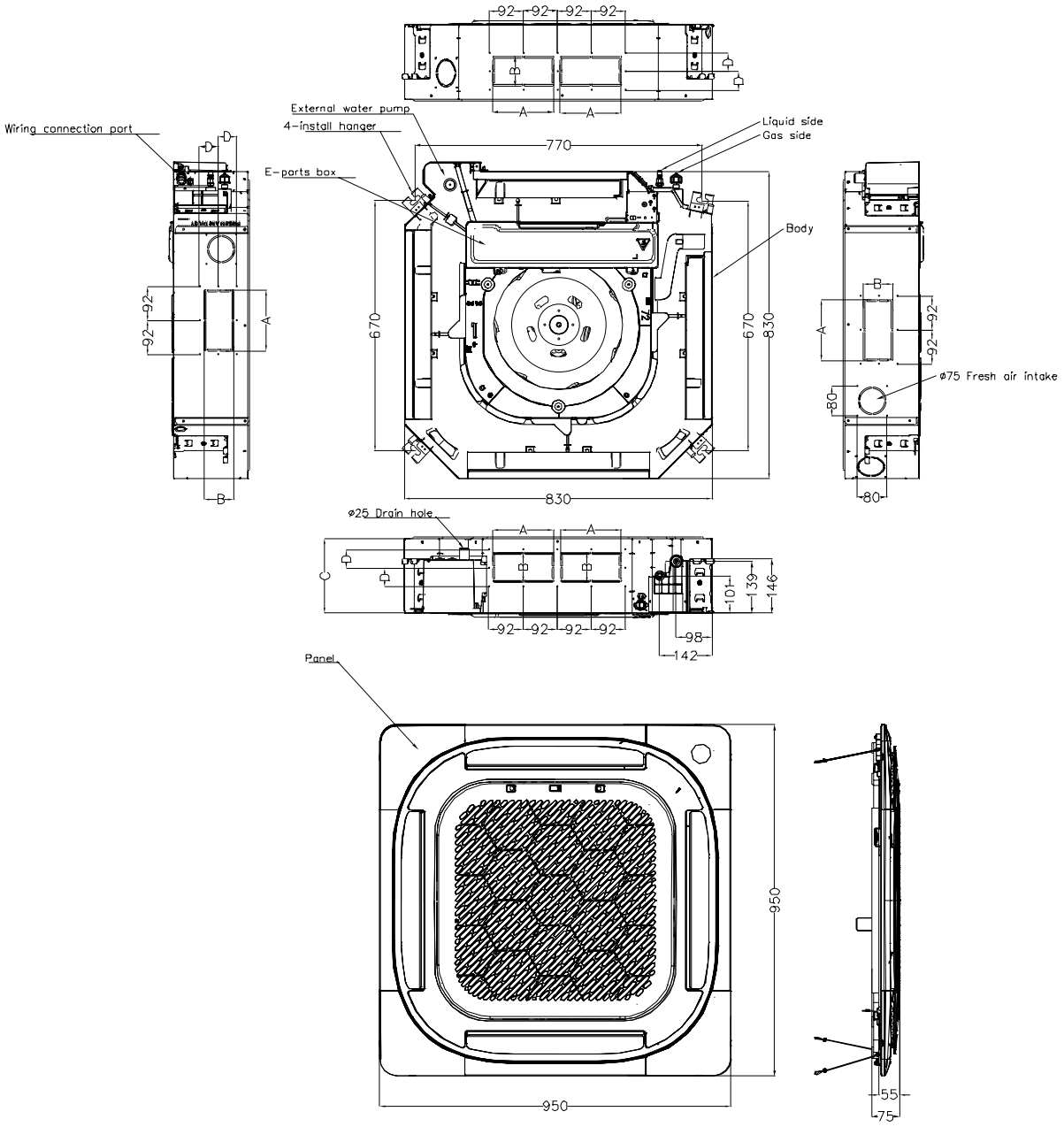

Model (KBtu/h)	Unit	A	B	C	D
24	mm	165	80	205	50
	inch	6.50	3.15	8.07	1.97
30~36	mm	165	100	245	60
	inch	6.50	3.94	9.65	2.36
42~60	mm	165	100	287	60
	inch	6.50	3.94	11.30	2.36

3. Part names

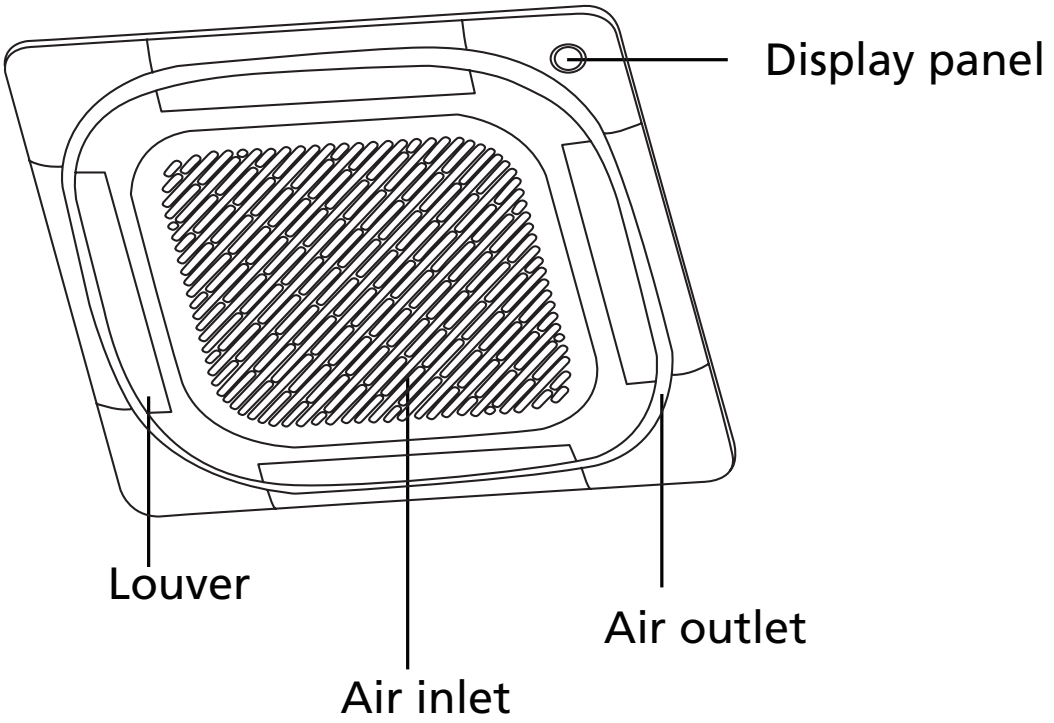

4. Service Place

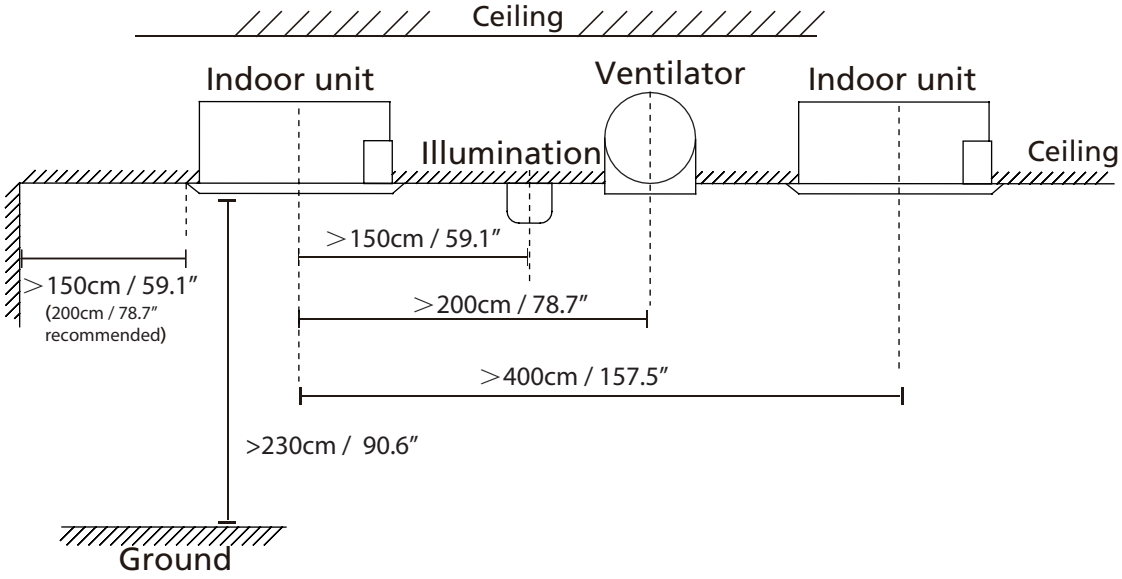

5. Accessories

The air conditioning system comes with the following accessories. Use all of the installation parts and accessories to install the air conditioner. Improper installation may result in water leakage, electrical shock and fire, or equipment failure.

	Name	Shape	Quantity
Indoor unit installation	Installation paper template (some models)	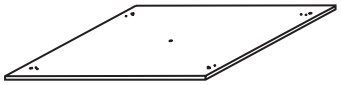	1
Refrigeration Fittings	Soundproof/insulation sheath (some models)		1
	Soundproof/insulation sheath (some models)		1
	Copper nut		2
Drainpipe Fittings	Outlet pipe sheath(some models)		1
	Outlet pipe clasp(some models)		1
	Drain joint (some models)	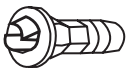	1
	Seal ring (some models)		1
	Throat bander		2
EMC Magnetic Ring (some models)	Magnetic ring (wrap the electric wires S1 & S2 (P & Q & E) around the magnetic ring twice)	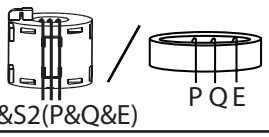	1
	Magnetic ring (Hitch it on the connective cable between indoor unit and outdoor unit after installation)	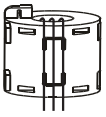	1
Installation Accessory (some models)	Ceiling hook	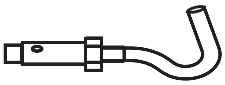	4
	Suspension bolt		4
	Throttle		1
	Anti-shock rubber		1
	Manual		2-4

Optional accessories:

- There are two types of remote controls: wired and wireless.
- Select a remote controller based on customer preferences and requirements and install in an appropriate place.
- Refer to catalogues and technical literature for guidance on selecting a suitable remote controller.

6. Air Velocity and Temperature Distributions

18K

Discharge Angle 30°

Cooling airflow velocity distributions

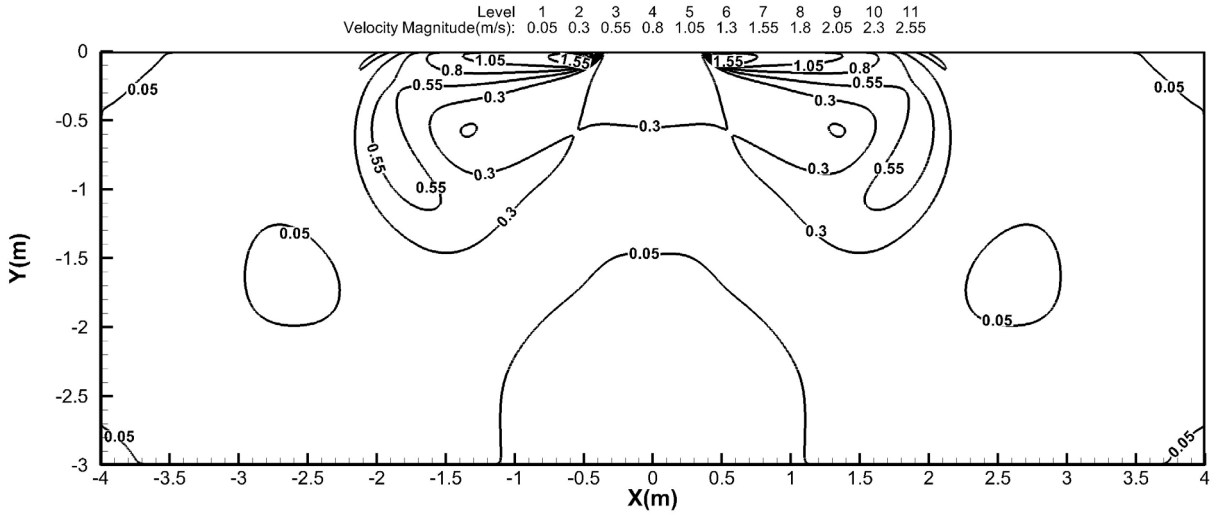

Cooling temperature distributions

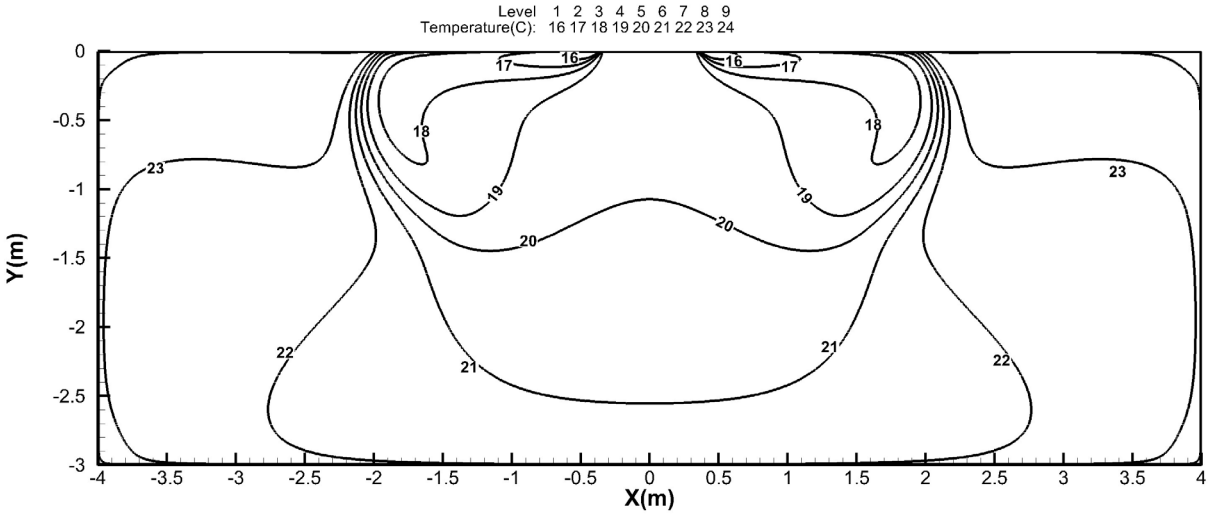

18K

Discharge Angle 30°

Heating airflow velocity distributions

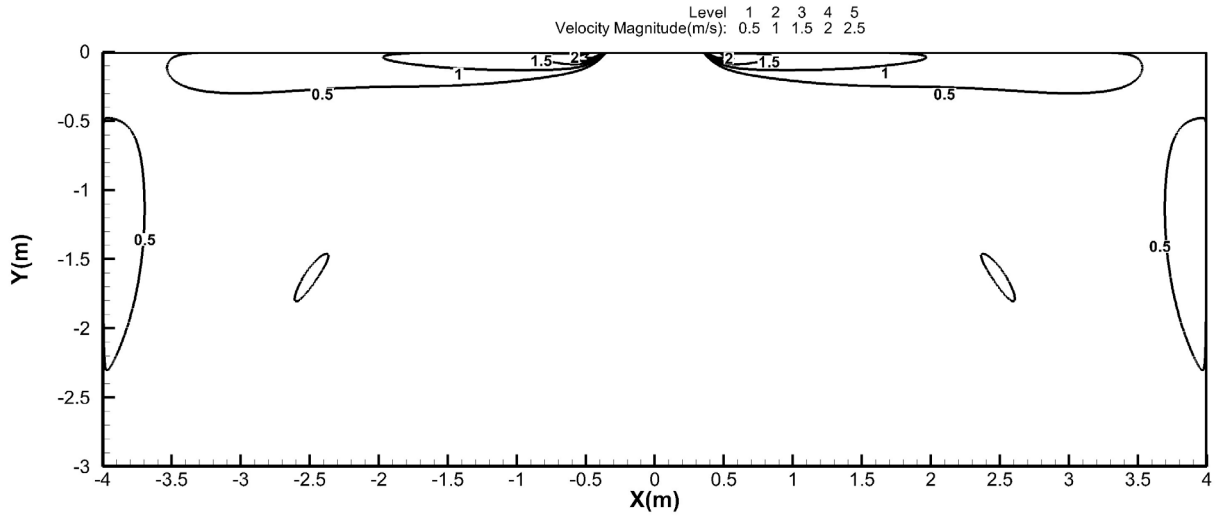

Heating temperature distributions

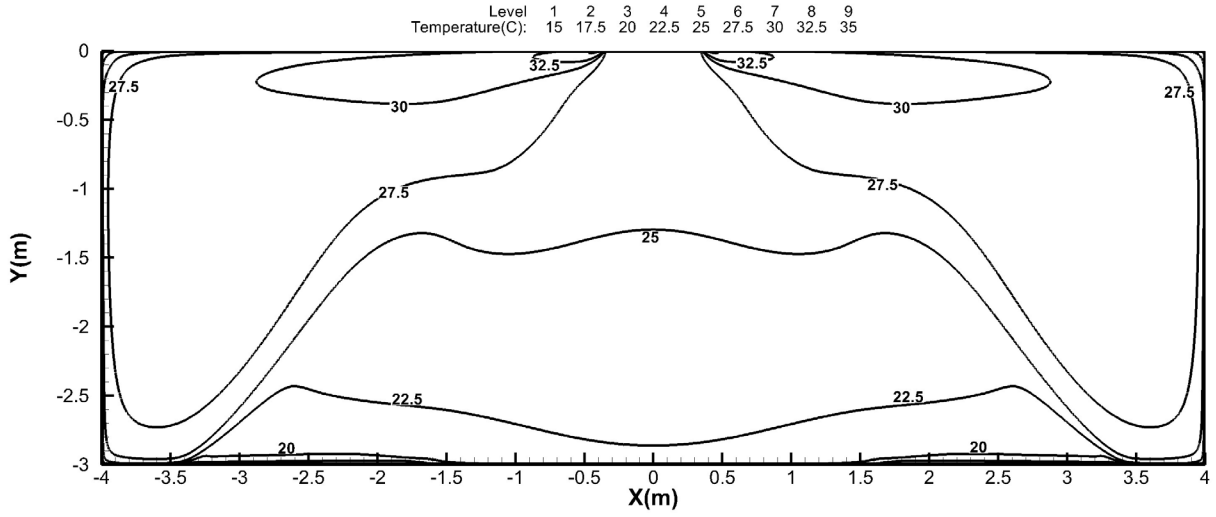

18K

Discharge Angle 60°

Cooling airflow velocity distributions

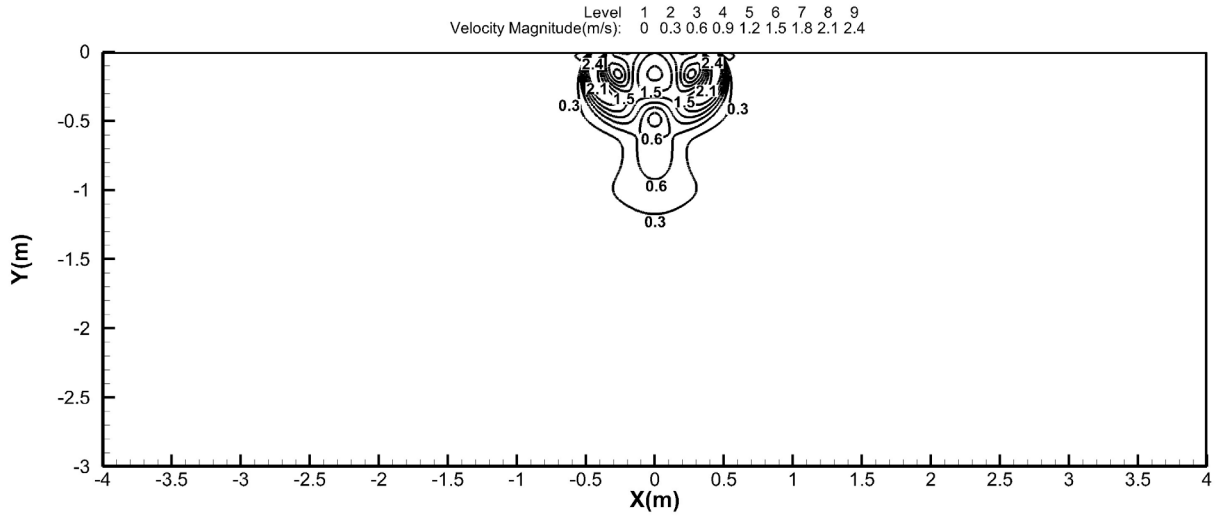

Cooling temperature distributions

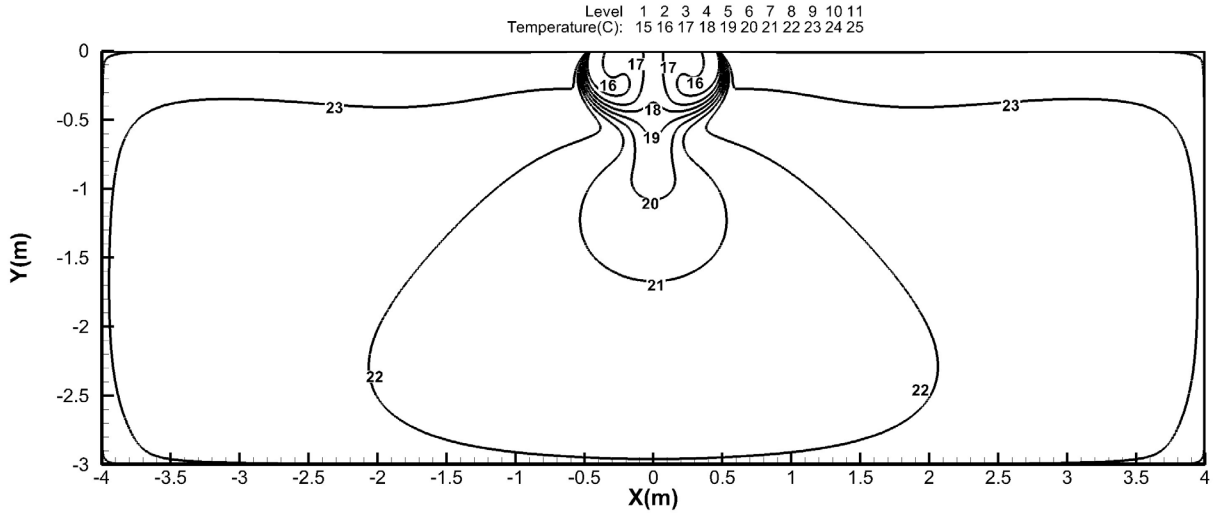

18K

Discharge Angle 60°

Heating airflow velocity distributions

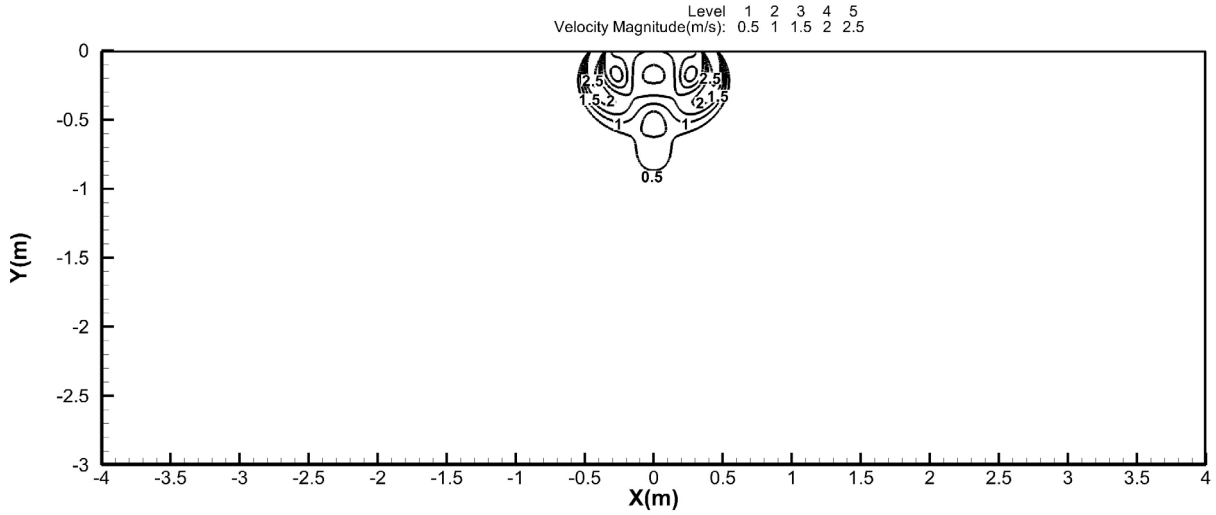

Heating temperature distributions

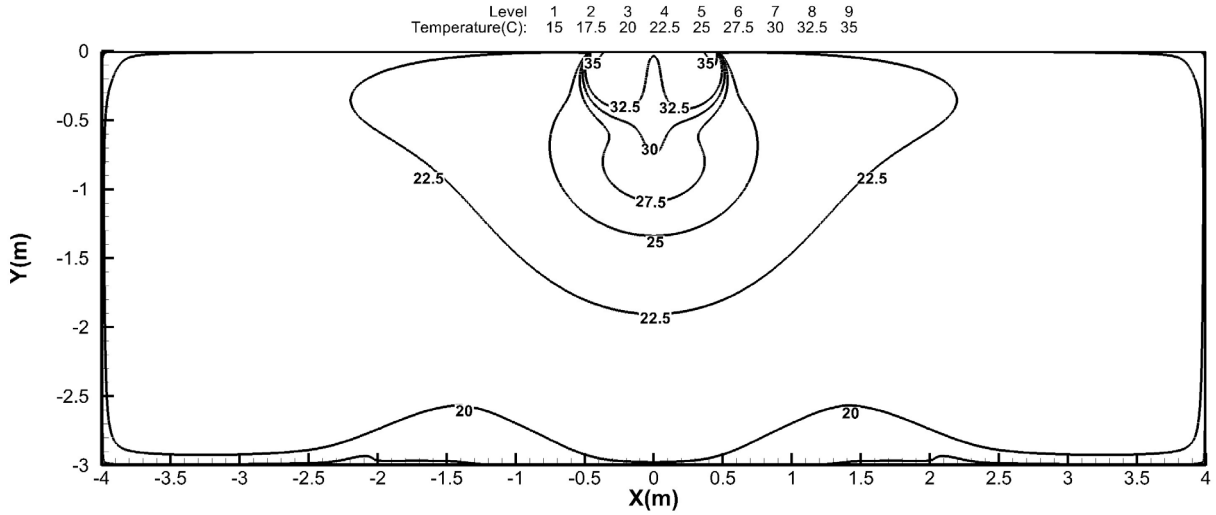

24K

Discharge Angle 30°

Cooling airflow velocity distributions

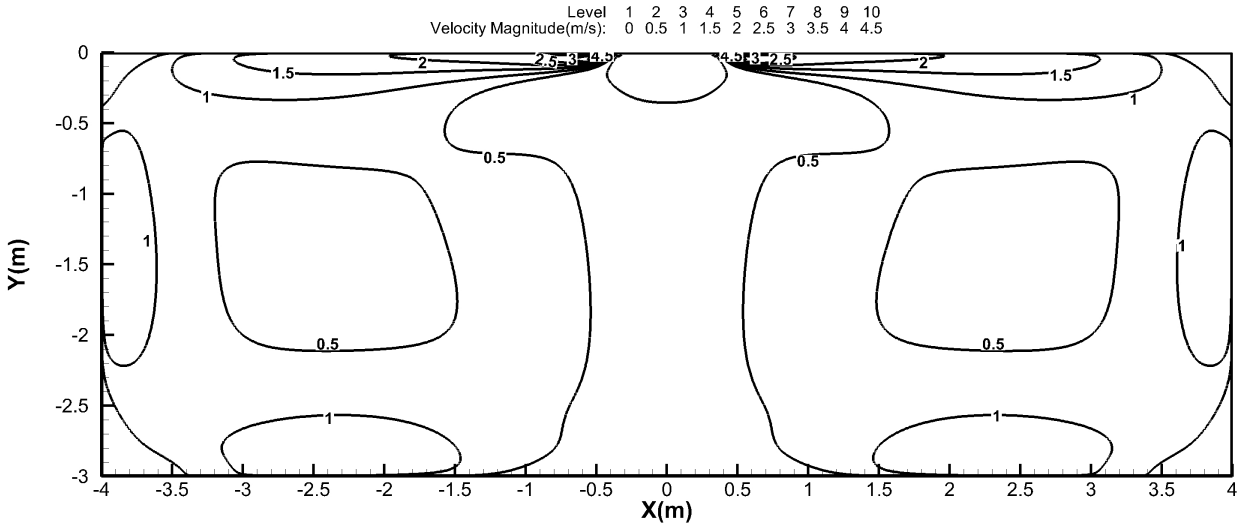

Cooling temperature distributions

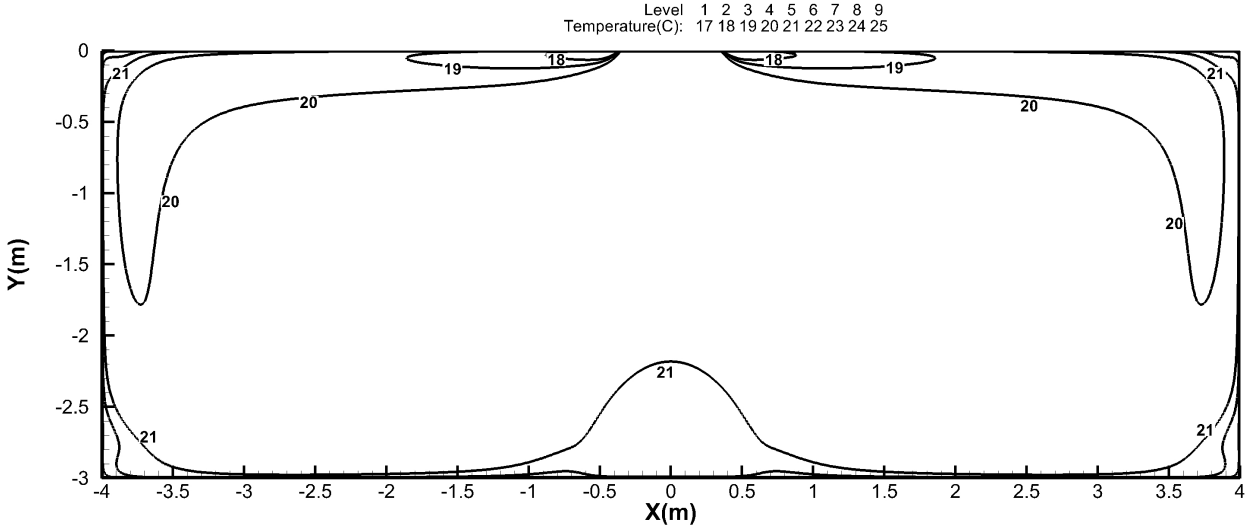

24K

Discharge Angle 30°

Heating airflow velocity distributions

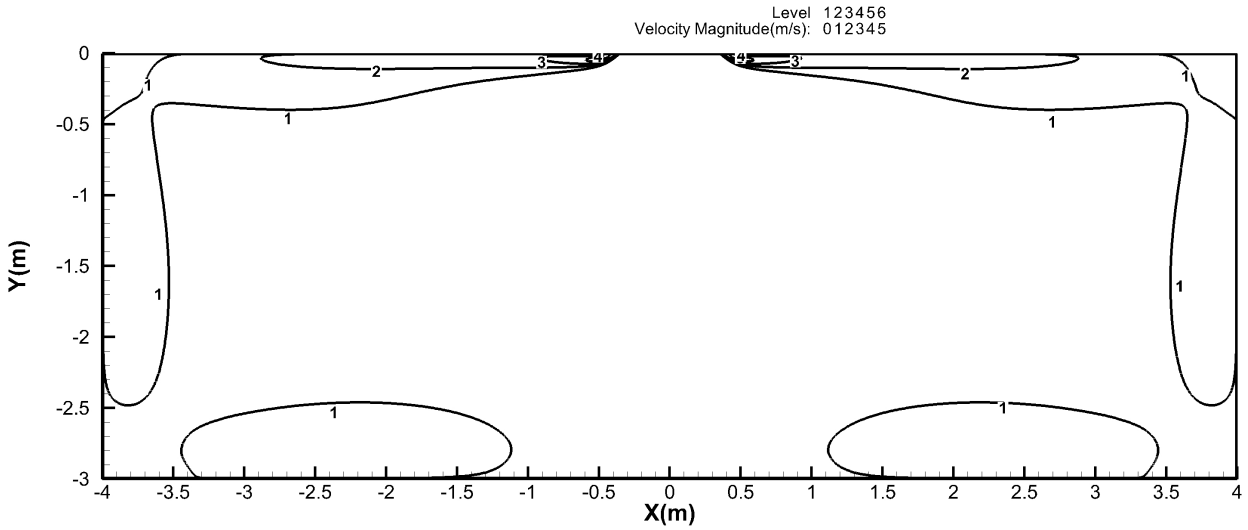

Heating temperature distributions

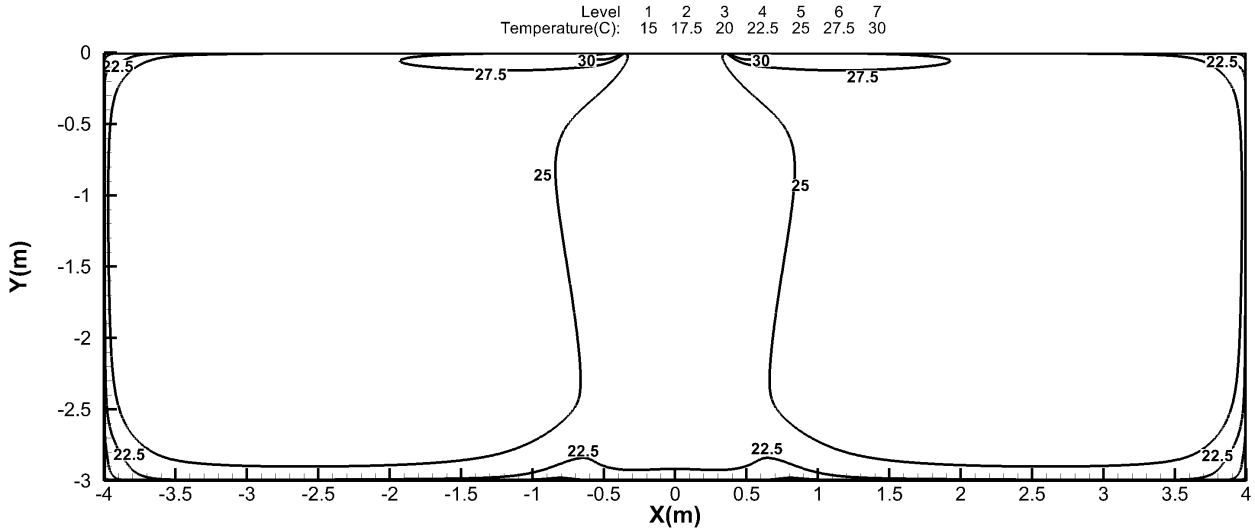

24K

Discharge Angle 60°

Cooling airflow velocity distributions

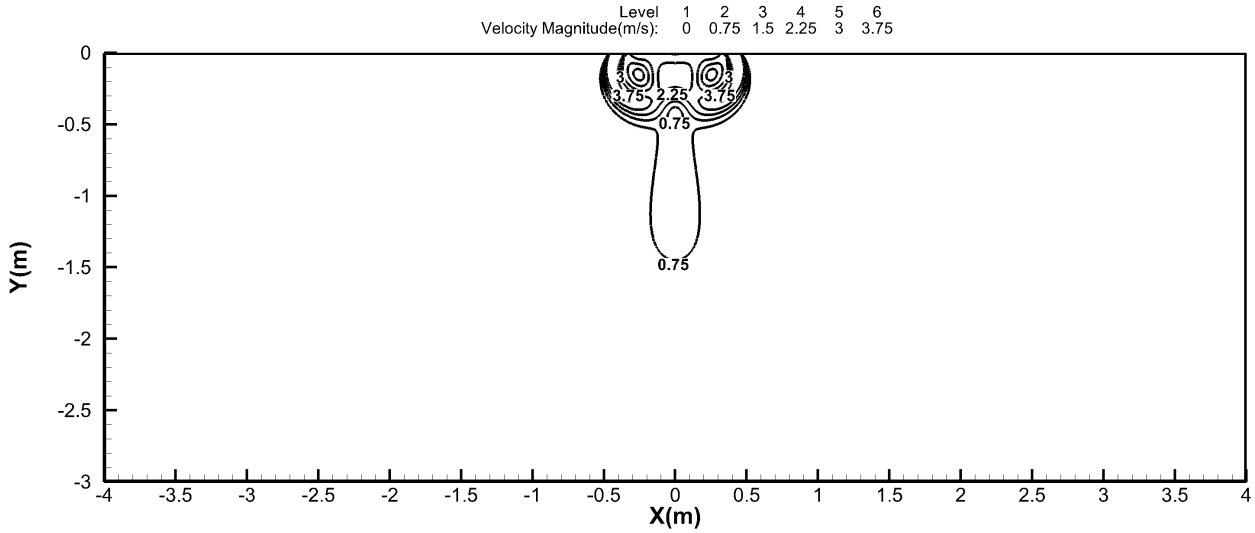

Cooling temperature distributions

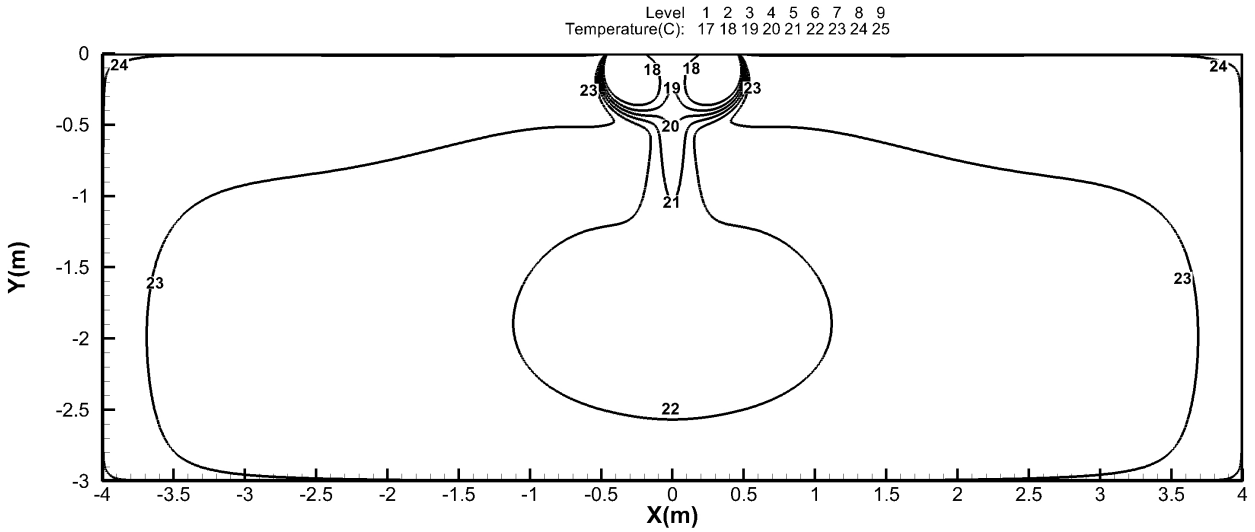

24K

Discharge Angle 60°

Heating airflow velocity distributions

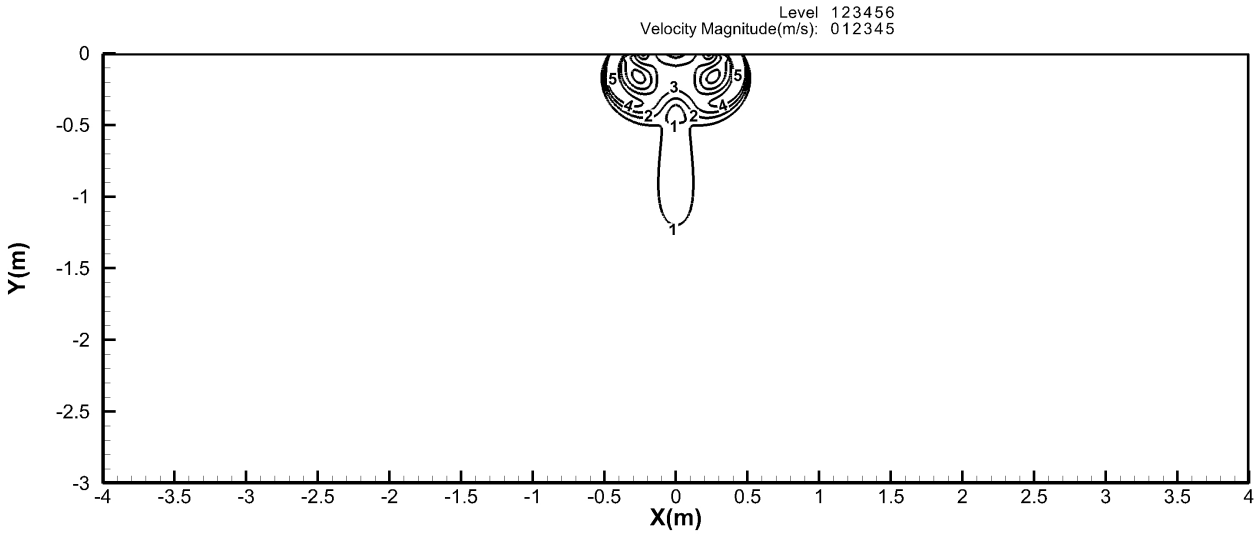

Heating temperature distributions

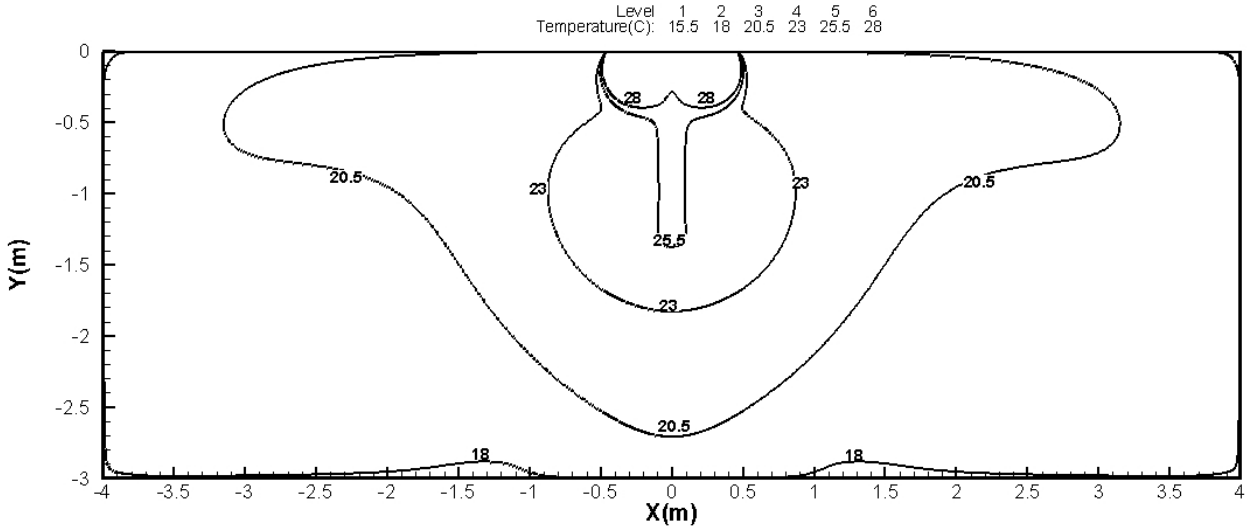

30k

Discharge Angle 30°

Cooling airflow velocity distributions

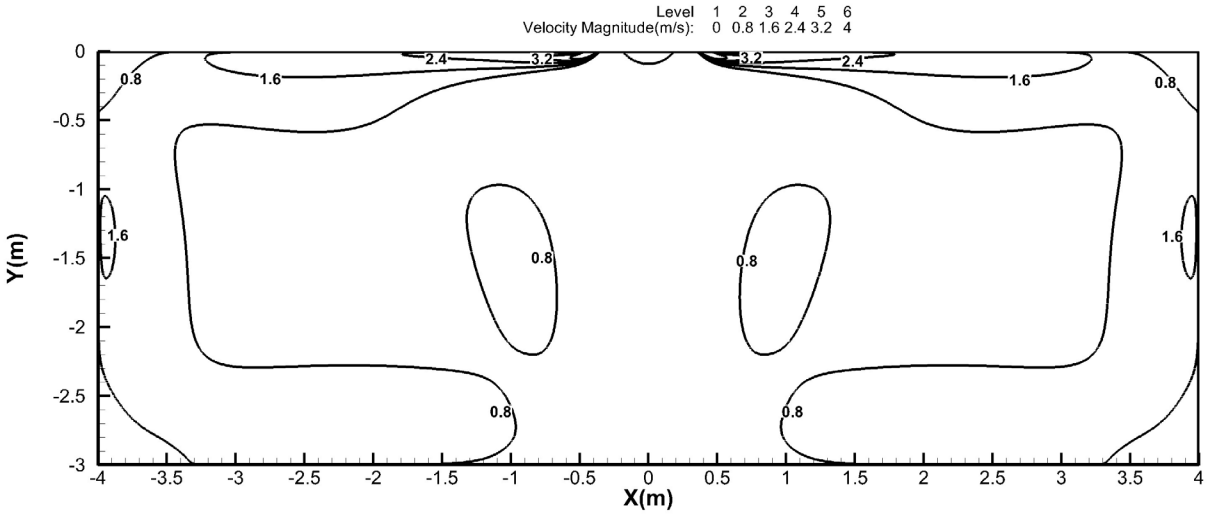

Cooling temperature distributions

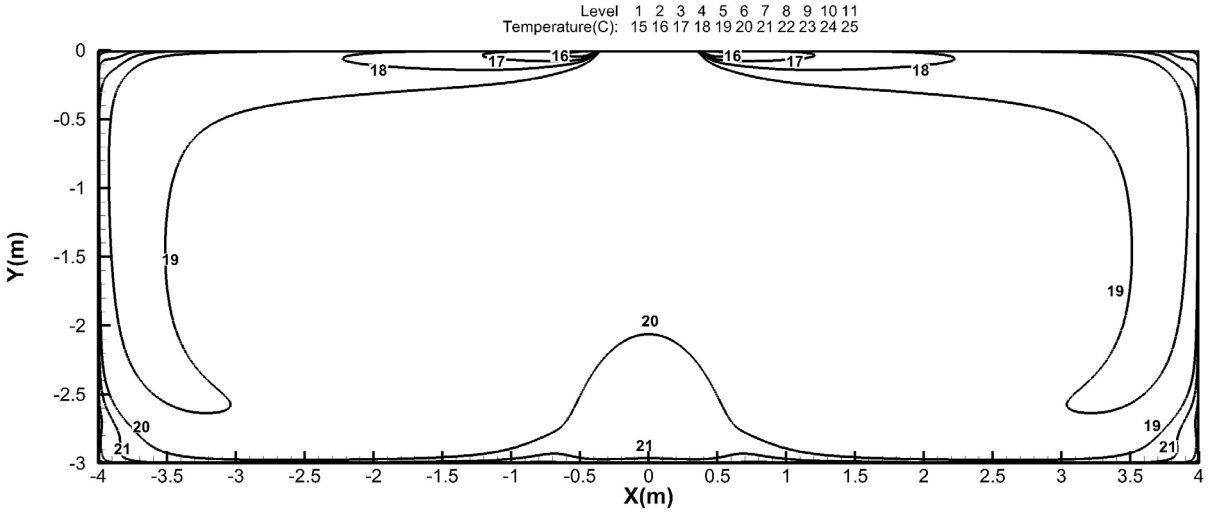

30k

Discharge Angle 30°

Heating airflow velocity distributions

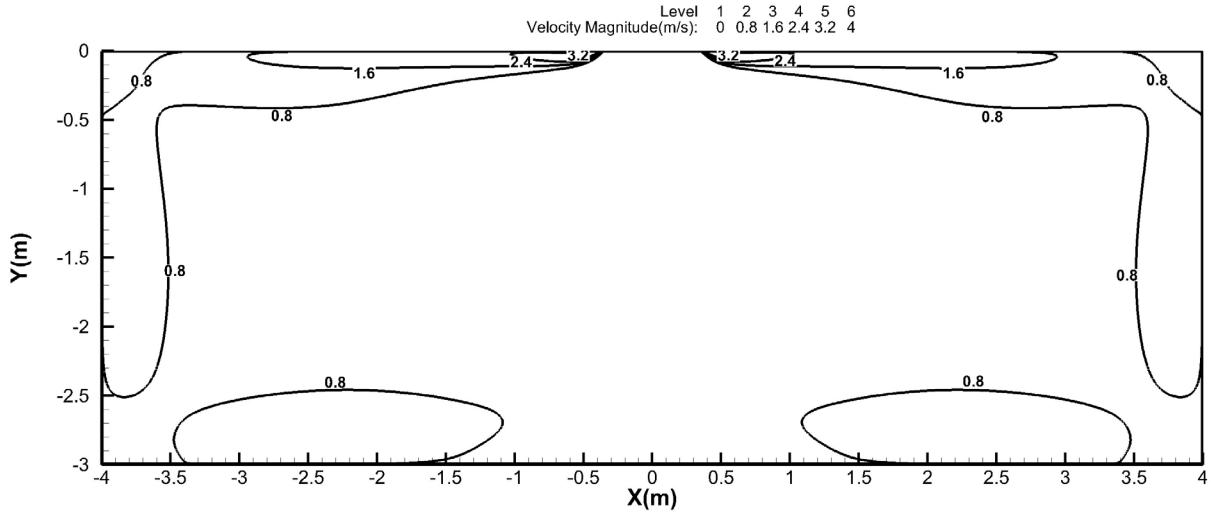

Heating temperature distributions

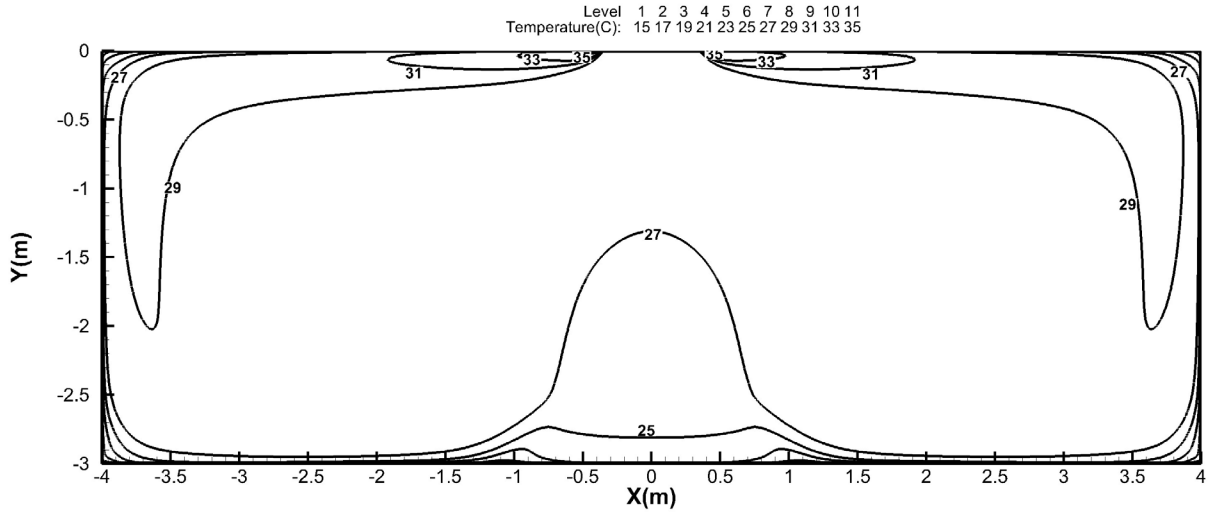

30k

Discharge Angle 60°

Cooling airflow velocity distributions

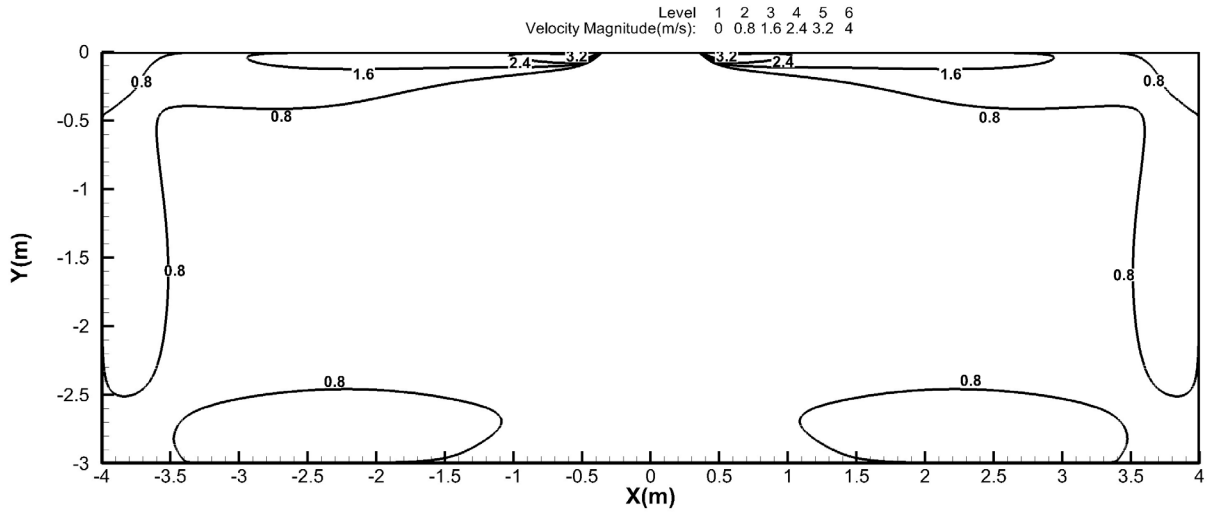

Cooling temperature distributions

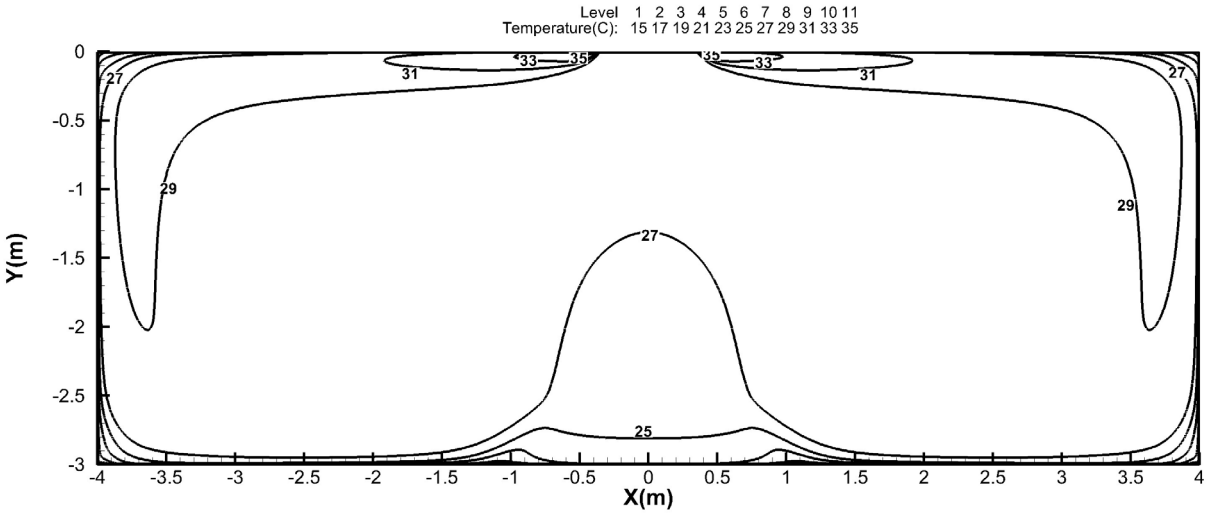

30k

Discharge Angle 60°

Heating airflow velocity distributions

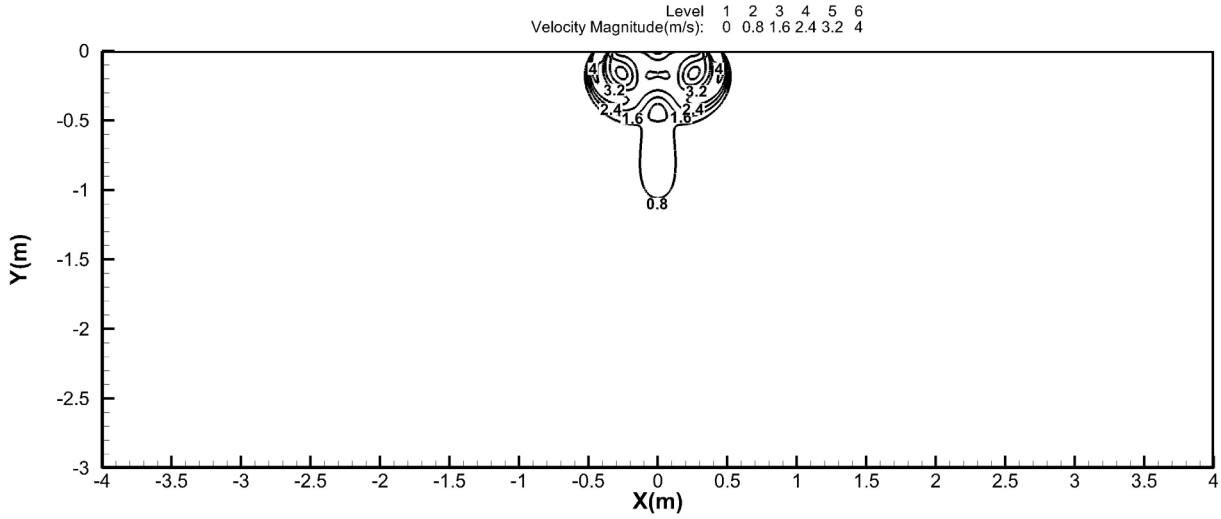

Heating temperature distributions

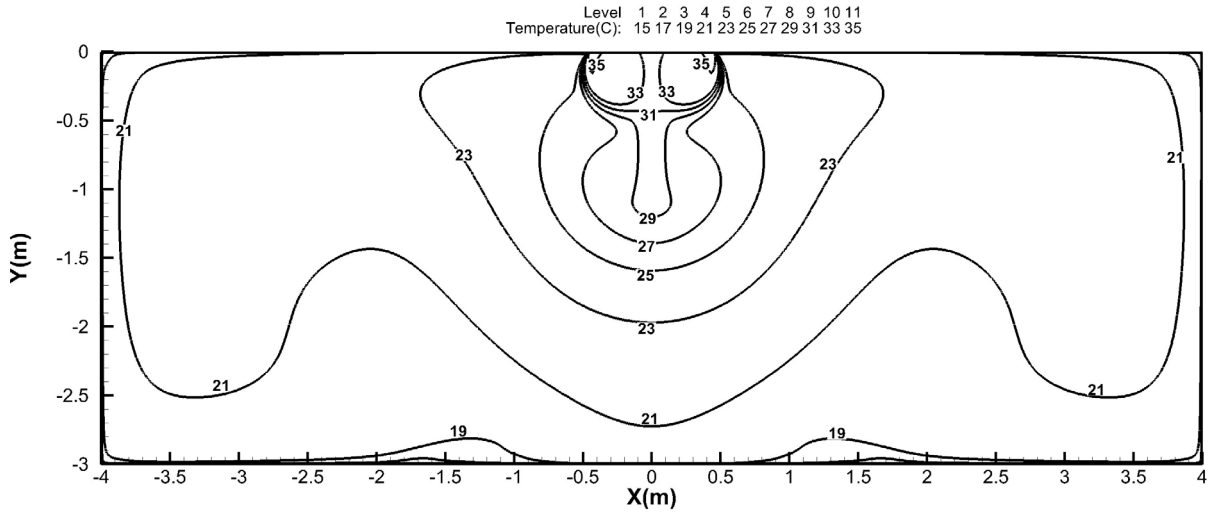

36K

Discharge Angle 30°

Cooling airflow velocity distributions

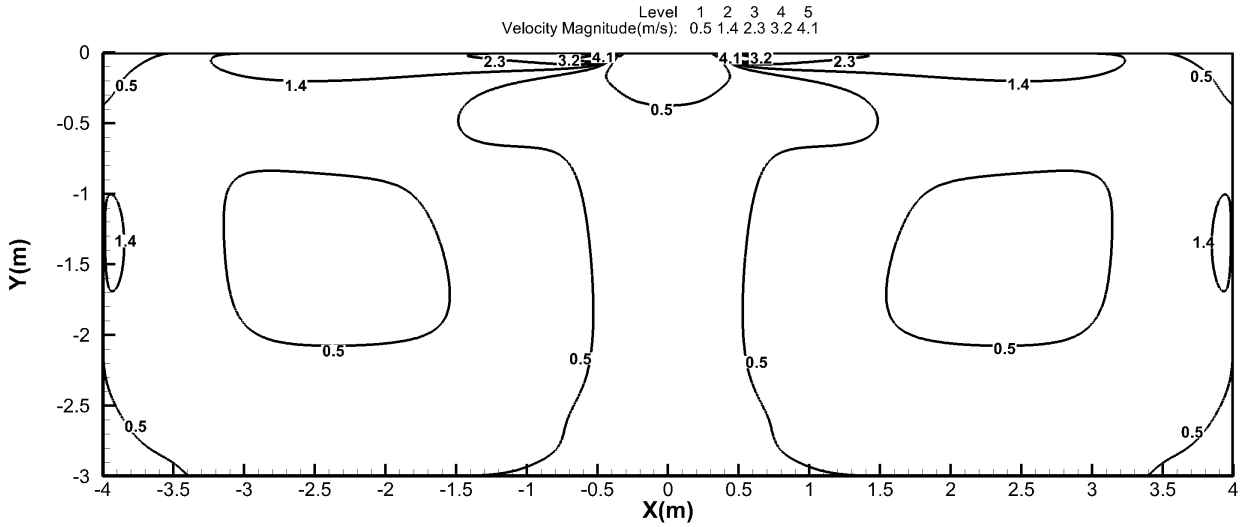

Cooling temperature distributions

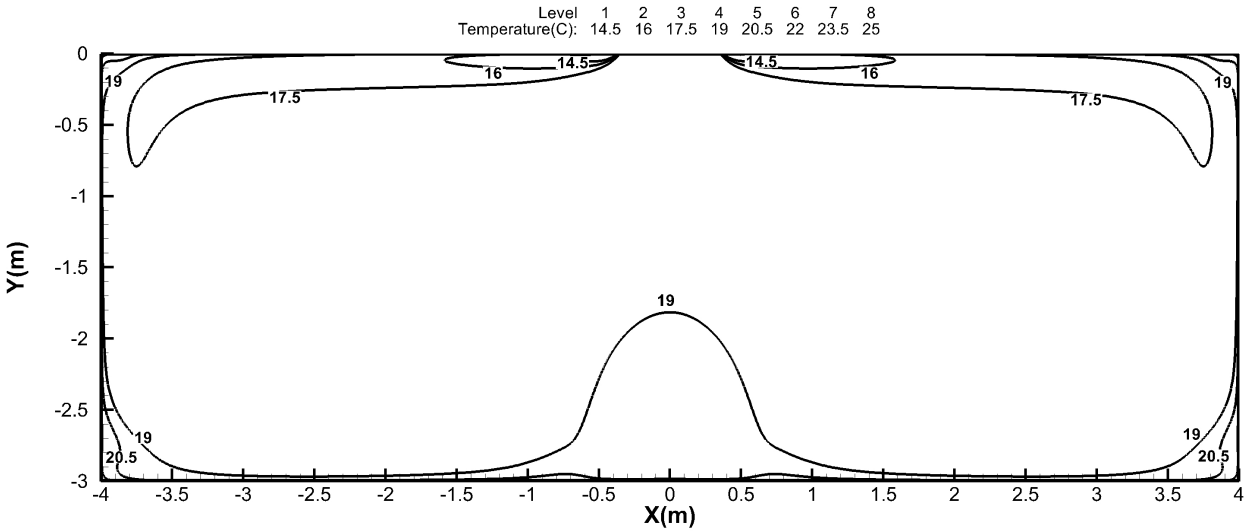

36K

Discharge Angle 30°

Heating airflow velocity distributions

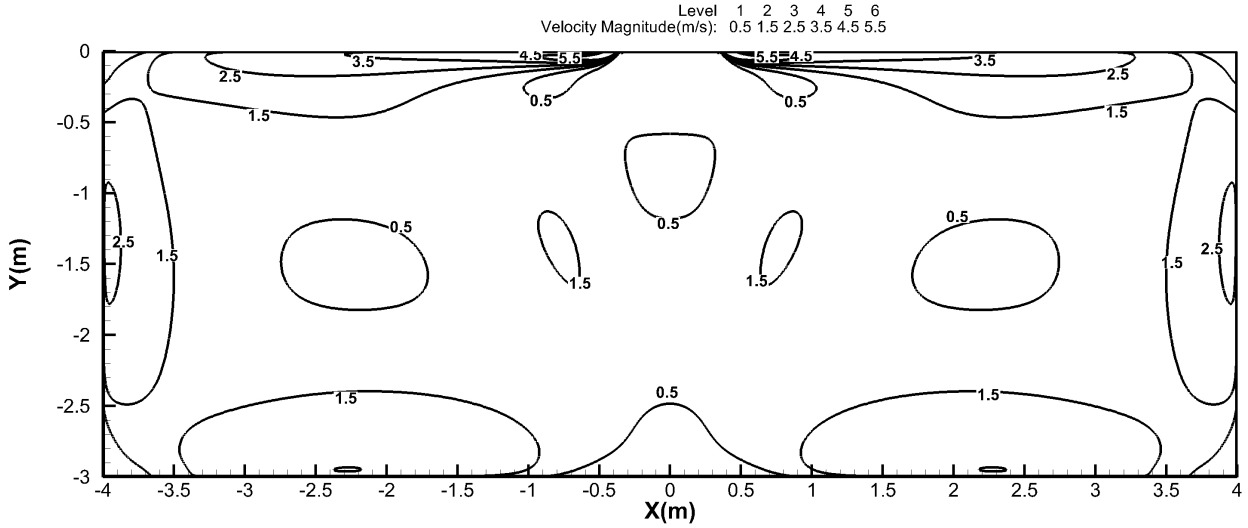

Heating temperature distributions

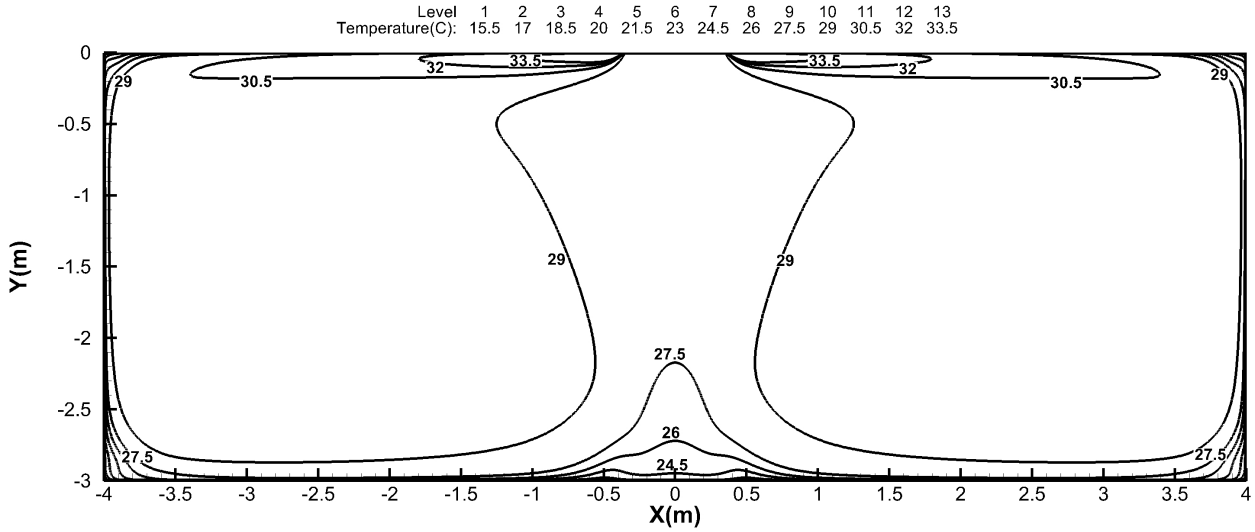

36K

Discharge Angle 60°

Cooling airflow velocity distributions

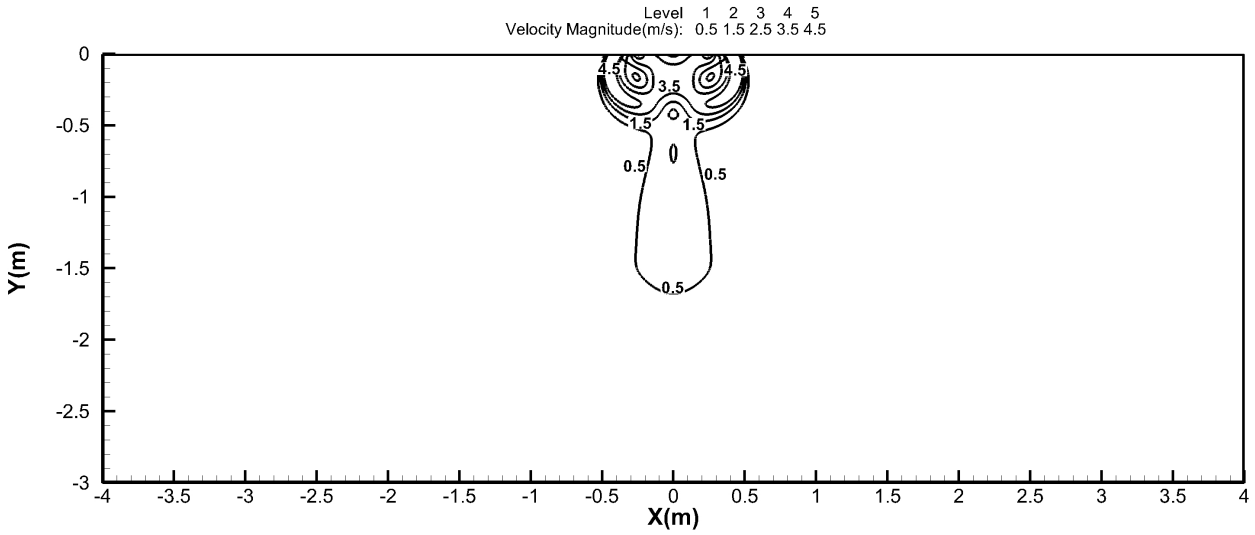

Cooling temperature distributions

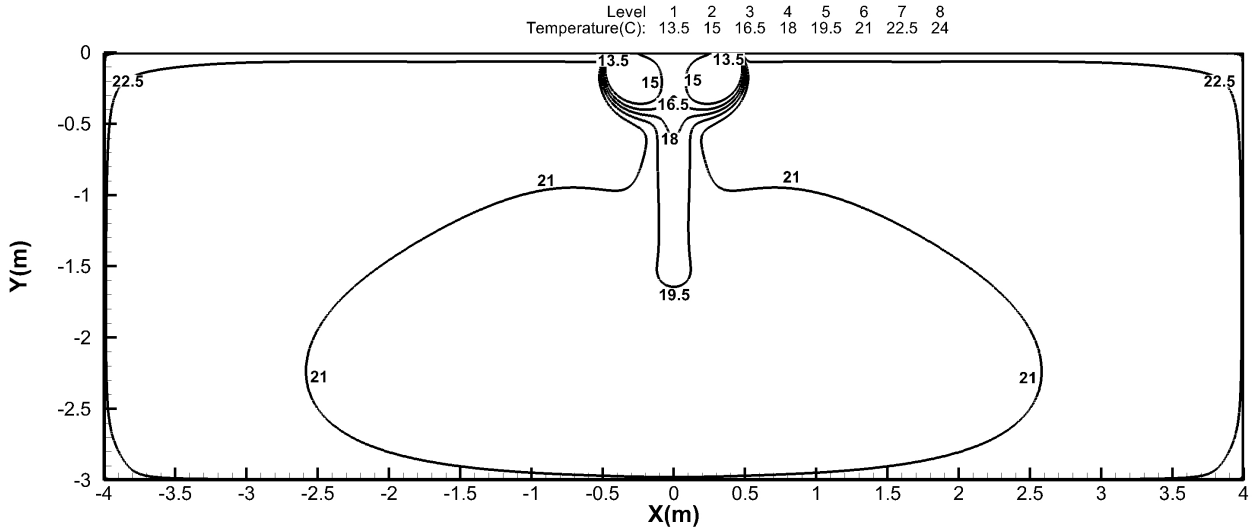

36K

Discharge Angle 60°

Heating airflow velocity distributions

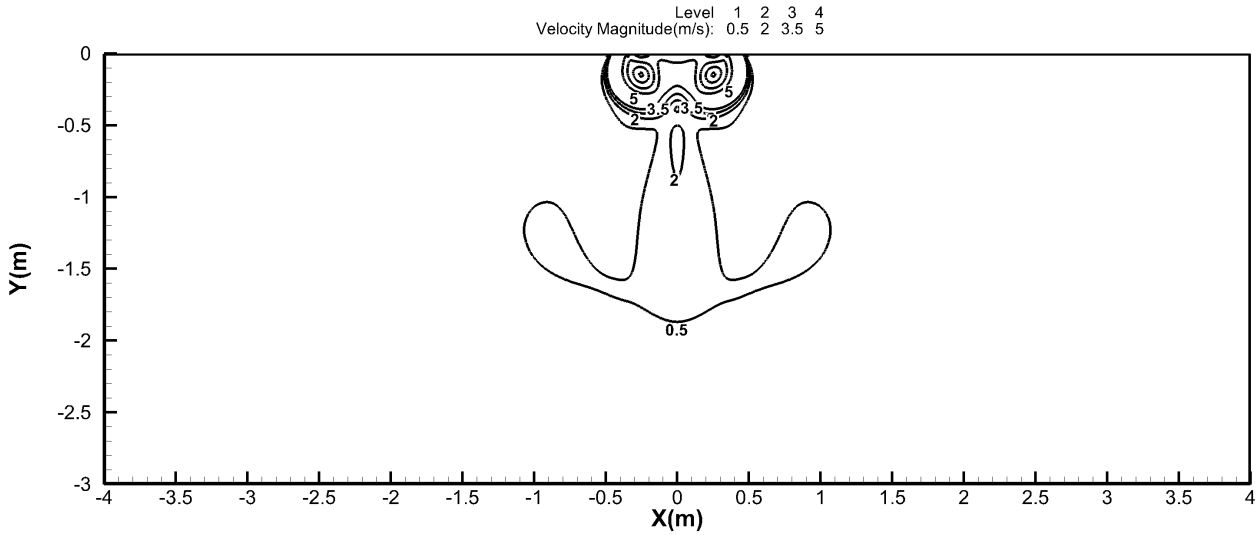

Heating temperature distributions

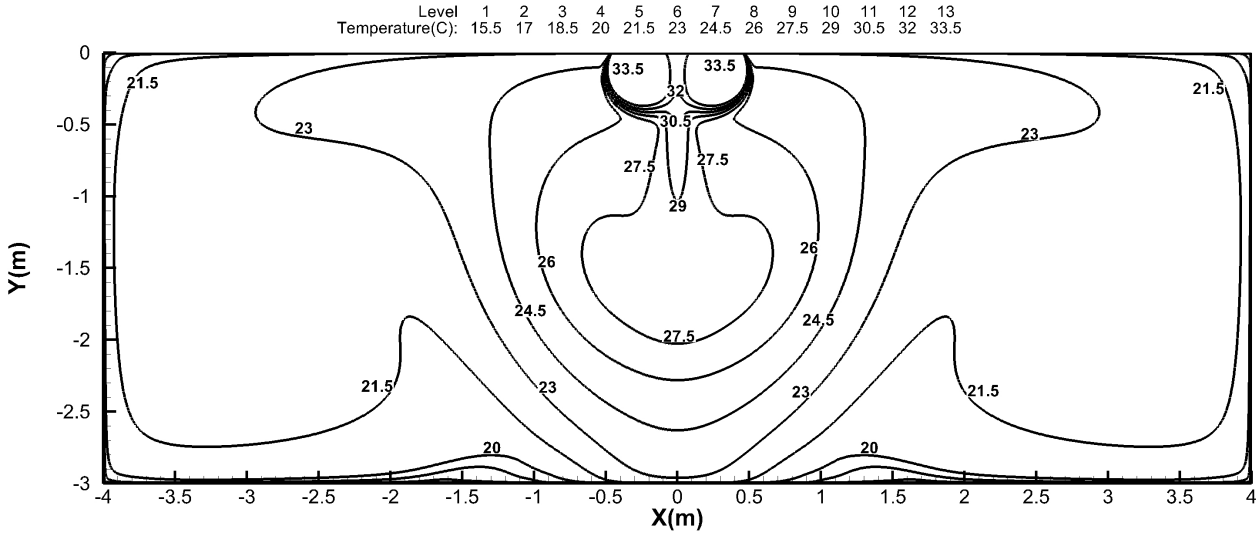

48k

Discharge Angle 30°

Cooling airflow velocity distributions

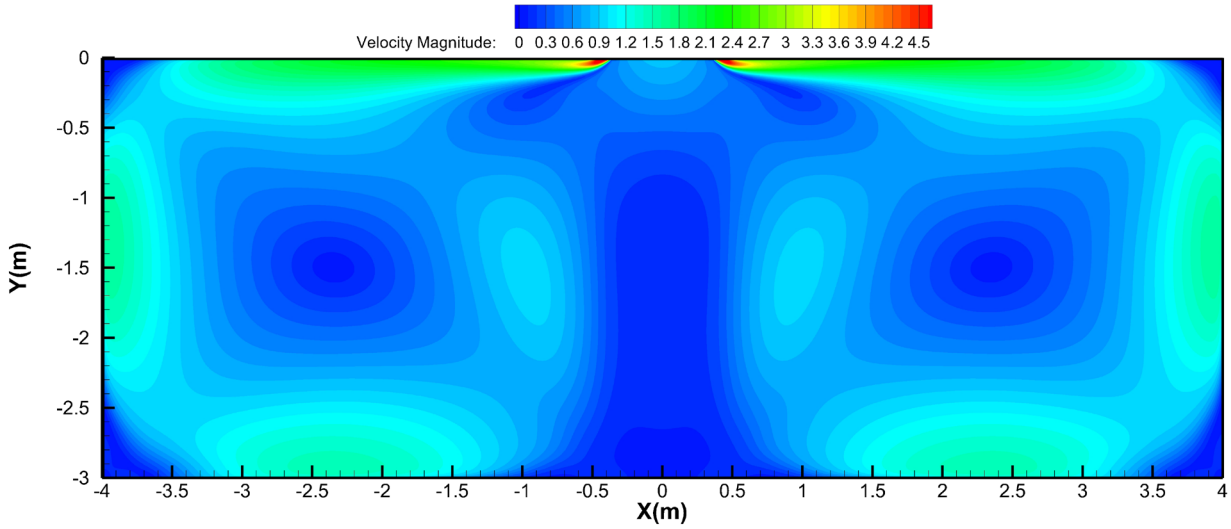

Cooling temperature distributions

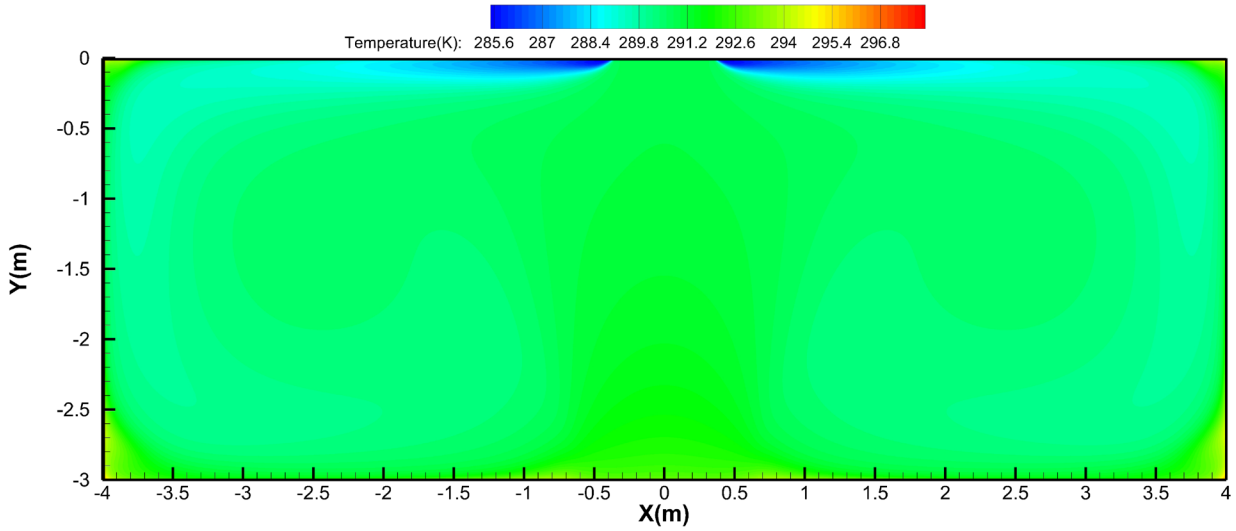

48k

Discharge Angle 30°

Heating airflow velocity distributions

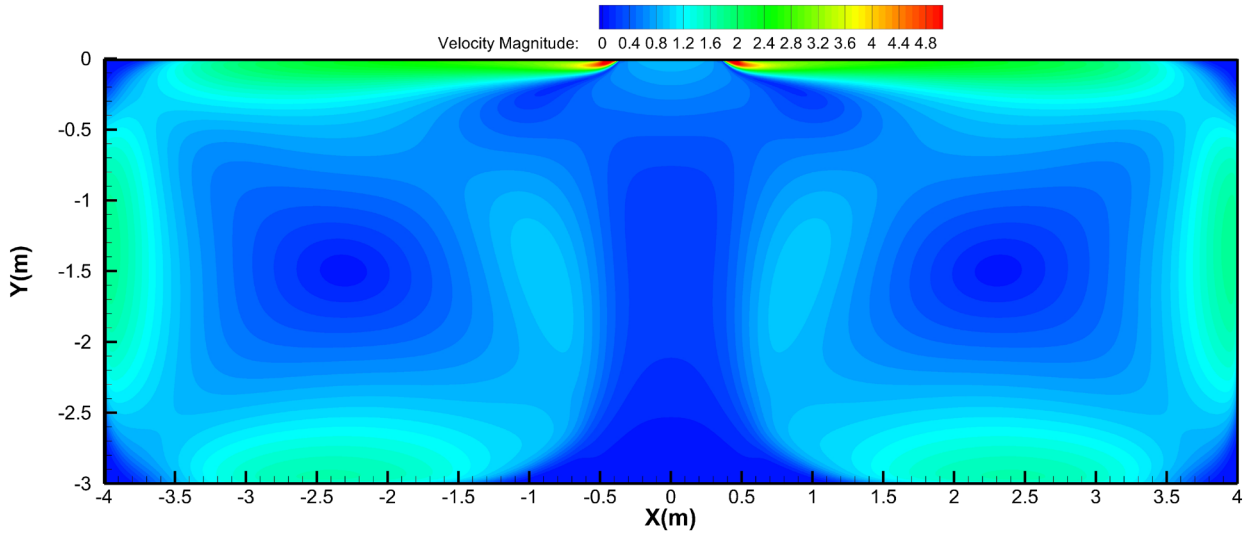

Heating temperature distributions

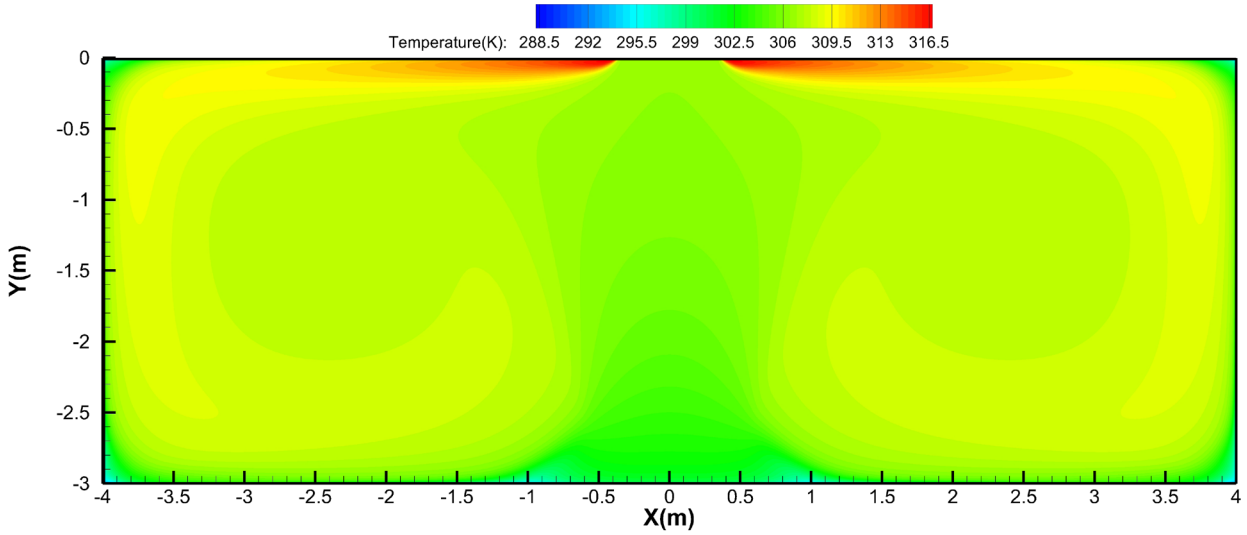

48k

Discharge Angle 60°

Cooling airflow velocity distributions

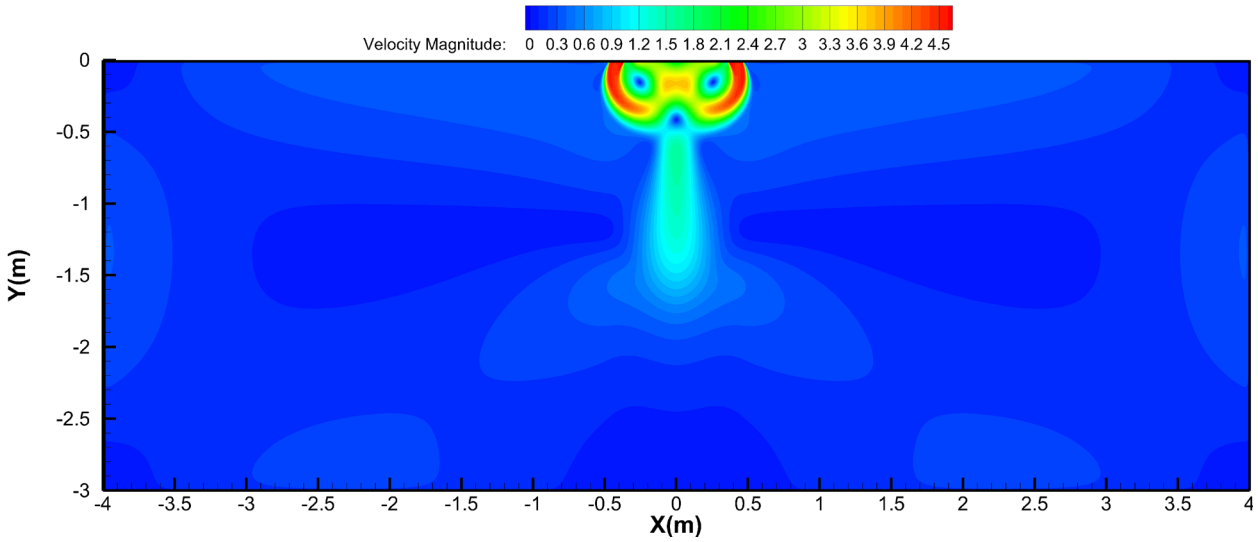

Cooling temperature distributions

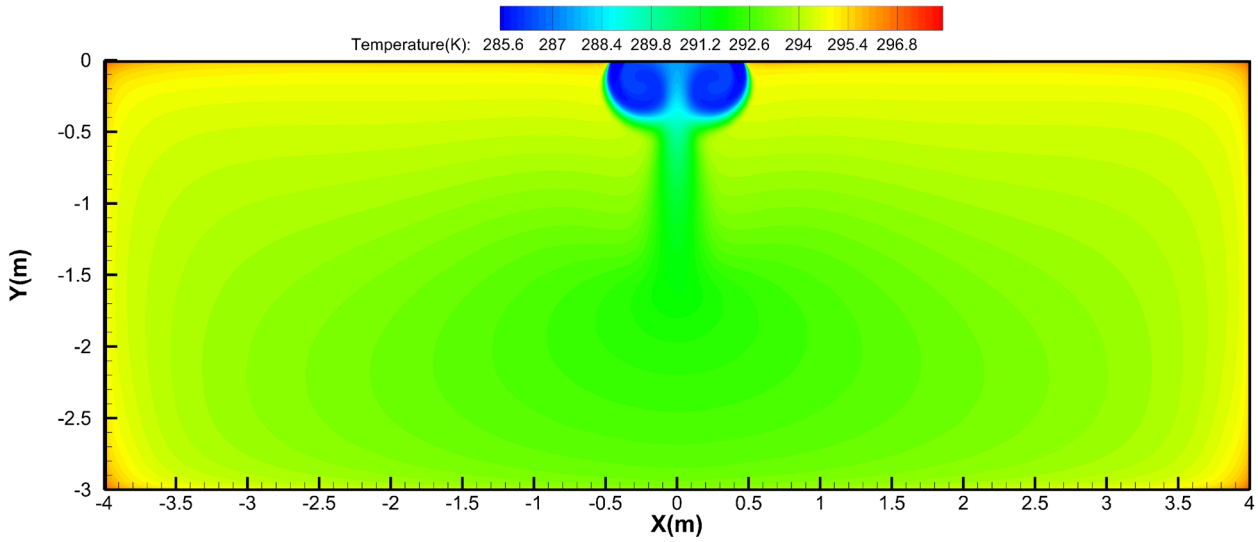

48k

Discharge Angle 60°

Heating airflow velocity distributions

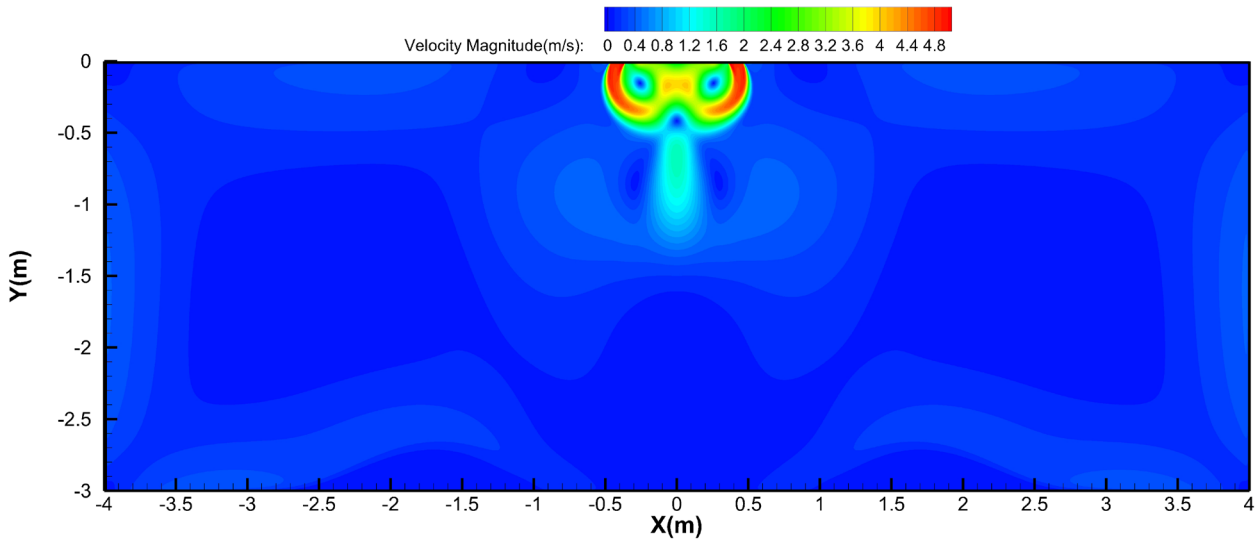

Heating temperature distributions

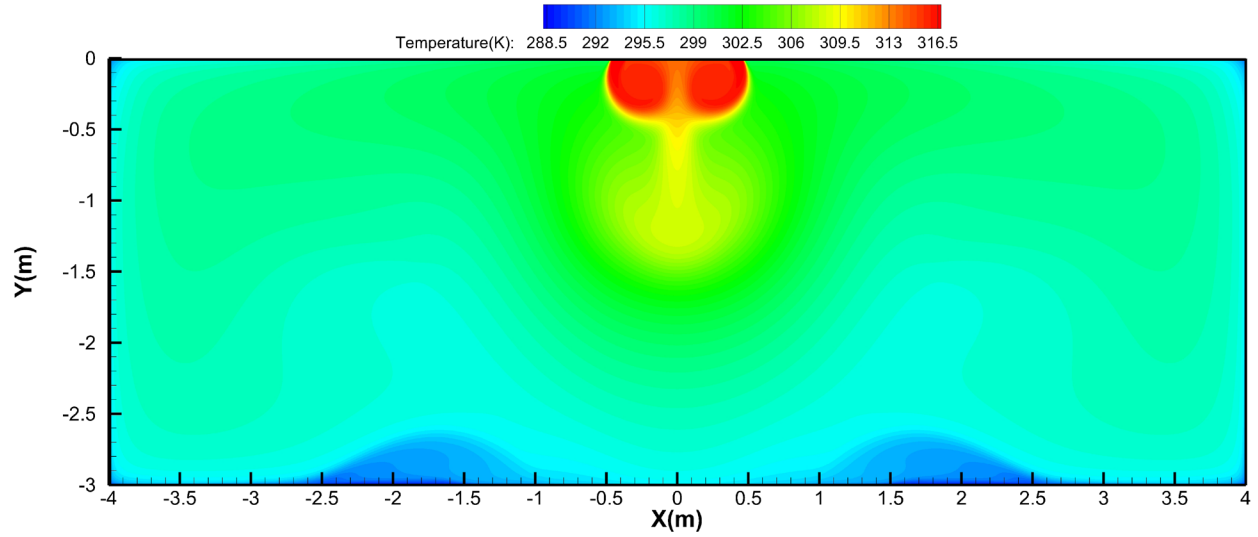

55K

Discharge Angle 30°

Cooling airflow velocity distributions

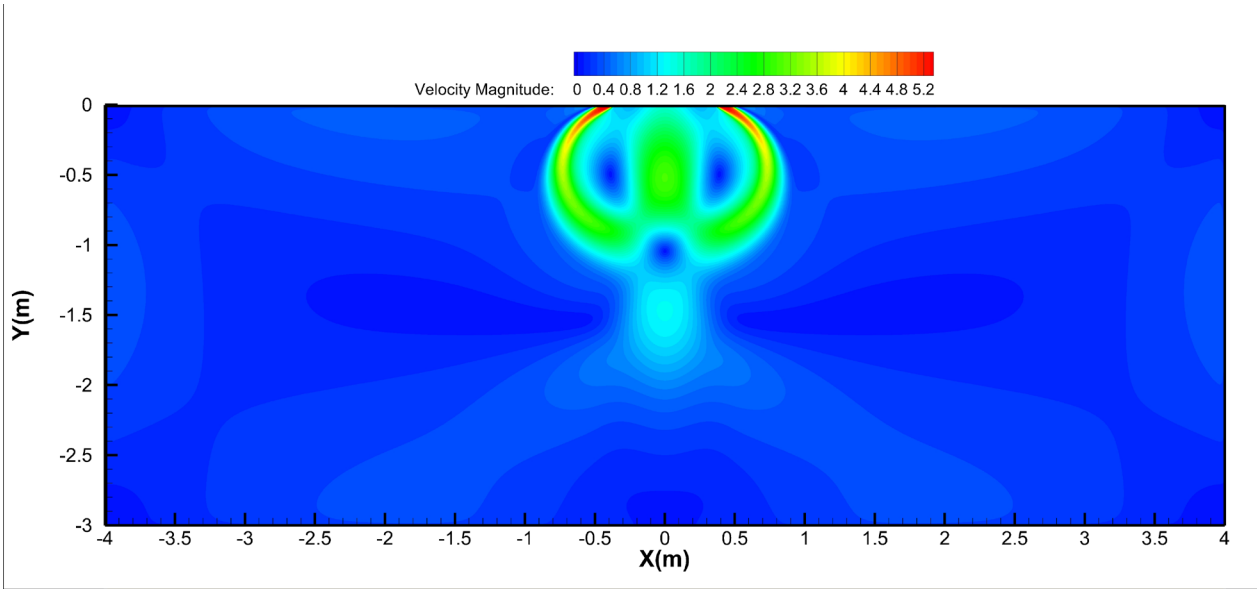

Cooling temperature distributions

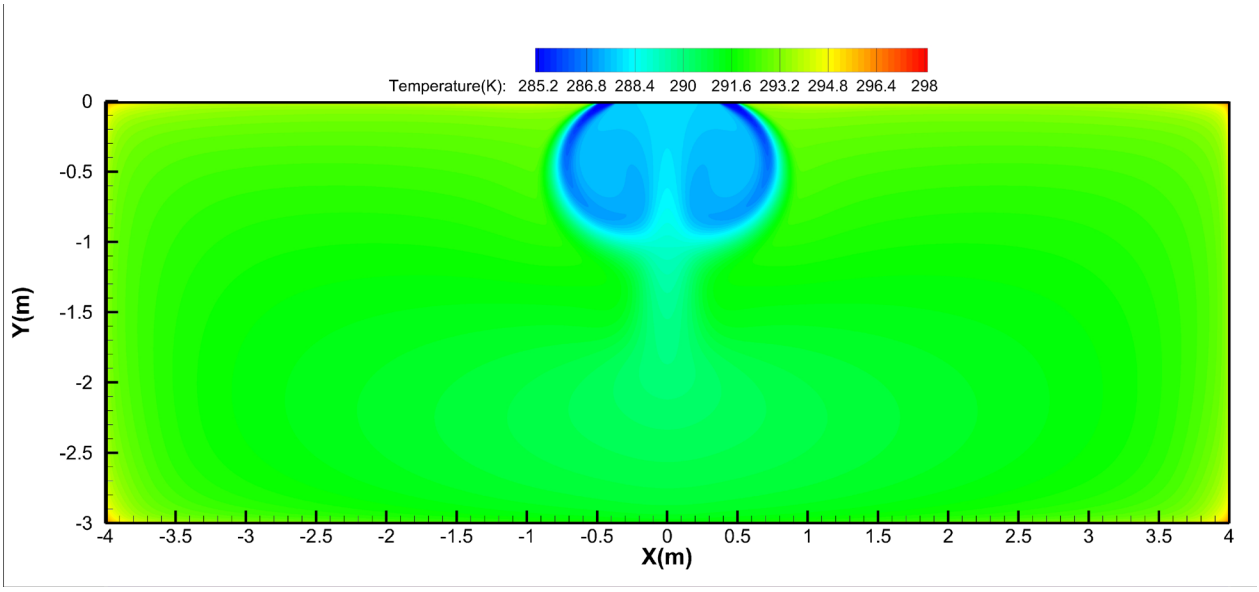

55K

Discharge Angle 30°

Heating airflow velocity distributions

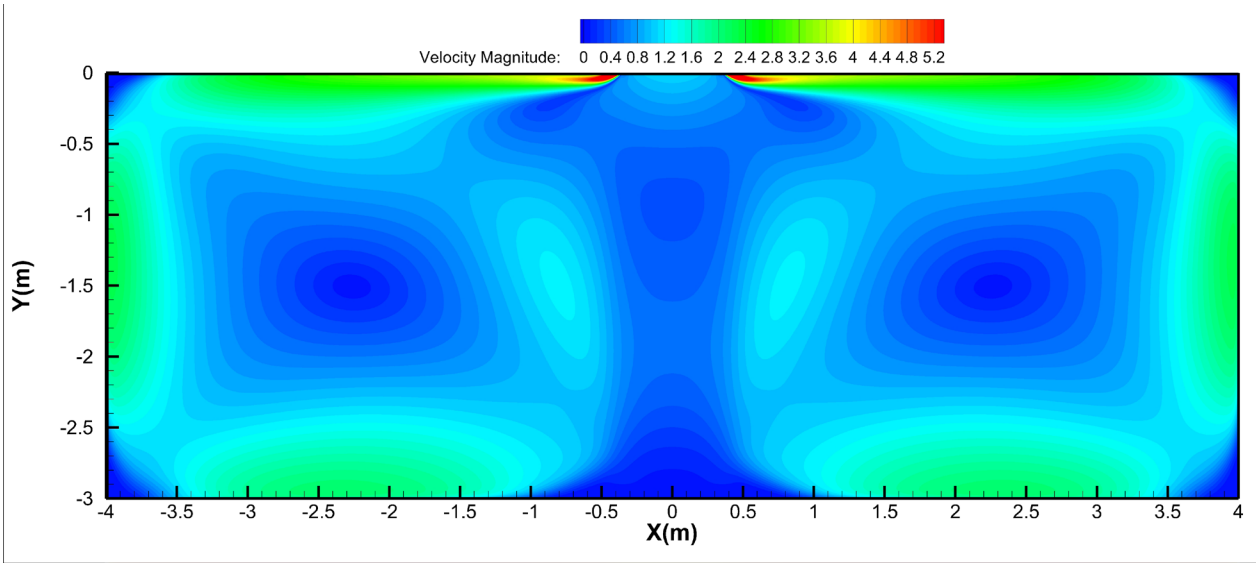

Heating temperature distributions

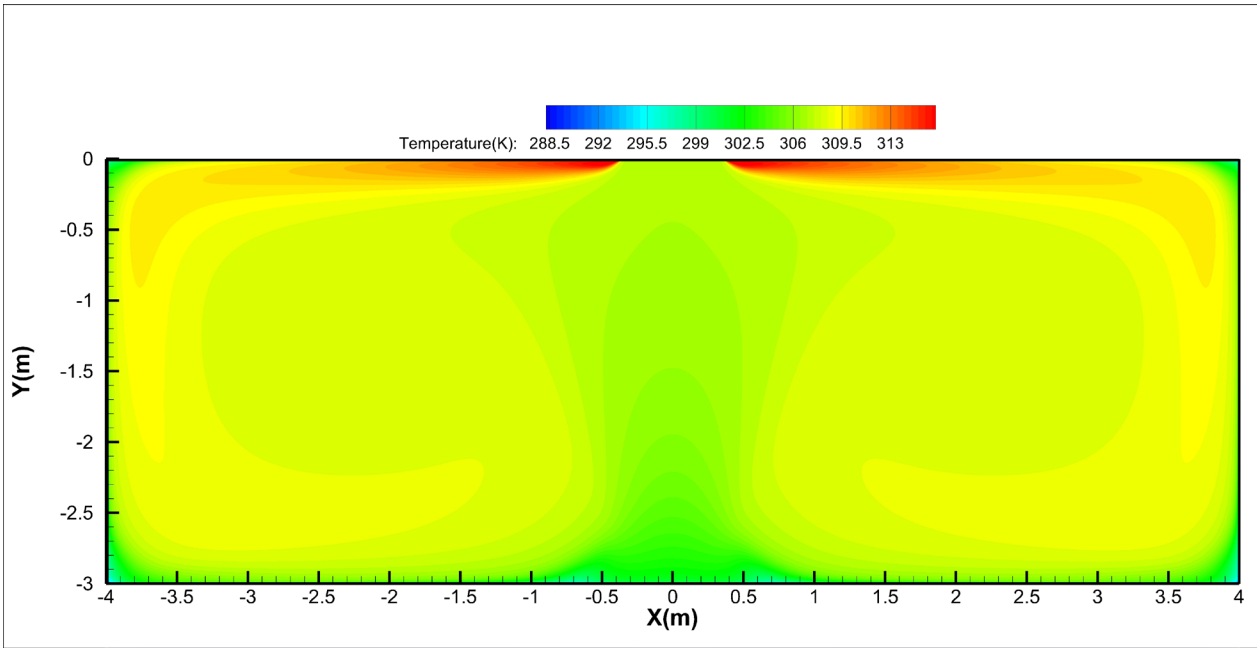

55K

Discharge Angle 60°

Cooling airflow velocity distributions

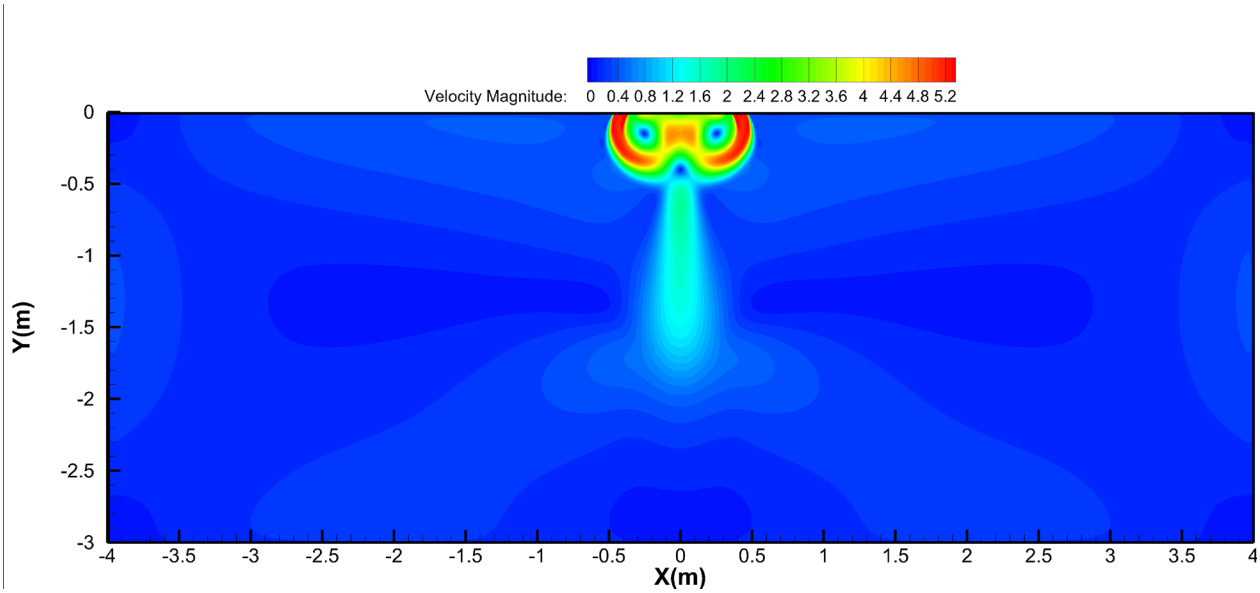

Cooling temperature distributions

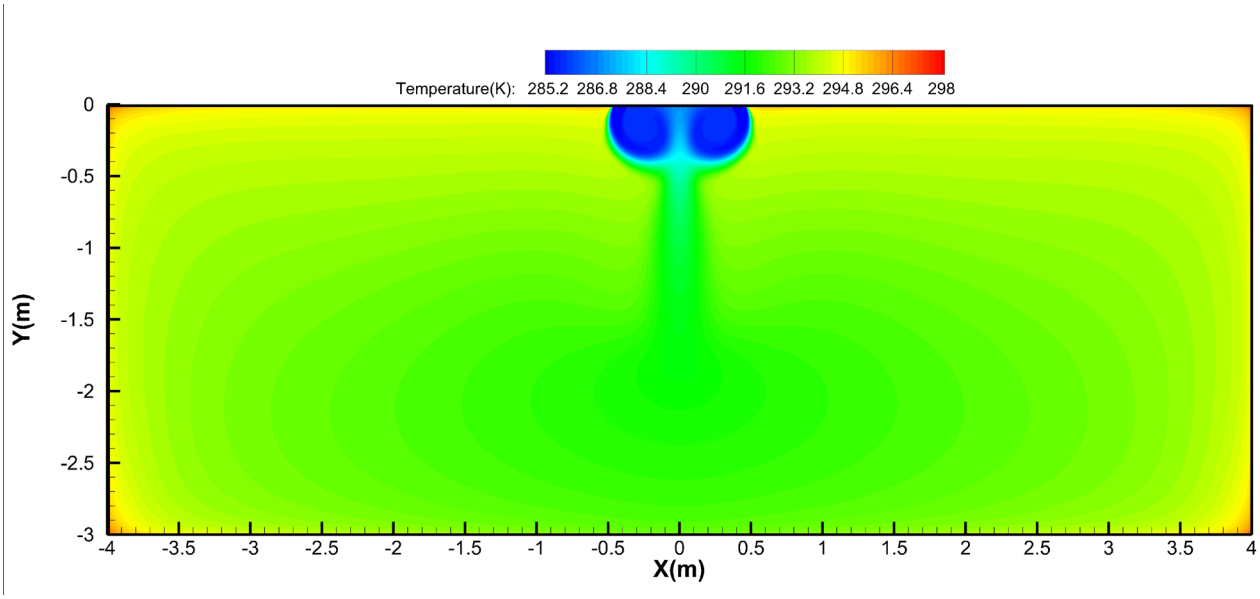

55K

Discharge Angle 60°

Heating airflow velocity distributions

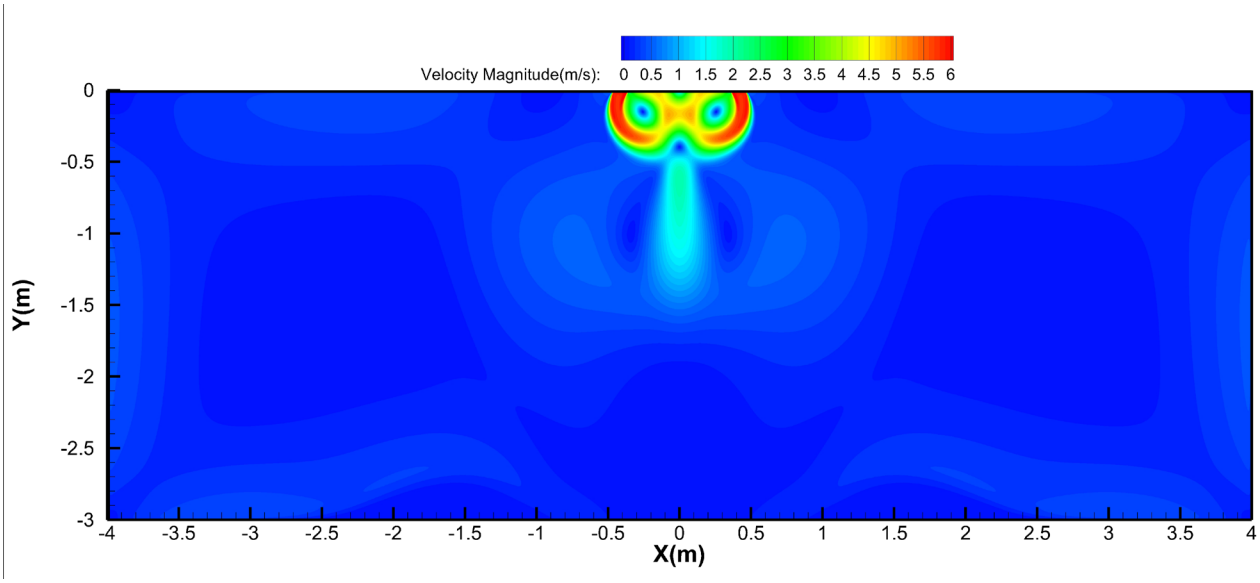

Heating temperature distributions

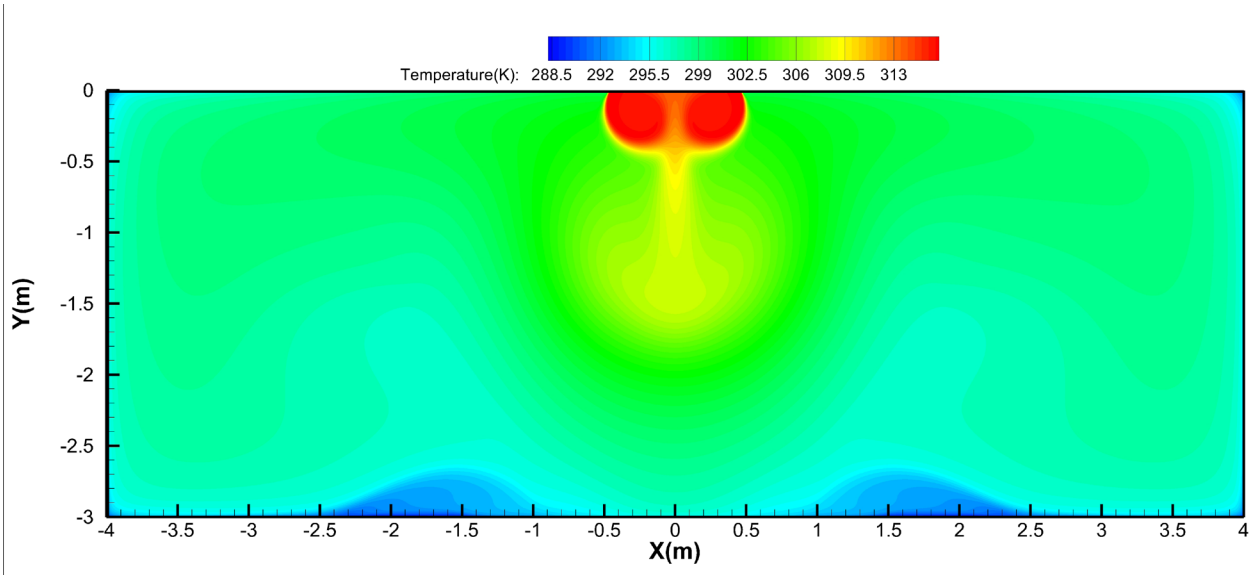

7. Capacity Tables

7.1 Cooling

24k																		
INDOOR AIRFLOW (CMH)	OUTDOOR DB(℃)	ID WB (℃)	16.0				18.0				19.0				22.0			
		ID DB (℃)	23.0	25.0	27.0	29.0	23.0	25.0	27.0	29.0	23.0	25.0	27.0	29.0	23.0	25.0	27.0	29.0
992	-15	TC	7.35	7.34	7.40	7.46	7.73	7.88	7.88	7.97	7.93	7.93	7.93	7.93	8.40	8.40	8.40	8.40
		S/T	0.71	0.80	0.90	0.97	0.57	0.65	0.74	0.83	0.50	0.58	0.67	0.75	0.35	0.42	0.50	0.58
		PI	1.54	1.54	1.54	1.54	1.53	1.53	1.53	1.53	1.54	1.54	1.54	1.54	1.53	1.53	1.53	1.53
	-10	TC	7.31	7.30	7.36	7.42	7.69	7.84	7.84	7.93	7.89	7.89	7.89	7.89	8.37	8.37	8.37	8.37
		S/T	0.72	0.81	0.90	0.97	0.57	0.66	0.75	0.83	0.50	0.58	0.67	0.76	0.35	0.43	0.50	0.58
		PI	1.53	1.53	1.53	1.53	1.53	1.53	1.53	1.53	1.53	1.53	1.53	1.53	1.53	1.53	1.53	1.53
	-5	TC	7.26	7.26	7.32	7.38	7.66	7.81	7.81	7.90	7.86	7.86	7.86	7.86	8.35	8.35	8.35	8.35
		S/T	0.72	0.81	0.91	0.98	0.58	0.66	0.75	0.84	0.51	0.59	0.67	0.76	0.35	0.43	0.51	0.59
		PI	1.53	1.53	1.53	1.53	1.53	1.53	1.53	1.53	1.53	1.53	1.53	1.53	1.53	1.53	1.53	1.53
	0	TC	7.23	7.22	7.28	7.34	7.63	7.78	7.78	7.87	7.84	7.84	7.84	7.84	8.34	8.34	8.34	8.34
		S/T	0.73	0.81	0.91	0.98	0.58	0.66	0.75	0.84	0.51	0.59	0.68	0.76	0.35	0.43	0.51	0.59
		PI	1.54	1.54	1.54	1.54	1.53	1.53	1.53	1.53	1.54	1.54	1.54	1.54	1.54	1.54	1.54	1.54
	5	TC	7.19	7.18	7.24	7.30	7.60	7.75	7.75	7.84	7.82	7.82	7.82	7.82	8.34	8.34	8.34	8.34
		S/T	0.73	0.82	0.92	0.99	0.58	0.67	0.76	0.85	0.51	0.59	0.68	0.77	0.35	0.43	0.51	0.59
		PI	1.55	1.55	1.55	1.55	1.55	1.55	1.55	1.55	1.55	1.55	1.55	1.55	1.55	1.55	1.55	1.55
	10	TC	7.15	7.14	7.20	7.26	7.56	7.71	7.71	7.80	7.79	7.79	7.79	7.79	8.31	8.31	8.31	8.31
		S/T	0.73	0.82	0.92	0.99	0.58	0.67	0.76	0.85	0.51	0.59	0.68	0.77	0.36	0.44	0.51	0.59
		PI	1.58	1.58	1.58	1.58	1.57	1.57	1.57	1.57	1.57	1.57	1.57	1.57	1.57	1.57	1.57	1.57
	15	TC	7.09	7.08	7.14	7.20	7.51	7.66	7.66	7.75	7.74	7.74	7.74	7.74	8.28	8.28	8.28	8.28
		S/T	0.74	0.83	0.93	1.00	0.59	0.67	0.77	0.86	0.52	0.60	0.69	0.78	0.36	0.44	0.52	0.60
		PI	1.61	1.62	1.62	1.62	1.61	1.61	1.61	1.61	1.61	1.61	1.61	1.61	1.61	1.61	1.61	1.61
	20	TC	7.01	7.00	7.06	7.12	7.43	7.43	7.43	7.43	7.66	7.66	7.66	7.66	8.21	8.21	8.21	8.21
		S/T	0.74	0.83	0.93	1.00	0.59	0.68	0.77	0.86	0.52	0.60	0.69	0.78	0.36	0.44	0.52	0.60
		PI	1.67	1.67	1.67	1.67	1.66	1.66	1.66	1.66	1.66	1.66	1.66	1.66	1.65	1.65	1.65	1.65
	25	TC	6.69	6.69	6.74	6.80	7.09	7.09	7.09	7.09	7.32	7.32	7.32	7.32	7.86	7.86	7.86	7.86
		S/T	0.75	0.85	0.94	1.00	0.59	0.69	0.78	0.87	0.52	0.61	0.70	0.79	0.35	0.44	0.52	0.61
		PI	1.84	1.84	1.84	1.84	1.84	1.84	1.84	1.84	1.84	1.84	1.84	1.84	1.84	1.84	1.84	1.84
	30	TC	6.37	6.37	6.43	6.49	6.77	6.77	6.77	6.83	6.97	6.97	6.97	6.97	7.52	7.52	7.52	7.52
		S/T	0.76	0.86	0.97	1.00	0.60	0.70	0.79	0.89	0.52	0.62	0.71	0.81	0.35	0.44	0.53	0.61
		PI	2.02	2.02	2.02	2.02	2.03	2.03	2.03	2.03	2.03	2.03	2.03	2.03	2.04	2.04	2.04	2.04
	35	TC	6.06	6.06	6.11	6.17	6.43	6.43	6.43	6.49	6.63	6.63	6.74	6.63	7.17	7.17	7.17	7.17
		S/T	0.77	0.88	0.99	1.00	0.60	0.71	0.81	0.91	0.53	0.63	0.72	0.83	0.35	0.44	0.53	0.62
		PI	2.20	2.20	2.20	2.20	2.21	2.21	2.21	2.21	2.22	2.22	2.22	2.22	2.23	2.23	2.23	2.23
	40	TC	5.66	5.68	5.74	5.80	6.01	6.01	6.01	6.07	6.21	6.21	6.28	6.21	6.72	6.72	6.72	6.72
		S/T	0.80	0.92	1.00	1.00	0.62	0.73	0.85	0.95	0.53	0.64	0.75	0.86	0.34	0.44	0.54	0.64
		PI	2.43	2.43	2.43	2.43	2.44	2.44	2.44	2.44	2.45	2.45	2.45	2.45	2.47	2.47	2.47	2.47
	46	TC	5.24	5.29	5.35	5.41	5.58	5.58	5.58	5.64	5.78	5.78	5.78	5.78	6.23	6.23	6.23	6.23
		S/T	0.81	0.94	1.00	1.00	0.63	0.74	0.86	0.97	0.54	0.65	0.77	0.88	0.34	0.44	0.55	0.66
		PI	2.71	2.71	2.71	2.71	2.72	2.72	2.72	2.72	2.73	2.73	2.73	2.73	2.75	2.75	2.75	2.75
	50	TC	4.90	4.95	5.01	5.07	5.24	5.24	5.29	5.35	5.44	5.44	5.44	5.49	5.89	5.89	5.89	5.89
		S/T	0.84	0.97	1.00	1.00	0.64	0.76	0.88	1.00	0.54	0.66	0.79	0.90	0.33	0.45	0.56	0.67
		PI	2.94	2.94	2.94	2.94	2.95	2.95	2.95	2.95	2.96	2.96	2.96	2.96	2.98	2.98	2.98	2.98

1118	-15	TC	7.50	7.50	7.56	7.65	7.88	7.88	7.88	7.97	8.09	8.09	8.09	8.09	8.58	8.58	8.58	8.58
		S/T	0.73	0.84	0.98	1.00	0.58	0.68	0.77	0.86	0.50	0.60	0.69	0.78	0.34	0.42	0.51	0.60
		PI	1.58	1.58	1.58	1.58	1.57	1.57	1.57	1.57	1.57	1.57	1.57	1.57	1.57	1.57	1.57	1.57
	-10	TC	7.45	7.45	7.51	7.60	7.84	7.84	7.84	7.93	8.05	8.05	8.05	8.05	8.55	8.55	8.55	8.55
		S/T	0.74	0.84	0.99	1.00	0.58	0.68	0.78	0.86	0.50	0.60	0.69	0.79	0.34	0.43	0.51	0.60
		PI	1.57	1.57	1.57	1.57	1.57	1.57	1.57	1.57	1.57	1.57	1.57	1.57	1.57	1.57	1.57	1.57
	-5	TC	7.41	7.41	7.47	7.56	7.81	7.81	7.81	7.90	8.02	8.02	8.02	8.02	8.53	8.53	8.53	8.53
		S/T	0.74	0.85	0.99	1.00	0.59	0.68	0.78	0.87	0.51	0.60	0.69	0.79	0.34	0.43	0.52	0.60
		PI	1.57	1.57	1.57	1.57	1.57	1.57	1.57	1.57	1.57	1.57	1.57	1.57	1.57	1.57	1.57	1.57
	0	TC	7.37	7.37	7.43	7.52	7.78	7.78	7.78	7.87	7.99	7.99	7.99	7.99	8.52	8.52	8.52	8.52
		S/T	0.74	0.85	1.00	1.00	0.59	0.69	0.78	0.87	0.51	0.61	0.70	0.79	0.34	0.43	0.52	0.61
		PI	1.57	1.57	1.57	1.57	1.57	1.57	1.57	1.57	1.58	1.58	1.58	1.58	1.58	1.58	1.58	1.58
	5	TC	7.33	7.33	7.39	7.48	7.75	7.75	7.75	7.84	7.97	7.97	7.97	7.97	8.51	8.51	8.51	8.51
		S/T	0.75	0.86	1.00	1.00	0.59	0.69	0.79	0.88	0.51	0.61	0.70	0.80	0.34	0.43	0.52	0.61
		PI	1.59	1.59	1.59	1.59	1.59	1.59	1.59	1.59	1.59	1.59	1.59	1.59	1.59	1.59	1.59	1.59
	10	TC	7.29	7.29	7.35	7.44	7.71	7.71	7.71	7.80	7.93	7.93	7.93	7.93	8.49	8.49	8.49	8.49
		S/T	0.75	0.86	1.00	1.00	0.59	0.69	0.79	0.88	0.51	0.61	0.70	0.80	0.35	0.44	0.52	0.61
		PI	1.62	1.62	1.62	1.62	1.61	1.61	1.61	1.61	1.61	1.61	1.61	1.61	1.61	1.61	1.61	1.61
	15	TC	7.23	7.23	7.29	7.38	7.66	7.66	7.66	7.75	7.89	7.89	7.89	7.89	8.46	8.46	8.46	8.46
		S/T	0.76	0.87	0.97	1.00	0.60	0.70	0.80	0.89	0.52	0.62	0.71	0.81	0.35	0.44	0.53	0.62
		PI	1.66	1.66	1.66	1.66	1.65	1.65	1.65	1.65	1.65	1.65	1.65	1.65	1.64	1.64	1.64	1.64
	20	TC	7.15	7.15	7.21	7.29	7.58	7.58	7.58	7.67	7.81	7.81	7.81	7.81	8.38	8.38	8.38	8.38
		S/T	0.76	0.87	0.97	1.00	0.60	0.70	0.80	0.89	0.52	0.62	0.71	0.81	0.35	0.44	0.53	0.62
		PI	1.71	1.71	1.71	1.71	1.70	1.70	1.70	1.70	1.70	1.70	1.70	1.70	1.69	1.69	1.69	1.69
	25	TC	6.83	6.83	6.89	6.95	7.26	7.26	7.26	7.35	7.46	7.46	7.46	7.46	8.04	8.04	8.04	8.04
		S/T	0.77	0.88	0.99	1.00	0.60	0.71	0.81	0.91	0.53	0.63	0.73	0.83	0.35	0.44	0.53	0.63
		PI	1.88	1.88	1.88	1.88	1.88	1.88	1.88	1.88	1.88	1.88	1.88	1.88	1.88	1.88	1.88	1.88
	30	TC	6.52	6.57	6.63	6.69	6.92	6.92	6.92	6.98	7.12	7.12	7.12	7.12	7.69	7.69	7.69	7.69
		S/T	0.79	0.90	1.00	1.00	0.61	0.72	0.83	0.93	0.53	0.64	0.74	0.85	0.34	0.44	0.54	0.64
		PI	2.07	2.07	2.07	2.07	2.07	2.07	2.07	2.07	2.07	2.07	2.07	2.07	2.08	2.08	2.08	2.08
	35	TC	6.17	6.23	6.29	6.34	6.57	6.57	6.57	6.63	6.78	6.78	6.89	6.78	7.32	7.32	7.32	7.32
		S/T	0.80	0.92	1.00	1.00	0.62	0.73	0.85	0.96	0.53	0.64	0.75	0.87	0.34	0.44	0.54	0.65
		PI	2.25	2.25	2.25	2.25	2.26	2.26	2.26	2.26	2.27	2.27	2.27	2.27	2.27	2.27	2.27	2.27
	40	TC	5.83	5.89	5.95	6.00	6.21	6.21	6.23	6.29	6.41	6.41	6.47	6.43	6.93	6.93	6.93	6.93
		S/T	0.83	0.96	1.00	1.00	0.64	0.76	0.88	1.00	0.54	0.66	0.79	0.90	0.33	0.45	0.56	0.67
		PI	2.49	2.49	2.49	2.49	2.50	2.50	2.50	2.50	2.51	2.51	2.51	2.51	2.52	2.52	2.52	2.52
	46	TC	5.41	5.46	5.52	5.58	5.75	5.75	5.81	5.87	5.95	5.95	5.95	6.01	6.44	6.44	6.44	6.44
		S/T	0.85	0.98	1.00	1.00	0.64	0.77	0.90	1.00	0.55	0.67	0.80	0.92	0.33	0.45	0.56	0.68
		PI	2.77	2.77	2.77	2.77	2.78	2.78	2.78	2.78	2.79	2.79	2.79	2.79	2.81	2.81	2.81	2.81
	50	TC	5.06	5.12	5.18	5.23	5.41	5.41	5.46	5.52	5.61	5.61	5.61	5.67	6.07	6.07	6.07	6.07
		S/T	0.87	1.00	1.00	1.00	0.66	0.80	0.93	1.00	0.56	0.69	0.82	0.95	0.33	0.45	0.58	0.91
		PI	3.00	3.00	3.00	3.00	3.02	3.02	3.02	3.02	3.02	3.02	3.02	3.02	3.05	3.05	3.05	3.05
1247	-15	TC	7.68	7.77	7.86	7.95	8.06	8.06	8.06	8.15	8.26	8.26	8.26	8.26	8.79	8.79	8.79	8.79
		S/T	0.75	0.86	1.00	1.00	0.59	0.70	0.80	0.98	0.51	0.61	0.71	0.81	0.33	0.42	0.52	0.61
		PI	1.61	1.61	1.61	1.61	1.61	1.61	1.61	1.61	1.60	1.60	1.60	1.60	1.60	1.60	1.60	1.60
	-10	TC	7.63	7.72	7.81	7.90	8.02	8.02	8.02	8.10	8.22	8.22	8.22	8.22	8.76	8.76	8.76	8.76
		S/T	0.76	0.86	1.00	1.00	0.59	0.70	0.81	0.98	0.51	0.61	0.72	0.82	0.33	0.43	0.52	0.61
		PI	1.60	1.60	1.60	1.60	1.60	1.60	1.60	1.60	1.60	1.60	1.60	1.60	1.60	1.60	1.60	1.60
	-5	TC	7.59	7.68	7.77	7.85	7.99	7.99	7.99	8.07	8.19	8.19	8.19	8.19	8.73	8.73	8.73	8.73
		S/T	0.76	0.87	1.00	1.00	0.59	0.70	0.81	0.99	0.52	0.61	0.72	0.82	0.33	0.43	0.53	0.61
		PI	1.60	1.60	1.60	1.60	1.60	1.60	1.60	1.60	1.60	1.60	1.60	1.60	1.60	1.60	1.60	1.60
	0	TC	7.55	7.64	7.73	7.82	7.96	7.96	7.96	8.04	8.17	8.17	8.17	8.17	8.73	8.73	8.73	8.73
		S/T	0.76	0.87	1.00	1.00	0.60	0.71	0.81	0.99	0.52	0.62	0.73	0.82	0.33	0.43	0.53	0.62
		PI	1.60	1.60	1.60	1.60	1.61	1.61	1.61	1.61	1.60	1.60	1.60	1.60	1.61	1.61	1.61	1.61
	5	TC	7.51	7.60	7.69	7.78	7.93	7.93	7.93	8.01	8.14	8.14	8.14	8.14	8.72	8.72	8.72	8.72
		S/T	0.77	0.88	1.00	1.00	0.60	0.71	0.82	1.00	0.52	0.62	0.73	0.83	0.33	0.43	0.53	0.62
		PI	1.62	1.62	1.62	1.62	1.62	1.62	1.62	1.62	1.62	1.62	1.62	1.62	1.62	1.62	1.62	1.62
	10	TC	7.47	7.55	7.64	7.73	7.89	7.89	7.89	7.98	8.11	8.11	8.11	8.11	8.70	8.70	8.70	8.70
		S/T	0.77	0.88	1.00	1.00	0.60	0.71	0.82	1.00	0.52	0.62	0.73	0.83	0.34	0.44	0.53	0.62
		PI	1.64	1.64	1.64	1.64	1.65	1.65	1.65	1.65	1.64	1.64	1.64	1.64	1.64	1.64	1.64	1.64
	15	TC	7.40	7.49	7.58	7.67	7.83	7.83	7.83	7.92	8.06	8.06	8.06	8.06	8.66	8.66	8.66	8.66
		S/T	0.78	0.89	1.00	1.00	0.61	0.72	0.83	0.93	0.53	0.63	0.74	0.84	0.34	0.44	0.54	0.63
		PI	1.68	1.68	1.68	1.68	1.69	1.69	1.69	1.69	1.68	1.68	1.68	1.68	1.67	1.67	1.67	1.67
	20	TC	7.32	7.41	7.49	7.58	7.75	7.75	7.75	7.84	7.98	7.98	7.98	7.98	8.58	8.58	8.58	8.58
		S/T	0.78	0.89	1.00	1.00	0.61	0.72	0.83	0.93	0.53	0.63	0.74	0.84	0.34	0.44	0.54	0.63
		PI	1.74	1.74	1.74	1.74	1.74	1.74	1.74	1.74	1.73	1.73	1.73	1.73	1.72	1.72	1.72	1.72
	25	TC	6.98	7.03	7.09	7.15	7.41	7.41	7.41	7.49	7.64	7.64	7.64	7.64	8.21	8.21	8.21	8.21
		S/T	0.80	0.92	1.00	1.00	0.62	0.73	0.84	0.95	0.53	0.64	0.75	0.86	0.34	0.44	0.54	0.65
		PI	1.93	1.93	1.93	1.93	1.92	1.92	1.92	1.92	1.92	1.92	1.92	1.92	1.93	1.93	1.93	1.93
	30	TC	6.63	6.69	6.75	6.80	7.06	7.06	7.06	7.12	7.29	7.29	7.29	7.29	7.84	7.84	7.84	7.84
		S/T	0.81	0.94	1.00	1.00	0.63	0.74	0.86	0.98	0.54	0.65	0.77	0.88	0.34	0.44	0.55	0.66
		PI	2.10	2.10	2.10	2.10	2.11	2.11	2.11	2.11	2.11	2.11	2.11	2.11	2.12	2.12	2.12	2.12
	35	TC	6.32	6.37	6.43	6.49	6.72	6.72	6.72	6.78	6.92	6.92	**7.03**	7.09	7.46	7.46	7.46	7.46
		S/T	0.83	0.96	1.00	1.00	0.63	0.76	0.88	1.00	0.54	0.66	**0.78**	0.89	0.33	0.45	0.56	0.67
		PI	2.30	2.30	2.30	2.30	2.31	2.31	2.31	2.31	2.32	2.32	**2.32**	2.32	2.33	2.33	2.33	2.33
	40	TC	5.96	6.02	6.08	6.13	6.35	6.35	6.38	6.43	6.54	6.54	6.60	6.66	7.07	7.07	7.07	7.07
		S/T	0.87	1.00	1.00	1.00	0.65	0.79	0.92	1.00	0.55	0.69	0.82	0.95	0.33	0.45	0.57	0.90
		PI	2.54	2.54	2.54	2.54	2.55	2.55	2.55	2.55	2.56	2.56	2.56	2.56	2.58	2.58	2.58	2.58
	46	TC	5.52	5.58	5.64	5.69	5.90	5.90	5.95	6.01	6.07	6.07	6.07	6.13	6.59	6.59	6.59	6.59
		S/T	0.88	1.00	1.00	1.00	0.66	0.80	0.94	1.00	0.56	0.70	0.84	0.97	0.33	0.45	0.58	0.92
		PI	2.83	2.83	2.83	2.83	2.84	2.84	2.84	2.84	2.85	2.85	2.85	2.85	2.87	2.87	2.87	2.87
	50	TC	5.18	5.23	5.29	5.35	5.52	5.52	5.58	5.64	5.72	5.72	5.72	5.78	6.18	6.18	6.18	6.18
		S/T	0.91	1.00	1.00	1.00	0.68	0.83	0.97	1.00	0.57	0.71	0.86	1.00	0.32	0.46	0.59	0.97
		PI	3.07	3.07	3.07	3.07	3.08	3.08	3.08	3.08	3.09	3.09	3.09	3.09	3.10	3.10	3.10	3.10

TC:Total Cooling Capacity (kW)

S/T:Sensible Cooling Capacity Ratio

PI:Power Input(kW)

Note: The table shows the case where the operation frequency of a compressor is fixed.

30k																		
INDOOR AIRFLOW (CMH)	OUTDOOR DB(℃)	ID WB (℃)	16.0				18.0				19.0				22.0			
		ID DB (℃)	23.0	25.0	27.0	29.0	23.0	25.0	27.0	29.0	23.0	25.0	27.0	29.0	23.0	25.0	27.0	29.0
1300	-15	TC	9.20	9.22	9.31	9.40	9.68	9.89	9.89	9.98	9.90	9.90	9.90	9.90	10.52	10.52	10.52	10.52
		S/T	0.72	0.82	0.91	0.97	0.57	0.66	0.75	0.84	0.50	0.59	0.68	0.76	0.34	0.42	0.50	0.59
		PI	1.84	1.84	1.84	1.84	1.83	1.83	1.83	1.83	1.83	1.83	1.83	1.83	1.83	1.83	1.83	1.83
	-10	TC	9.15	9.16	9.25	9.34	9.62	9.83	9.83	9.92	9.85	9.85	9.85	9.85	10.49	10.49	10.49	10.49
		S/T	0.73	0.82	0.91	0.97	0.57	0.67	0.76	0.84	0.50	0.59	0.68	0.77	0.34	0.43	0.50	0.59
		PI	1.83	1.83	1.83	1.83	1.82	1.82	1.82	1.82	1.83	1.83	1.83	1.83	1.83	1.83	1.83	1.83
	-5	TC	9.09	9.11	9.20	9.29	9.59	9.80	9.80	9.89	9.82	9.82	9.82	9.82	10.46	10.46	10.46	10.46
		S/T	0.73	0.83	0.92	0.98	0.58	0.67	0.76	0.85	0.51	0.59	0.68	0.77	0.34	0.43	0.51	0.59
		PI	1.83	1.82	1.82	1.83	1.82	1.82	1.82	1.82	1.83	1.83	1.83	1.83	1.83	1.83	1.83	1.83
	0	TC	9.05	9.06	9.15	9.24	9.55	9.76	9.76	9.85	9.79	9.79	9.79	9.79	10.45	10.45	10.45	10.45
		S/T	0.74	0.83	0.92	0.98	0.58	0.67	0.76	0.85	0.51	0.60	0.69	0.77	0.34	0.43	0.51	0.60
		PI	1.83	1.83	1.83	1.83	1.83	1.83	1.83	1.83	1.83	1.83	1.83	1.83	1.84	1.84	1.84	1.84
	5	TC	9.00	9.02	9.11	9.19	9.51	9.72	9.72	9.81	9.76	9.76	9.76	9.76	10.44	10.44	10.44	10.44
		S/T	0.74	0.84	0.93	0.99	0.58	0.68	0.77	0.86	0.51	0.60	0.69	0.78	0.34	0.43	0.51	0.60
		PI	1.85	1.85	1.85	1.85	1.85	1.85	1.85	1.85	1.85	1.85	1.85	1.85	1.85	1.85	1.85	1.85
	10	TC	8.95	8.96	9.05	9.14	9.47	9.68	9.68	9.77	9.72	9.72	9.72	9.72	10.42	10.42	10.42	10.42
		S/T	0.74	0.84	0.93	0.99	0.58	0.68	0.77	0.86	0.51	0.60	0.69	0.78	0.35	0.44	0.51	0.60
		PI	1.88	1.88	1.88	1.88	1.87	1.87	1.87	1.87	1.88	1.88	1.88	1.88	1.88	1.88	1.88	1.88
	15	TC	8.87	8.89	8.98	9.06	9.41	9.61	9.61	9.70	9.66	9.66	9.66	9.66	10.37	10.37	10.37	10.37
		S/T	0.75	0.85	0.94	1.00	0.59	0.68	0.78	0.87	0.52	0.61	0.70	0.79	0.35	0.44	0.52	0.61
		PI	1.93	1.93	1.93	1.93	1.92	1.92	1.92	1.92	1.92	1.92	1.92	1.92	1.92	1.92	1.92	1.92
	20	TC	8.77	8.79	8.88	8.96	9.31	9.31	9.31	9.31	9.56	9.56	9.56	9.56	10.28	10.28	10.28	10.28
		S/T	0.75	0.85	0.94	1.00	0.59	0.69	0.78	0.87	0.52	0.61	0.70	0.79	0.35	0.44	0.52	0.61
		PI	2.00	1.99	1.99	2.00	1.98	1.98	1.98	1.98	1.98	1.98	1.98	1.98	1.97	1.97	1.97	1.97
	25	TC	8.36	8.36	8.44	8.53	8.90	8.90	8.90	8.99	9.16	9.16	9.16	9.16	9.85	9.85	9.85	9.85
		S/T	0.76	0.86	0.96	1.00	0.60	0.70	0.79	0.89	0.52	0.62	0.71	0.81	0.35	0.44	0.53	0.61
		PI	2.20	2.20	2.20	2.20	2.20	2.20	2.20	2.20	2.20	2.20	2.20	2.20	2.20	2.20	2.20	2.20
	30	TC	7.98	7.98	8.07	8.16	8.47	8.47	8.47	8.56	8.73	8.73	8.73	8.73	9.42	9.42	9.42	9.42
		S/T	0.77	0.88	0.99	1.00	0.60	0.71	0.81	0.91	0.53	0.63	0.73	0.83	0.35	0.44	0.53	0.62
		PI	2.41	2.41	2.41	2.41	2.42	2.42	2.42	2.42	2.42	2.42	2.42	2.42	2.43	2.43	2.43	2.43
	35	TC	7.58	7.67	7.75	7.84	8.07	8.07	8.07	8.16	8.33	8.33	8.44	8.33	8.96	8.96	8.96	8.96
		S/T	0.79	0.90	1.00	1.00	0.61	0.72	0.83	0.93	0.53	0.63	0.73	0.84	0.34	0.44	0.54	0.63
		PI	2.63	2.63	2.63	2.63	2.64	2.64	2.64	2.64	2.65	2.65	2.65	2.65	2.66	2.66	2.66	2.66
	40	TC	7.12	7.19	7.26	7.34	7.59	7.59	7.59	7.66	7.82	7.82	7.89	7.86	8.44	8.44	8.44	8.44
		S/T	0.82	0.94	1.00	1.00	0.63	0.74	0.86	0.98	0.54	0.65	0.77	0.88	0.34	0.44	0.55	0.66
		PI	2.90	2.90	2.90	2.90	2.91	2.91	2.91	2.91	2.92	2.92	2.92	2.92	2.93	2.93	2.93	2.93
	46	TC	6.59	6.64	6.70	6.76	7.04	7.04	7.04	7.10	7.25	7.25	7.25	7.33	7.85	7.85	7.85	7.85
		S/T	0.83	0.96	1.00	1.00	0.63	0.76	0.88	1.00	0.54	0.66	0.78	0.90	0.33	0.45	0.56	0.67
		PI	3.22	3.22	3.22	3.22	3.24	3.24	3.24	3.24	3.24	3.24	3.24	3.24	3.27	3.27	3.27	3.27
	50	TC	6.19	6.24	6.30	6.36	6.62	6.62	6.67	6.73	6.82	6.82	6.82	6.87	7.39	7.39	7.39	7.39
		S/T	0.85	0.99	1.00	1.00	0.64	0.78	0.90	1.00	0.55	0.68	0.80	0.93	0.33	0.45	0.57	0.68
		PI	3.49	3.49	3.49	3.49	3.51	3.51	3.51	3.51	3.52	3.52	3.52	3.52	3.55	3.55	3.55	3.55
1530	-15	TC	9.40	9.49	9.58	9.67	9.89	9.89	9.89	9.98	10.12	10.12	10.12	10.12	10.76	10.76	10.76	10.76
		S/T	0.76	0.87	0.98	1.00	0.59	0.70	0.80	0.90	0.51	0.61	0.71	0.82	0.33	0.42	0.52	0.62
		PI	1.87	1.87	1.87	1.87	1.86	1.86	1.86	1.86	1.86	1.86	1.86	1.86	1.86	1.86	1.86	1.86
	-10	TC	9.35	9.44	9.53	9.62	9.83	9.83	9.83	9.92	10.06	10.06	10.06	10.06	10.73	10.73	10.73	10.73
		S/T	0.77	0.87	0.99	1.00	0.59	0.70	0.81	0.90	0.51	0.61	0.72	0.82	0.33	0.43	0.52	0.62
		PI	1.86	1.86	1.86	1.86	1.86	1.86	1.86	1.86	1.86	1.86	1.86	1.86	1.86	1.86	1.86	1.86
	-5	TC	9.29	9.38	9.47	9.56	9.80	9.80	9.80	9.89	10.03	10.03	10.03	10.03	10.70	10.70	10.70	10.70
		S/T	0.77	0.88	0.99	1.00	0.59	0.70	0.81	0.91	0.52	0.61	0.72	0.83	0.33	0.43	0.53	0.62
		PI	1.85	1.85	1.85	1.85	1.85	1.85	1.85	1.85	1.86	1.86	1.86	1.86	1.86	1.86	1.86	1.86
	0	TC	9.24	9.33	9.42	9.51	9.76	9.76	9.76	9.85	10.00	10.00	10.00	10.00	10.69	10.69	10.69	10.69
		S/T	0.77	0.88	1.00	1.00	0.60	0.71	0.81	0.91	0.52	0.62	0.73	0.83	0.33	0.43	0.53	0.63
		PI	1.86	1.86	1.86	1.86	1.86	1.86	1.86	1.86	1.87	1.87	1.87	1.87	1.87	1.87	1.87	1.87
	5	TC	9.20	9.29	9.37	9.46	9.72	9.72	9.72	9.81	9.97	9.97	9.97	9.97	10.68	10.68	10.68	10.68
		S/T	0.78	0.89	1.00	1.00	0.60	0.71	0.82	0.92	0.52	0.62	0.73	0.84	0.33	0.43	0.53	0.63
		PI	1.88	1.88	1.88	1.88	1.88	1.88	1.88	1.88	1.88	1.88	1.88	1.88	1.88	1.88	1.88	1.88
	10	TC	9.14	9.23	9.32	9.41	9.68	9.68	9.68	9.77	9.93	9.93	9.93	9.93	10.65	10.65	10.65	10.65
		S/T	0.78	0.89	1.00	1.00	0.60	0.71	0.82	0.92	0.52	0.62	0.73	0.84	0.34	0.44	0.53	0.63
		PI	1.91	1.91	1.91	1.91	1.90	1.90	1.90	1.90	1.91	1.91	1.91	1.91	1.91	1.91	1.91	1.91
	15	TC	9.07	9.15	9.24	9.33	9.61	9.61	9.61	9.70	9.87	9.87	9.87	9.87	10.61	10.61	10.61	10.61
		S/T	0.79	0.90	1.00	1.00	0.61	0.72	0.83	0.93	0.53	0.63	0.74	0.85	0.34	0.44	0.54	0.64
		PI	1.96	1.96	1.96	1.96	1.95	1.95	1.95	1.95	1.95	1.95	1.95	1.95	1.95	1.95	1.95	1.95
	20	TC	8.96	9.05	9.14	9.22	9.51	9.51	9.51	9.60	9.77	9.77	9.77	9.77	10.52	10.52	10.52	10.52
		S/T	0.79	0.90	1.00	1.00	0.61	0.72	0.83	0.93	0.53	0.63	0.74	0.85	0.34	0.44	0.54	0.64
		PI	2.03	2.03	2.03	2.03	2.02	2.02	2.02	2.02	2.02	2.02	2.02	2.02	2.01	2.01	2.01	2.01
	25	TC	8.53	8.62	8.71	8.79	9.08	9.08	9.08	9.17	9.34	9.34	9.34	9.34	10.06	10.06	10.06	10.06
		S/T	0.80	0.92	1.00	1.00	0.62	0.73	0.84	0.95	0.53	0.64	0.75	0.86	0.34	0.44	0.54	0.65
		PI	2.23	2.23	2.23	2.23	2.23	2.23	2.23	2.23	2.23	2.23	2.23	2.23	2.23	2.23	2.23	2.23
	30	TC	8.13	8.22	8.30	8.39	8.65	8.65	8.65	8.74	8.91	8.91	8.91	8.91	9.63	9.63	9.63	9.63
		S/T	0.82	0.94	1.00	1.00	0.63	0.74	0.86	0.98	0.54	0.65	0.77	0.88	0.34	0.44	0.55	0.66
		PI	2.45	2.45	2.45	2.45	2.45	2.45	2.45	2.45	2.46	2.46	2.46	2.46	2.47	2.47	2.47	2.47
	35	TC	7.73	7.82	7.90	7.99	8.25	8.25	8.25	8.33	8.48	8.48	8.62	8.71	9.17	9.17	9.17	9.17
		S/T	0.83	0.96	1.00	1.00	0.63	0.76	0.88	1.00	0.54	0.66	0.78	0.89	0.33	0.45	0.56	0.67
		PI	2.67	2.67	2.67	2.67	2.68	2.68	2.68	2.68	2.69	2.69	2.69	2.69	2.69	2.69	2.69	2.69
	40	TC	7.29	7.37	7.44	7.51	7.78	7.78	7.82	7.91	8.01	8.01	8.09	8.18	8.66	8.66	8.66	8.66
		S/T	0.87	1.00	1.00	1.00	0.65	0.79	0.92	1.00	0.55	0.69	0.82	0.95	0.33	0.45	0.57	0.70
		PI	2.95	2.95	2.95	2.95	2.96	2.96	2.96	2.96	2.97	2.97	2.97	2.97	2.98	2.98	2.98	2.98
	46	TC	6.76	6.82	6.87	6.93	7.22	7.22	7.30	7.39	7.45	7.45	7.45	7.53	8.05	8.05	8.05	8.05
		S/T	0.88	1.00	1.00	1.00	0.66	0.80	0.94	1.00	0.56	0.70	0.84	0.97	0.33	0.45	0.58	0.71
		PI	3.28	3.28	3.28	3.28	3.30	3.30	3.30	3.30	3.31	3.31	3.31	3.31	3.33	3.33	3.33	3.33
	50	TC	6.33	6.38	6.44	6.50	6.76	6.76	6.82	6.87	6.99	6.99	6.99	7.05	7.59	7.59	7.59	7.59
		S/T	0.91	1.00	1.00	1.00	0.68	0.83	0.98	1.00	0.57	0.72	0.86	1.00	0.32	0.46	0.59	0.91
		PI	3.56	3.56	3.56	3.56	3.58	3.58	3.58	3.58	3.58	3.58	3.58	3.58	3.61	3.61	3.61	3.61

1700	-15	TC	9.58	9.67	9.76	9.85	10.07	10.07	10.07	10.16	10.32	10.32	10.32	10.32	10.97	10.97	10.97	10.97
		S/T	0.78	0.90	1.00	1.00	0.60	0.71	0.83	0.98	0.52	0.63	0.74	0.85	0.33	0.42	0.53	0.64
		PI	1.90	1.90	1.90	1.90	1.90	1.90	1.90	1.90	1.90	1.90	1.90	1.90	1.89	1.89	1.89	1.89
	-10	TC	9.53	9.62	9.71	9.80	10.01	10.01	10.01	10.10	10.27	10.27	10.27	10.27	10.93	10.93	10.93	10.93
		S/T	0.79	0.90	1.00	1.00	0.60	0.72	0.83	0.98	0.52	0.63	0.75	0.85	0.33	0.43	0.53	0.64
		PI	1.89	1.89	1.89	1.89	1.90	1.90	1.90	1.90	1.89	1.89	1.89	1.89	1.90	1.90	1.90	1.90
	-5	TC	9.47	9.56	9.65	9.74	9.98	9.98	9.98	10.06	10.23	10.23	10.23	10.23	10.90	10.90	10.90	10.90
		S/T	0.79	0.91	1.00	1.00	0.60	0.72	0.84	0.99	0.53	0.63	0.75	0.86	0.33	0.43	0.54	0.64
		PI	1.89	1.89	1.89	1.89	1.90	1.90	1.90	1.90	1.89	1.89	1.89	1.89	1.90	1.90	1.90	1.90
	0	TC	9.42	9.51	9.60	9.69	9.94	9.94	9.94	10.03	10.21	10.21	10.21	10.21	10.89	10.89	10.89	10.89
		S/T	0.79	0.91	1.00	1.00	0.61	0.73	0.84	0.99	0.53	0.64	0.75	0.86	0.33	0.43	0.54	0.65
		PI	1.90	1.90	1.90	1.90	1.90	1.90	1.90	1.90	1.90	1.90	1.90	1.90	1.91	1.91	1.91	1.91
	5	TC	9.37	9.46	9.55	9.64	9.90	9.90	9.90	9.99	10.17	10.17	10.17	10.17	10.88	10.88	10.88	10.88
		S/T	0.80	0.92	1.00	1.00	0.61	0.73	0.85	1.00	0.53	0.64	0.76	0.87	0.33	0.43	0.54	0.65
		PI	1.92	1.92	1.92	1.92	1.92	1.92	1.92	1.92	1.92	1.92	1.92	1.92	1.92	1.92	1.92	1.92
	10	TC	9.32	9.41	9.49	9.58	9.85	9.85	9.85	9.94	10.13	10.13	10.13	10.13	10.86	10.86	10.86	10.86
		S/T	0.80	0.92	1.00	1.00	0.61	0.73	0.85	1.00	0.53	0.64	0.76	0.87	0.34	0.44	0.54	0.65
		PI	1.95	1.95	1.95	1.95	1.95	1.95	1.95	1.95	1.95	1.95	1.95	1.95	1.94	1.94	1.94	1.94
	15	TC	9.24	9.33	9.42	9.50	9.79	9.79	9.79	9.87	10.07	10.07	10.07	10.07	10.81	10.81	10.81	10.81
		S/T	0.81	0.93	1.00	1.00	0.62	0.74	0.86	0.97	0.54	0.65	0.77	0.88	0.34	0.44	0.55	0.66
		PI	2.00	2.00	2.00	2.00	2.00	2.00	2.00	2.00	1.99	1.99	1.99	1.99	1.99	1.99	1.99	1.99
	20	TC	9.14	9.22	9.31	9.40	9.68	9.68	9.68	9.77	9.97	9.97	9.97	9.97	10.72	10.72	10.72	10.72
		S/T	0.81	0.93	1.00	1.00	0.62	0.74	0.86	0.97	0.54	0.65	0.77	0.88	0.34	0.44	0.55	0.66
		PI	2.06	2.06	2.06	2.06	2.06	2.06	2.06	2.06	2.06	2.06	2.06	2.06	2.05	2.05	2.05	2.05
	25	TC	8.71	8.79	8.88	8.96	9.25	9.25	9.25	9.34	9.54	9.54	9.54	9.63	10.26	10.26	10.26	10.26
		S/T	0.83	0.95	1.00	1.00	0.63	0.76	0.88	1.00	0.54	0.66	0.78	0.90	0.33	0.45	0.56	0.67
		PI	2.28	2.28	2.28	2.28	2.28	2.28	2.28	2.28	2.28	2.28	2.28	2.28	2.28	2.28	2.28	2.28
	30	TC	8.30	8.39	8.48	8.56	8.82	8.82	8.91	8.99	9.11	9.11	9.11	9.19	9.80	9.80	9.80	9.80
		S/T	0.84	0.98	1.00	1.00	0.64	0.77	0.90	1.00	0.55	0.67	0.80	0.92	0.33	0.45	0.56	0.68
		PI	2.50	2.50	2.50	2.50	2.51	2.51	2.51	2.51	2.51	2.51	2.51	2.51	2.52	2.52	2.52	2.52
	35	TC	7.90	7.99	8.07	8.16	8.39	8.39	8.48	8.56	8.65	8.65	**8.79**	8.88	9.34	9.34	9.34	9.34
		S/T	0.86	1.00	1.00	1.00	0.65	0.79	0.92	1.00	0.55	0.69	**0.81**	0.94	0.33	0.45	0.57	0.70
		PI	2.73	2.73	2.73	2.73	2.74	2.74	2.74	2.74	2.75	2.75	**2.75**	2.75	2.76	2.76	2.76	2.76
	40	TC	7.44	7.51	7.58	7.66	7.93	7.93	8.01	8.10	8.17	8.17	8.25	8.34	8.84	8.84	8.84	8.84
		S/T	0.90	1.00	1.00	1.00	0.67	0.82	0.97	1.00	0.57	0.71	0.85	0.99	0.32	0.46	0.59	0.90
		PI	3.01	3.01	3.01	3.01	3.03	3.03	3.03	3.03	3.04	3.04	3.04	3.04	3.06	3.06	3.06	3.06
	46	TC	6.87	6.93	6.99	7.05	7.36	7.36	7.45	7.53	7.59	7.59	7.59	7.68	8.23	8.23	8.23	8.23
		S/T	0.92	1.00	1.00	1.00	0.68	0.84	0.99	1.00	0.57	0.72	0.87	1.00	0.32	0.46	0.60	0.92
		PI	3.35	3.35	3.35	3.35	3.37	3.37	3.37	3.37	3.38	3.38	3.38	3.38	3.41	3.41	3.41	3.41
	50	TC	6.47	6.53	6.59	6.64	6.90	6.90	6.96	7.02	7.13	7.13	7.19	7.28	7.74	7.74	7.74	7.74
		S/T	0.95	1.00	1.00	1.00	0.70	0.86	1.00	1.00	0.58	0.74	0.90	1.00	0.32	0.47	0.61	0.97
		PI	3.63	3.63	3.63	3.63	3.64	3.64	3.64	3.64	3.65	3.65	3.65	3.65	3.68	3.68	3.68	3.68

TC:Total Cooling Capacity (kW)

S/T:Sensible Cooling Capacity Ratio

PI:Power Input(kW)

Note: The table shows the case where the operation frequency of a compressor is fixed.

36k+YDAX-100H-09M25																		
INDOOR AIRFLOW (CMH)	OUTDOOR DB(℃)	ID WB (℃)	16.0				18.0				19.0				22.0			
		ID DB (℃)	23.0	25.0	27.0	29.0	23.0	25.0	27.0	29.0	23.0	25.0	27.0	29.0	23.0	25.0	27.0	29.0
1300	-15	TC	11.05	11.06	11.06	11.18	11.63	11.87	11.87	11.87	11.90	11.90	11.90	11.90	12.65	12.65	12.65	12.65
		S/T	0.69	0.77	0.85	0.93	0.56	0.63	0.70	0.78	0.49	0.57	0.64	0.71	0.36	0.42	0.49	0.56
		PI	2.63	2.63	2.63	2.63	2.62	2.62	2.62	2.62	2.61	2.61	2.61	2.61	2.61	2.61	2.61	2.61
	-10	TC	10.99	11.00	11.00	11.11	11.56	11.80	11.80	11.80	11.84	11.84	11.84	11.84	12.60	12.60	12.60	12.60
		S/T	0.69	0.78	0.85	0.93	0.56	0.63	0.71	0.79	0.49	0.57	0.64	0.72	0.36	0.43	0.49	0.56
		PI	2.62	2.61	2.61	2.62	2.61	2.61	2.61	2.61	2.61	2.61	2.61	2.61	2.62	2.62	2.62	2.62
	-5	TC	10.92	10.93	10.93	11.05	11.52	11.76	11.76	11.76	11.80	11.80	11.80	11.80	12.57	12.57	12.57	12.57
		S/T	0.69	0.78	0.86	0.94	0.57	0.64	0.71	0.79	0.50	0.58	0.64	0.72	0.36	0.43	0.50	0.57
		PI	2.61	2.61	2.61	2.61	2.61	2.61	2.61	2.61	2.61	2.61	2.61	2.61	2.62	2.62	2.62	2.62
	0	TC	10.87	10.87	10.87	10.99	11.47	11.71	11.71	11.71	11.77	11.77	11.77	11.77	12.56	12.56	12.56	12.56
		S/T	0.70	0.78	0.86	0.94	0.57	0.64	0.72	0.79	0.50	0.58	0.65	0.73	0.36	0.43	0.50	0.57
		PI	2.62	2.62	2.62	2.62	2.62	2.62	2.62	2.62	2.62	2.62	2.62	2.62	2.63	2.63	2.63	2.63
	5	TC	10.81	10.82	10.82	10.94	11.43	11.67	11.67	11.67	11.73	11.73	11.73	11.73	12.55	12.55	12.55	12.55
		S/T	0.70	0.79	0.87	0.95	0.57	0.64	0.72	0.80	0.50	0.58	0.65	0.73	0.36	0.43	0.50	0.57
		PI	2.65	2.64	2.64	2.65	2.64	2.64	2.64	2.64	2.64	2.64	2.64	2.64	2.65	2.65	2.65	2.65
	10	TC	10.75	10.75	10.75	10.87	11.38	11.61	11.61	11.61	11.68	11.68	11.68	11.68	12.52	12.52	12.52	12.52
		S/T	0.70	0.79	0.87	0.95	0.57	0.65	0.72	0.80	0.50	0.58	0.65	0.73	0.37	0.44	0.50	0.57
		PI	2.69	2.69	2.69	2.69	2.68	2.68	2.68	2.68	2.68	2.68	2.68	2.68	2.68	2.68	2.68	2.68
	15	TC	10.66	10.67	10.67	10.78	11.30	11.54	11.54	11.54	11.61	11.61	11.61	11.61	12.46	12.46	12.46	12.46
		S/T	0.71	0.80	0.88	0.96	0.58	0.65	0.73	0.81	0.51	0.59	0.66	0.74	0.37	0.44	0.51	0.58
		PI	2.76	2.75	2.75	2.76	2.75	2.75	2.75	2.75	2.74	2.74	2.74	2.74	2.74	2.74	2.74	2.74
	20	TC	10.54	10.55	10.55	10.66	11.18	11.18	11.18	11.18	11.50	11.50	11.50	11.50	12.36	12.36	12.36	12.36
		S/T	0.71	0.80	0.88	0.96	0.58	0.65	0.73	0.81	0.51	0.59	0.66	0.74	0.37	0.44	0.51	0.58
		PI	2.85	2.85	2.85	2.85	2.84	2.84	2.84	2.84	2.83	2.83	2.83	2.83	2.82	2.82	2.82	2.82
	25	TC	10.06	10.06	10.17	10.29	10.69	10.69	10.69	10.69	11.01	11.01	11.01	11.01	11.84	11.84	11.84	11.84
		S/T	0.72	0.81	0.89	0.97	0.58	0.66	0.74	0.82	0.51	0.59	0.67	0.75	0.36	0.44	0.51	0.58
		PI	3.14	3.14	3.14	3.14	3.14	3.14	3.14	3.14	3.14	3.14	3.14	3.14	3.14	3.14	3.14	3.14
	30	TC	9.57	9.57	9.66	9.74	10.20	10.20	10.20	10.20	10.49	10.49	10.49	10.49	11.32	11.32	11.32	11.32
		S/T	0.73	0.82	0.91	1.00	0.58	0.67	0.75	0.84	0.52	0.60	0.68	0.77	0.36	0.44	0.51	0.59
		PI	3.44	3.44	3.44	3.44	3.45	3.45	3.45	3.45	3.46	3.46	3.46	3.46	3.47	3.47	3.47	3.47
	35	TC	9.11	9.11	9.20	9.28	9.68	9.68	9.68	9.68	10.00	10.00	10.14	10.00	10.78	10.78	10.78	10.78
		S/T	0.74	0.84	0.93	1.00	0.59	0.68	0.77	0.86	0.52	0.60	0.69	0.78	0.36	0.44	0.52	0.60
		PI	3.76	3.76	3.76	3.76	3.78	3.78	3.78	3.78	3.78	3.78	3.79	3.78	3.81	3.81	3.81	3.81
	40	TC	8.58	8.58	8.66	8.75	9.14	9.14	9.14	9.18	9.43	9.43	9.51	9.43	10.18	10.18	10.18	10.18
		S/T	0.76	0.87	0.97	1.00	0.60	0.70	0.80	0.89	0.52	0.62	0.71	0.81	0.35	0.44	0.53	0.61
		PI	4.15	4.15	4.15	4.15	4.17	4.17	4.17	4.17	4.18	4.18	4.18	4.18	4.21	4.21	4.21	4.21
	46	TC	7.93	7.93	8.02	8.10	8.48	8.48	8.48	8.56	8.74	8.74	8.74	8.74	9.46	9.46	9.46	9.46
		S/T	0.77	0.88	0.99	1.00	0.60	0.71	0.81	0.91	0.53	0.63	0.73	0.83	0.35	0.44	0.53	0.62
		PI	4.62	4.62	4.62	4.62	4.64	4.64	4.64	4.64	4.65	4.65	4.65	4.65	4.69	4.69	4.69	4.69
	50	TC	7.44	7.53	7.62	7.70	7.96	7.96	7.96	8.05	8.22	8.22	8.22	8.22	8.91	8.91	8.91	8.91
		S/T	0.79	0.90	1.00	1.00	0.61	0.72	0.83	0.94	0.53	0.64	0.74	0.85	0.34	0.44	0.54	0.64
		PI	5.00	5.00	5.00	5.00	5.02	5.02	5.02	5.02	5.03	5.03	5.03	5.03	5.07	5.07	5.07	5.07
1530	-15	TC	11.28	11.28	11.40	11.52	11.87	11.87	11.87	11.87	12.15	12.15	12.15	12.15	12.92	12.92	12.92	12.92
		S/T	0.71	0.81	0.98	1.00	0.57	0.66	0.74	0.83	0.50	0.59	0.67	0.75	0.35	0.42	0.50	0.58
		PI	2.68	2.68	2.68	2.68	2.68	2.68	2.68	2.68	2.67	2.67	2.67	2.67	2.67	2.67	2.67	2.67
	-10	TC	11.21	11.21	11.33	11.45	11.80	11.80	11.80	11.80	12.08	12.08	12.08	12.08	12.87	12.87	12.87	12.87
		S/T	0.72	0.82	0.99	1.00	0.57	0.66	0.75	0.83	0.50	0.59	0.67	0.76	0.35	0.43	0.50	0.58
		PI	2.67	2.67	2.67	2.67	2.67	2.67	2.67	2.67	2.67	2.67	2.67	2.67	2.67	2.67	2.67	2.67
	-5	TC	11.14	11.14	11.26	11.38	11.76	11.76	11.76	11.76	12.04	12.04	12.04	12.04	12.84	12.84	12.84	12.84
		S/T	0.72	0.82	0.99	1.00	0.58	0.66	0.75	0.84	0.51	0.59	0.67	0.76	0.35	0.43	0.51	0.59
		PI	2.67	2.67	2.67	2.67	2.67	2.67	2.67	2.67	2.67	2.67	2.67	2.67	2.67	2.67	2.67	2.67
	0	TC	11.09	11.09	11.21	11.32	11.71	11.71	11.71	11.71	12.01	12.01	12.01	12.01	12.83	12.83	12.83	12.83
		S/T	0.73	0.82	1.00	1.00	0.58	0.67	0.75	0.84	0.51	0.60	0.68	0.76	0.35	0.43	0.51	0.59
		PI	2.68	2.68	2.68	2.68	2.68	2.68	2.68	2.68	2.68	2.68	2.68	2.68	2.68	2.68	2.68	2.68
	5	TC	11.03	11.03	11.15	11.27	11.67	11.67	11.67	11.67	11.97	11.97	11.97	11.97	12.82	12.82	12.82	12.82
		S/T	0.73	0.83	1.00	1.00	0.58	0.67	0.76	0.85	0.51	0.60	0.68	0.77	0.35	0.43	0.51	0.59
		PI	2.70	2.70	2.70	2.70	2.70	2.70	2.70	2.70	2.70	2.70	2.70	2.70	2.70	2.70	2.70	2.70
	10	TC	10.96	10.96	11.08	11.20	11.61	11.61	11.61	11.61	11.92	11.92	11.92	11.92	12.78	12.78	12.78	12.78
		S/T	0.73	0.83	1.00	1.00	0.58	0.67	0.76	0.85	0.51	0.60	0.68	0.77	0.36	0.44	0.51	0.59
		PI	2.75	2.75	2.75	2.75	2.74	2.74	2.74	2.74	2.74	2.74	2.74	2.74	2.74	2.74	2.74	2.74
	15	TC	10.87	10.87	10.99	11.11	11.54	11.54	11.54	11.54	11.85	11.85	11.85	11.85	12.73	12.73	12.73	12.73
		S/T	0.74	0.84	0.93	1.00	0.59	0.68	0.77	0.86	0.52	0.61	0.69	0.78	0.36	0.44	0.52	0.60
		PI	2.81	2.81	2.81	2.81	2.81	2.81	2.81	2.81	2.80	2.80	2.80	2.80	2.80	2.80	2.80	2.80
	20	TC	10.75	10.75	10.87	10.98	11.41	11.41	11.41	11.41	11.73	11.73	11.73	11.73	12.62	12.62	12.62	12.62
		S/T	0.74	0.84	0.93	1.00	0.59	0.68	0.77	0.86	0.52	0.61	0.69	0.78	0.36	0.44	0.52	0.60
		PI	2.91	2.91	2.91	2.91	2.90	2.90	2.90	2.90	2.89	2.89	2.89	2.89	2.88	2.88	2.88	2.88
	25	TC	10.26	10.26	10.38	10.49	10.90	10.90	10.90	10.90	11.21	11.21	11.21	11.21	12.07	12.07	12.07	12.07
		S/T	0.75	0.85	0.95	1.00	0.59	0.69	0.78	0.88	0.52	0.61	0.70	0.80	0.35	0.44	0.52	0.61
		PI	3.21	3.21	3.21	3.21	3.21	3.21	3.21	3.21	3.21	3.21	3.21	3.21	3.21	3.21	3.21	3.21
	30	TC	9.77	9.77	9.86	9.95	10.41	10.41	10.41	10.52	10.72	10.72	10.72	10.72	11.53	11.53	11.53	11.53
		S/T	0.76	0.87	0.97	1.00	0.60	0.70	0.80	0.89	0.52	0.62	0.71	0.81	0.35	0.44	0.53	0.62
		PI	3.52	3.52	3.52	3.52	3.52	3.52	3.52	3.52	3.53	3.53	3.53	3.53	3.54	3.54	3.54	3.54
	35	TC	9.29	9.37	9.46	9.54	9.89	9.89	9.89	9.98	10.18	10.18	10.35	10.18	10.98	10.98	10.98	10.98
		S/T	0.78	0.88	0.99	1.00	0.61	0.71	0.81	0.91	0.53	0.63	0.72	0.83	0.35	0.44	0.53	0.63
		PI	3.84	3.84	3.84	3.84	3.86	3.86	3.86	3.86	3.86	3.86	3.87	3.86	3.86	3.86	3.86	3.86
	40	TC	8.67	8.75	8.84	8.93	9.24	9.24	9.24	9.33	9.51	9.51	9.61	9.51	10.28	10.28	10.28	10.28
		S/T	0.80	0.92	1.00	1.00	0.62	0.73	0.85	0.96	0.53	0.64	0.76	0.87	0.34	0.44	0.54	0.65
		PI	4.24	4.24	4.24	4.24	4.26	4.26	4.26	4.26	4.27	4.27	4.27	4.27	4.28	4.28	4.28	4.28
	46	TC	8.03	8.12	8.20	8.29	8.57	8.57	8.57	8.66	8.83	8.83	8.83	8.83	9.57	9.57	9.57	9.57
		S/T	0.82	0.94	1.00	1.00	0.63	0.74	0.86	0.98	0.54	0.65	0.77	0.88	0.34	0.44	0.55	0.66
		PI	4.71	4.71	4.71	4.71	4.74	4.74	4.74	4.74	4.75	4.75	4.75	4.75	4.79	4.79	4.79	4.79
	50	TC	7.52	7.60	7.69	7.78	8.06	8.06	8.15	8.23	8.32	8.32	8.32	8.40	9.03	9.03	9.03	9.03
		S/T	0.84	0.97	1.00	1.00	0.64	0.76	0.89	1.00	0.54	0.67	0.79	0.91	0.33	0.45	0.56	0.91
		PI	5.10	5.10	5.10	5.10	5.13	5.13	5.13	5.13	5.14	5.14	5.14	5.14	5.18	5.18	5.18	5.18

1700	-15	TC	11.49	11.49	11.61	11.73	12.08	12.08	12.08	12.20	12.38	12.38	12.38	12.38	13.15	13.15	13.15	13.15
		S/T	0.73	0.83	1.00	1.00	0.58	0.68	0.76	0.98	0.50	0.60	0.69	0.78	0.34	0.42	0.51	0.60
		PI	2.74	2.74	2.74	2.74	2.73	2.73	2.73	2.73	2.72	2.72	2.72	2.72	2.72	2.72	2.72	2.72
	-10	TC	11.42	11.42	11.54	11.66	12.01	12.01	12.01	12.13	12.32	12.32	12.32	12.32	13.11	13.11	13.11	13.11
		S/T	0.74	0.83	1.00	1.00	0.58	0.68	0.77	0.98	0.50	0.60	0.69	0.79	0.34	0.43	0.51	0.60
		PI	2.72	2.72	2.72	2.72	2.72	2.72	2.72	2.72	2.72	2.72	2.72	2.72	2.73	2.73	2.73	2.73
	-5	TC	11.35	11.35	11.47	11.59	11.97	11.97	11.97	12.08	12.28	12.28	12.28	12.28	13.07	13.07	13.07	13.07
		S/T	0.74	0.84	1.00	1.00	0.59	0.68	0.77	0.99	0.51	0.60	0.69	0.79	0.34	0.43	0.52	0.60
		PI	2.72	2.72	2.72	2.72	2.72	2.72	2.72	2.72	2.72	2.72	2.72	2.72	2.73	2.73	2.73	2.73
	0	TC	11.29	11.29	11.41	11.53	11.92	11.92	11.92	12.04	12.24	12.24	12.24	12.24	13.06	13.06	13.06	13.06
		S/T	0.74	0.84	1.00	1.00	0.59	0.69	0.77	0.99	0.51	0.61	0.70	0.79	0.34	0.43	0.52	0.61
		PI	2.73	2.73	2.73	2.73	2.73	2.73	2.73	2.73	2.73	2.73	2.73	2.73	2.74	2.74	2.74	2.74
	5	TC	11.24	11.24	11.36	11.47	11.87	11.87	11.87	11.99	12.20	12.20	12.20	12.20	13.05	13.05	13.05	13.05
		S/T	0.75	0.85	1.00	1.00	0.59	0.69	0.78	1.00	0.51	0.61	0.70	0.80	0.34	0.43	0.52	0.61
		PI	2.76	2.76	2.76	2.76	2.76	2.76	2.76	2.76	2.75	2.75	2.75	2.75	2.76	2.76	2.76	2.76
	10	TC	11.17	11.17	11.29	11.40	11.82	11.82	11.82	11.94	12.15	12.15	12.15	12.15	13.02	13.02	13.02	13.02
		S/T	0.75	0.85	1.00	1.00	0.59	0.69	0.78	1.00	0.51	0.61	0.70	0.80	0.35	0.44	0.52	0.61
		PI	2.80	2.80	2.80	2.80	2.80	2.80	2.80	2.80	2.79	2.79	2.79	2.79	2.80	2.80	2.80	2.80
	15	TC	11.08	11.08	11.19	11.31	11.74	11.74	11.74	11.86	12.08	12.08	12.08	12.08	12.96	12.96	12.96	12.96
		S/T	0.76	0.86	0.96	1.00	0.60	0.70	0.79	0.89	0.52	0.62	0.71	0.81	0.35	0.44	0.53	0.62
		PI	2.87	2.87	2.87	2.87	2.86	2.86	2.86	2.86	2.86	2.86	2.86	2.86	2.85	2.85	2.85	2.85
	20	TC	10.95	10.95	11.07	11.18	11.61	11.61	11.61	11.73	11.96	11.96	11.96	11.96	12.85	12.85	12.85	12.85
		S/T	0.76	0.86	0.96	1.00	0.60	0.70	0.79	0.89	0.52	0.62	0.71	0.81	0.35	0.44	0.53	0.62
		PI	2.97	2.97	2.97	2.97	2.96	2.96	2.96	2.96	2.95	2.95	2.95	2.95	2.94	2.94	2.94	2.94
	25	TC	10.46	10.46	10.58	10.69	11.10	11.10	11.10	11.21	11.44	11.44	11.44	11.44	12.30	12.30	12.30	12.30
		S/T	0.77	0.88	0.98	1.00	0.60	0.71	0.81	0.91	0.53	0.63	0.73	0.83	0.35	0.44	0.53	0.62
		PI	3.27	3.27	3.27	3.27	3.27	3.27	3.27	3.27	3.27	3.27	3.27	3.27	3.27	3.27	3.27	3.27
	30	TC	9.98	10.06	10.18	10.29	10.61	10.61	10.61	10.72	10.92	10.92	10.92	10.92	11.76	11.76	11.76	11.76
		S/T	0.79	0.90	1.00	1.00	0.61	0.72	0.83	0.93	0.53	0.63	0.74	0.84	0.34	0.44	0.54	0.63
		PI	3.59	3.59	3.59	3.59	3.60	3.60	3.60	3.60	3.60	3.60	3.60	3.60	3.62	3.62	3.62	3.62
	35	TC	9.46	9.54	9.63	9.72	10.06	10.06	10.06	10.18	10.38	10.38	**10.55**	10.38	11.21	11.21	11.21	11.21
		S/T	0.80	0.92	1.00	1.00	0.62	0.73	0.85	0.95	0.53	0.64	**0.75**	0.86	0.34	0.44	0.54	0.65
		PI	3.92	3.92	3.92	3.92	3.94	3.94	3.94	3.94	3.94	3.94	**3.95**	3.94	3.97	3.97	3.97	3.97
	40	TC	8.83	8.91	9.00	9.08	9.40	9.40	9.44	9.54	9.70	9.70	9.79	9.74	10.50	10.50	10.50	10.50
		S/T	0.83	0.96	1.00	1.00	0.63	0.76	0.88	1.00	0.54	0.66	0.78	0.90	0.33	0.45	0.56	0.90
		PI	4.32	4.32	4.32	4.32	4.34	4.34	4.34	4.34	4.35	4.35	4.36	4.35	4.39	4.39	4.39	4.39
	46	TC	8.17	8.26	8.35	8.43	8.72	8.72	8.80	8.89	9.00	9.00	9.00	9.09	9.77	9.77	9.77	9.77
		S/T	0.85	0.98	1.00	1.00	0.64	0.77	0.90	1.00	0.55	0.67	0.80	0.92	0.33	0.45	0.56	0.92
		PI	4.81	4.81	4.81	4.81	4.83	4.83	4.83	4.83	4.85	4.85	4.85	4.85	4.89	4.89	4.89	4.89
	50	TC	7.66	7.75	7.83	7.92	8.20	8.20	8.29	8.37	8.49	8.49	8.49	8.57	9.20	9.20	9.20	9.20
		S/T	0.87	1.00	1.00	1.00	0.65	0.79	0.93	1.00	0.55	0.69	0.82	0.95	0.33	0.45	0.57	0.97
		PI	5.21	5.21	5.21	5.21	5.23	5.23	5.23	5.23	5.25	5.25	5.25	5.25	5.29	5.29	5.29	5.29

TC:Total Cooling Capacity (kW)

S/T:Sensible Cooling Capacity Ratio

PI:Power Input(kW)

Note: The table shows the case where the operation frequency of a compressor is fixed.

36k+YDAX-100H-09T35																		
INDOOR AIRFLOW (CMH)	OUTDOOR DB(℃)	ID WB (℃)	16.0				18.0				19.0				22.0			
		ID DB (℃)	23.0	25.0	27.0	29.0	23.0	25.0	27.0	29.0	23.0	25.0	27.0	29.0	23.0	25.0	27.0	29.0
1300	-15	TC	11.05	11.06	11.06	11.18	11.63	11.87	11.87	11.87	11.90	11.90	11.90	11.90	12.65	12.65	12.65	12.65
		S/T	0.69	0.77	0.85	0.93	0.56	0.63	0.70	0.78	0.49	0.57	0.64	0.71	0.36	0.42	0.49	0.56
		PI	2.66	2.66	2.66	2.66	2.66	2.66	2.66	2.66	2.65	2.65	2.65	2.65	2.65	2.65	2.65	2.65
	-10	TC	10.99	11.00	11.00	11.11	11.56	11.80	11.80	11.80	11.84	11.84	11.84	11.84	12.60	12.60	12.60	12.60
		S/T	0.69	0.78	0.85	0.93	0.56	0.63	0.71	0.79	0.49	0.57	0.64	0.72	0.36	0.43	0.49	0.56
		PI	2.65	2.65	2.65	2.65	2.65	2.65	2.65	2.65	2.65	2.65	2.65	2.65	2.65	2.65	2.65	2.65
	-5	TC	10.92	10.93	10.93	11.05	11.52	11.76	11.76	11.76	11.80	11.80	11.80	11.80	12.57	12.57	12.57	12.57
		S/T	0.69	0.78	0.86	0.94	0.57	0.64	0.71	0.79	0.50	0.58	0.64	0.72	0.36	0.43	0.50	0.57
		PI	2.65	2.65	2.65	2.65	2.65	2.65	2.65	2.65	2.65	2.65	2.65	2.65	2.66	2.66	2.66	2.66
	0	TC	10.87	10.87	10.87	10.99	11.47	11.71	11.71	11.71	11.77	11.77	11.77	11.77	12.56	12.56	12.56	12.56
		S/T	0.70	0.78	0.86	0.94	0.57	0.64	0.72	0.79	0.50	0.58	0.65	0.73	0.36	0.43	0.50	0.57
		PI	2.66	2.66	2.66	2.66	2.66	2.66	2.66	2.66	2.66	2.66	2.66	2.66	2.67	2.67	2.67	2.67
	5	TC	10.81	10.82	10.82	10.94	11.43	11.67	11.67	11.67	11.73	11.73	11.73	11.73	12.55	12.55	12.55	12.55
		S/T	0.70	0.79	0.87	0.95	0.57	0.64	0.72	0.80	0.50	0.58	0.65	0.73	0.36	0.43	0.50	0.57
		PI	2.68	2.68	2.68	2.68	2.68	2.68	2.68	2.68	2.68	2.68	2.68	2.68	2.69	2.69	2.69	2.69
	10	TC	10.75	10.75	10.75	10.87	11.38	11.61	11.61	11.61	11.68	11.68	11.68	11.68	12.52	12.52	12.52	12.52
		S/T	0.70	0.79	0.87	0.95	0.57	0.65	0.72	0.80	0.50	0.58	0.65	0.73	0.37	0.44	0.50	0.57
		PI	2.73	2.73	2.73	2.73	2.72	2.72	2.72	2.72	2.72	2.72	2.72	2.72	2.72	2.72	2.72	2.72
	15	TC	10.66	10.67	10.67	10.78	11.30	11.54	11.54	11.54	11.61	11.61	11.61	11.61	12.46	12.46	12.46	12.46
		S/T	0.71	0.80	0.88	0.96	0.58	0.65	0.73	0.81	0.51	0.59	0.66	0.74	0.37	0.44	0.51	0.58
		PI	2.79	2.79	2.79	2.79	2.79	2.79	2.79	2.79	2.78	2.78	2.78	2.78	2.78	2.78	2.78	2.78
	20	TC	10.54	10.55	10.55	10.66	11.18	11.18	11.18	11.18	11.50	11.50	11.50	11.50	12.36	12.36	12.36	12.36
		S/T	0.71	0.80	0.88	0.96	0.58	0.65	0.73	0.81	0.51	0.59	0.66	0.74	0.37	0.44	0.51	0.58
		PI	2.89	2.89	2.89	2.89	2.88	2.88	2.88	2.88	2.87	2.87	2.87	2.87	2.86	2.86	2.86	2.86
	25	TC	10.06	10.06	10.17	10.29	10.69	10.69	10.69	10.69	11.01	11.01	11.01	11.01	11.84	11.84	11.84	11.84
		S/T	0.72	0.81	0.89	0.97	0.58	0.66	0.74	0.82	0.51	0.59	0.67	0.75	0.36	0.44	0.51	0.58
		PI	3.19	3.19	3.19	3.19	3.19	3.19	3.19	3.19	3.19	3.19	3.19	3.19	3.19	3.19	3.19	3.19
	30	TC	9.57	9.57	9.66	9.74	10.20	10.20	10.20	10.20	10.49	10.49	10.49	10.49	11.32	11.32	11.32	11.32
		S/T	0.73	0.82	0.91	1.00	0.58	0.67	0.75	0.84	0.52	0.60	0.68	0.77	0.36	0.44	0.51	0.59
		PI	3.49	3.49	3.49	3.49	3.50	3.50	3.50	3.50	3.50	3.50	3.50	3.50	3.52	3.52	3.52	3.52
	35	TC	9.11	9.11	9.20	9.28	9.68	9.68	9.68	9.68	10.00	10.00	10.14	10.00	10.78	10.78	10.78	10.78
		S/T	0.74	0.84	0.93	1.00	0.59	0.68	0.77	0.86	0.52	0.60	0.69	0.78	0.36	0.44	0.52	0.60
		PI	3.81	3.81	3.81	3.81	3.83	3.83	3.83	3.83	3.83	3.83	3.84	3.83	3.86	3.86	3.86	3.86
	40	TC	8.58	8.58	8.66	8.75	9.14	9.14	9.14	9.18	9.43	9.43	9.51	9.43	10.18	10.18	10.18	10.18
		S/T	0.76	0.87	0.97	1.00	0.60	0.70	0.80	0.89	0.52	0.62	0.71	0.81	0.35	0.44	0.53	0.61
		PI	4.21	4.21	4.21	4.21	4.23	4.23	4.23	4.23	4.23	4.23	4.24	4.23	4.26	4.26	4.26	4.26
	46	TC	7.93	7.93	8.02	8.10	8.48	8.48	8.48	8.56	8.74	8.74	8.74	8.74	9.46	9.46	9.46	9.46
		S/T	0.77	0.88	0.99	1.00	0.60	0.71	0.81	0.91	0.53	0.63	0.73	0.83	0.35	0.44	0.53	0.62
		PI	4.68	4.68	4.68	4.68	4.70	4.70	4.70	4.70	4.71	4.71	4.71	4.71	4.75	4.75	4.75	4.75
	50	TC	7.44	7.53	7.62	7.70	7.96	7.96	7.96	8.05	8.22	8.22	8.22	8.22	8.91	8.91	8.91	8.91
		S/T	0.79	0.90	1.00	1.00	0.61	0.72	0.83	0.94	0.53	0.64	0.74	0.85	0.34	0.44	0.54	0.64
		PI	5.06	5.06	5.06	5.06	5.09	5.09	5.09	5.09	5.10	5.10	5.10	5.10	5.14	5.14	5.14	5.14
1530	-15	TC	11.28	11.28	11.40	11.52	11.87	11.87	11.87	11.87	12.15	12.15	12.15	12.15	12.92	12.92	12.92	12.92
		S/T	0.71	0.81	0.98	1.00	0.57	0.66	0.74	0.83	0.50	0.59	0.67	0.75	0.35	0.42	0.50	0.58
		PI	2.72	2.72	2.72	2.72	2.71	2.71	2.71	2.71	2.71	2.71	2.71	2.71	2.71	2.71	2.71	2.71
	-10	TC	11.21	11.21	11.33	11.45	11.80	11.80	11.80	11.80	12.08	12.08	12.08	12.08	12.87	12.87	12.87	12.87
		S/T	0.72	0.82	0.99	1.00	0.57	0.66	0.75	0.83	0.50	0.59	0.67	0.76	0.35	0.43	0.50	0.58
		PI	2.71	2.71	2.71	2.71	2.71	2.71	2.71	2.71	2.70	2.70	2.70	2.70	2.71	2.71	2.71	2.71
	-5	TC	11.14	11.14	11.26	11.38	11.76	11.76	11.76	11.76	12.04	12.04	12.04	12.04	12.84	12.84	12.84	12.84
		S/T	0.72	0.82	0.99	1.00	0.58	0.66	0.75	0.84	0.51	0.59	0.67	0.76	0.35	0.43	0.51	0.59
		PI	2.70	2.70	2.70	2.70	2.70	2.70	2.70	2.70	2.70	2.70	2.70	2.70	2.71	2.71	2.71	2.71
	0	TC	11.09	11.09	11.21	11.32	11.71	11.71	11.71	11.71	12.01	12.01	12.01	12.01	12.83	12.83	12.83	12.83
		S/T	0.73	0.82	1.00	1.00	0.58	0.67	0.75	0.84	0.51	0.60	0.68	0.76	0.35	0.43	0.51	0.59
		PI	2.71	2.71	2.71	2.71	2.71	2.71	2.71	2.71	2.71	2.71	2.71	2.71	2.72	2.72	2.72	2.72
	5	TC	11.03	11.03	11.15	11.27	11.67	11.67	11.67	11.67	11.97	11.97	11.97	11.97	12.82	12.82	12.82	12.82
		S/T	0.73	0.83	1.00	1.00	0.58	0.67	0.76	0.85	0.51	0.60	0.68	0.77	0.35	0.43	0.51	0.59
		PI	2.74	2.74	2.74	2.74	2.74	2.74	2.74	2.74	2.73	2.73	2.73	2.73	2.74	2.74	2.74	2.74
	10	TC	10.96	10.96	11.08	11.20	11.61	11.61	11.61	11.61	11.92	11.92	11.92	11.92	12.78	12.78	12.78	12.78
		S/T	0.73	0.83	1.00	1.00	0.58	0.67	0.76	0.85	0.51	0.60	0.68	0.77	0.36	0.44	0.51	0.59
		PI	2.78	2.78	2.78	2.78	2.78	2.78	2.78	2.78	2.77	2.77	2.77	2.77	2.78	2.78	2.78	2.78
	15	TC	10.87	10.87	10.99	11.11	11.54	11.54	11.54	11.54	11.85	11.85	11.85	11.85	12.73	12.73	12.73	12.73
		S/T	0.74	0.84	0.93	1.00	0.59	0.68	0.77	0.86	0.52	0.61	0.69	0.78	0.36	0.44	0.52	0.60
		PI	2.85	2.85	2.85	2.85	2.84	2.84	2.84	2.84	2.84	2.84	2.84	2.84	2.84	2.84	2.84	2.84
	20	TC	10.75	10.75	10.87	10.98	11.41	11.41	11.41	11.41	11.73	11.73	11.73	11.73	12.62	12.62	12.62	12.62
		S/T	0.74	0.84	0.93	1.00	0.59	0.68	0.77	0.86	0.52	0.61	0.69	0.78	0.36	0.44	0.52	0.60
		PI	2.95	2.95	2.95	2.95	2.94	2.94	2.94	2.94	2.93	2.93	2.93	2.93	2.92	2.92	2.92	2.92
	25	TC	10.26	10.26	10.38	10.49	10.90	10.90	10.90	10.90	11.21	11.21	11.21	11.21	12.07	12.07	12.07	12.07
		S/T	0.75	0.85	0.95	1.00	0.59	0.69	0.78	0.88	0.52	0.61	0.70	0.80	0.35	0.44	0.52	0.61
		PI	3.25	3.25	3.25	3.25	3.25	3.25	3.25	3.25	3.25	3.25	3.25	3.25	3.25	3.25	3.25	3.25
	30	TC	9.77	9.77	9.86	9.95	10.41	10.41	10.41	10.52	10.72	10.72	10.72	10.72	11.53	11.53	11.53	11.53
		S/T	0.76	0.87	0.97	1.00	0.60	0.70	0.80	0.89	0.52	0.62	0.71	0.81	0.35	0.44	0.53	0.62
		PI	3.56	3.56	3.56	3.56	3.57	3.57	3.57	3.57	3.57	3.57	3.57	3.57	3.59	3.59	3.59	3.59
	35	TC	9.29	9.37	9.46	9.54	9.89	9.89	9.89	9.98	10.18	10.18	10.35	10.18	10.98	10.98	10.98	10.98
		S/T	0.78	0.88	0.99	1.00	0.61	0.71	0.81	0.91	0.53	0.63	0.72	0.83	0.35	0.44	0.53	0.63
		PI	3.89	3.89	3.89	3.89	3.91	3.91	3.91	3.91	3.91	3.91	3.92	3.91	3.91	3.91	3.91	3.91
	40	TC	8.67	8.75	8.84	8.93	9.24	9.24	9.24	9.33	9.51	9.51	9.61	9.51	10.28	10.28	10.28	10.28
		S/T	0.80	0.92	1.00	1.00	0.62	0.73	0.85	0.96	0.53	0.64	0.76	0.87	0.34	0.44	0.54	0.65
		PI	4.29	4.29	4.29	4.29	4.32	4.32	4.32	4.32	4.32	4.32	4.33	4.32	4.34	4.34	4.34	4.34
	46	TC	8.03	8.12	8.20	8.29	8.57	8.57	8.57	8.66	8.83	8.83	8.83	8.83	9.57	9.57	9.57	9.57
		S/T	0.82	0.94	1.00	1.00	0.63	0.74	0.86	0.98	0.54	0.65	0.77	0.88	0.34	0.44	0.55	0.66
		PI	4.77	4.77	4.77	4.77	4.80	4.80	4.80	4.80	4.81	4.81	4.81	4.81	4.85	4.85	4.85	4.85
	50	TC	7.52	7.60	7.69	7.78	8.06	8.06	8.15	8.23	8.32	8.32	8.32	8.40	9.03	9.03	9.03	9.03
		S/T	0.84	0.97	1.00	1.00	0.64	0.76	0.89	1.00	0.54	0.67	0.79	0.91	0.33	0.45	0.56	0.91
		PI	5.17	5.17	5.17	5.17	5.19	5.19	5.19	5.19	5.21	5.21	5.21	5.21	5.25	5.25	5.25	5.25

1700	-15	TC	11.49	11.49	11.61	11.73	12.08	12.08	12.08	12.20	12.38	12.38	12.38	12.38	13.15	13.15	13.15	13.15
		S/T	0.73	0.83	1.00	1.00	0.58	0.68	0.76	0.98	0.50	0.60	0.69	0.78	0.34	0.42	0.51	0.60
		PI	2.77	2.77	2.77	2.77	2.77	2.77	2.77	2.77	2.76	2.76	2.76	2.76	2.76	2.76	2.76	2.76
	-10	TC	11.42	11.42	11.54	11.66	12.01	12.01	12.01	12.13	12.32	12.32	12.32	12.32	13.11	13.11	13.11	13.11
		S/T	0.74	0.83	1.00	1.00	0.58	0.68	0.77	0.98	0.50	0.60	0.69	0.79	0.34	0.43	0.51	0.60
		PI	2.76	2.76	2.76	2.76	2.76	2.76	2.76	2.76	2.76	2.76	2.76	2.76	2.76	2.76	2.76	2.76
	-5	TC	11.35	11.35	11.47	11.59	11.97	11.97	11.97	12.08	12.28	12.28	12.28	12.28	13.07	13.07	13.07	13.07
		S/T	0.74	0.84	1.00	1.00	0.59	0.68	0.77	0.99	0.51	0.60	0.69	0.79	0.34	0.43	0.52	0.60
		PI	2.76	2.76	2.76	2.76	2.76	2.76	2.76	2.76	2.76	2.76	2.76	2.76	2.77	2.77	2.77	2.77
	0	TC	11.29	11.29	11.41	11.53	11.92	11.92	11.92	12.04	12.24	12.24	12.24	12.24	13.06	13.06	13.06	13.06
		S/T	0.74	0.84	1.00	1.00	0.59	0.69	0.77	0.99	0.51	0.61	0.70	0.79	0.34	0.43	0.52	0.61
		PI	2.77	2.77	2.77	2.77	2.77	2.77	2.77	2.77	2.77	2.77	2.77	2.77	2.78	2.78	2.78	2.78
	5	TC	11.24	11.24	11.36	11.47	11.87	11.87	11.87	11.99	12.20	12.20	12.20	12.20	13.05	13.05	13.05	13.05
		S/T	0.75	0.85	1.00	1.00	0.59	0.69	0.78	1.00	0.51	0.61	0.70	0.80	0.34	0.43	0.52	0.61
		PI	2.79	2.79	2.79	2.79	2.79	2.79	2.79	2.79	2.79	2.79	2.79	2.79	2.80	2.80	2.80	2.80
	10	TC	11.17	11.17	11.29	11.40	11.82	11.82	11.82	11.94	12.15	12.15	12.15	12.15	13.02	13.02	13.02	13.02
		S/T	0.75	0.85	1.00	1.00	0.59	0.69	0.78	1.00	0.51	0.61	0.70	0.80	0.35	0.44	0.52	0.61
		PI	2.84	2.84	2.84	2.84	2.83	2.83	2.83	2.83	2.83	2.83	2.83	2.83	2.83	2.83	2.83	2.83
	15	TC	11.08	11.08	11.19	11.31	11.74	11.74	11.74	11.86	12.08	12.08	12.08	12.08	12.96	12.96	12.96	12.96
		S/T	0.76	0.86	0.96	1.00	0.60	0.70	0.79	0.89	0.52	0.62	0.71	0.81	0.35	0.44	0.53	0.62
		PI	2.91	2.91	2.91	2.91	2.90	2.90	2.90	2.90	2.89	2.89	2.89	2.89	2.89	2.89	2.89	2.89
	20	TC	10.95	10.95	11.07	11.18	11.61	11.61	11.61	11.73	11.96	11.96	11.96	11.96	12.85	12.85	12.85	12.85
		S/T	0.76	0.86	0.96	1.00	0.60	0.70	0.79	0.89	0.52	0.62	0.71	0.81	0.35	0.44	0.53	0.62
		PI	3.01	3.01	3.01	3.01	3.00	3.00	3.00	3.00	2.99	2.99	2.99	2.99	2.98	2.98	2.98	2.98
	25	TC	10.46	10.46	10.58	10.69	11.10	11.10	11.10	11.21	11.44	11.44	11.44	11.44	12.30	12.30	12.30	12.30
		S/T	0.77	0.88	0.98	1.00	0.60	0.71	0.81	0.91	0.53	0.63	0.73	0.83	0.35	0.44	0.53	0.62
		PI	3.31	3.31	3.31	3.31	3.31	3.31	3.31	3.31	3.31	3.31	3.31	3.31	3.31	3.31	3.31	3.31
	30	TC	9.98	10.06	10.18	10.29	10.61	10.61	10.61	10.72	10.92	10.92	10.92	10.92	11.76	11.76	11.76	11.76
		S/T	0.79	0.90	1.00	1.00	0.61	0.72	0.83	0.93	0.53	0.63	0.74	0.84	0.34	0.44	0.54	0.63
		PI	3.63	3.63	3.63	3.63	3.64	3.64	3.64	3.64	3.65	3.65	3.65	3.65	3.66	3.66	3.66	3.66
	35	TC	9.46	9.54	9.63	9.72	10.06	10.06	10.06	10.18	10.38	10.38	**10.55**	10.38	11.21	11.21	11.21	11.21
		S/T	0.80	0.92	1.00	1.00	0.62	0.73	0.85	0.95	0.53	0.64	**0.75**	0.86	0.34	0.44	0.54	0.65
		PI	3.97	3.97	3.97	3.97	3.99	3.99	3.99	3.99	3.99	3.99	**4.00**	3.99	4.02	4.02	4.02	4.02
	40	TC	8.83	8.91	9.00	9.08	9.40	9.40	9.44	9.54	9.70	9.70	9.79	9.74	10.50	10.50	10.50	10.50
		S/T	0.83	0.96	1.00	1.00	0.63	0.76	0.88	1.00	0.54	0.66	0.78	0.90	0.33	0.45	0.56	0.90
		PI	4.38	4.38	4.38	4.38	4.40	4.40	4.40	4.40	4.41	4.41	4.41	4.41	4.44	4.44	4.44	4.44
	46	TC	8.17	8.26	8.35	8.43	8.72	8.72	8.80	8.89	9.00	9.00	9.00	9.09	9.77	9.77	9.77	9.77
		S/T	0.85	0.98	1.00	1.00	0.64	0.77	0.90	1.00	0.55	0.67	0.80	0.92	0.33	0.45	0.56	0.92
		PI	4.87	4.87	4.87	4.87	4.89	4.89	4.89	4.89	4.91	4.91	4.91	4.91	4.95	4.95	4.95	4.95
	50	TC	7.66	7.75	7.83	7.92	8.20	8.20	8.29	8.37	8.49	8.49	8.49	8.57	9.20	9.20	9.20	9.20
		S/T	0.87	1.00	1.00	1.00	0.65	0.79	0.93	1.00	0.55	0.69	0.82	0.95	0.33	0.45	0.57	0.97
		PI	5.27	5.27	5.27	5.27	5.30	5.30	5.30	5.30	5.31	5.31	5.31	5.31	5.35	5.35	5.35	5.35

TC:Total Cooling Capacity (kW)

S/T:Sensible Cooling Capacity Ratio

PI:Power Input(kW)

Note: The table shows the case where the operation frequency of a compressor is fixed.

42k																		
INDOOR AIRFLOW (CMH)	OUTDOOR DB(℃)	ID WB (℃)	16.0				18.0				19.0				22.0			
		ID DB (℃)	23.0	25.0	27.0	29.0	23.0	25.0	27.0	29.0	23.0	25.0	27.0	29.0	23.0	25.0	27.0	29.0
1600	-15	TC	12.59	12.60	12.72	12.84	13.24	13.51	13.51	13.51	13.57	13.57	13.57	13.57	14.41	14.41	14.41	14.41
		S/T	0.70	0.79	0.87	0.96	0.56	0.64	0.72	0.81	0.50	0.58	0.66	0.73	0.35	0.42	0.49	0.57
		PI	2.80	2.80	2.80	2.80	2.80	2.80	2.80	2.80	2.79	2.79	2.79	2.79	2.79	2.79	2.79	2.79
	-10	TC	12.51	12.52	12.64	12.76	13.16	13.44	13.44	13.44	13.50	13.50	13.50	13.50	14.36	14.36	14.36	14.36
		S/T	0.71	0.80	0.87	0.96	0.56	0.65	0.73	0.82	0.50	0.58	0.66	0.74	0.35	0.43	0.49	0.57
		PI	2.79	2.79	2.79	2.79	2.79	2.79	2.79	2.79	2.78	2.78	2.78	2.78	2.79	2.79	2.79	2.79
	-5	TC	12.44	12.45	12.57	12.69	13.11	13.39	13.39	13.39	13.45	13.45	13.45	13.45	14.32	14.32	14.32	14.32
		S/T	0.71	0.80	0.88	0.97	0.57	0.65	0.73	0.82	0.51	0.59	0.66	0.74	0.35	0.43	0.50	0.58
		PI	2.79	2.78	2.78	2.79	2.79	2.79	2.79	2.79	2.78	2.78	2.78	2.78	2.80	2.80	2.80	2.80
	0	TC	12.38	12.39	12.50	12.62	13.06	13.34	13.34	13.34	13.41	13.41	13.41	13.41	14.31	14.31	14.31	14.31
		S/T	0.72	0.80	0.88	0.97	0.57	0.65	0.74	0.82	0.51	0.59	0.67	0.74	0.35	0.43	0.50	0.58
		PI	2.80	2.80	2.80	2.80	2.80	2.80	2.80	2.80	2.80	2.80	2.80	2.80	2.81	2.81	2.81	2.81
	5	TC	12.31	12.32	12.44	12.56	13.02	13.28	13.28	13.28	13.37	13.37	13.37	13.37	14.30	14.30	14.30	14.30
		S/T	0.72	0.81	0.89	0.98	0.57	0.66	0.74	0.83	0.51	0.59	0.67	0.75	0.35	0.43	0.50	0.58
		PI	2.82	2.82	2.82	2.82	2.82	2.82	2.82	2.82	2.82	2.82	2.82	2.82	2.83	2.83	2.83	2.83
	10	TC	12.24	12.25	12.37	12.48	12.95	13.22	13.22	13.22	13.31	13.31	13.31	13.31	14.26	14.26	14.26	14.26
		S/T	0.72	0.81	0.89	0.98	0.57	0.66	0.74	0.83	0.51	0.59	0.67	0.75	0.36	0.44	0.50	0.58
		PI	2.87	2.87	2.87	2.87	2.86	2.86	2.86	2.86	2.86	2.86	2.86	2.86	2.86	2.86	2.86	2.86
	15	TC	12.14	12.15	12.27	12.38	12.87	13.13	13.13	13.13	13.23	13.23	13.23	13.23	14.20	14.20	14.20	14.20
		S/T	0.73	0.82	0.90	0.99	0.58	0.66	0.75	0.84	0.52	0.60	0.68	0.76	0.36	0.44	0.51	0.59
		PI	2.94	2.94	2.94	2.94	2.93	2.93	2.93	2.93	2.92	2.92	2.92	2.92	2.92	2.92	2.92	2.92
	20	TC	12.00	12.01	12.13	12.24	12.73	12.73	12.73	12.73	13.10	13.10	13.10	13.10	14.08	14.08	14.08	14.08
		S/T	0.73	0.82	0.90	0.99	0.58	0.67	0.75	0.84	0.52	0.60	0.68	0.76	0.36	0.44	0.51	0.59
		PI	3.04	3.04	3.04	3.04	3.03	3.03	3.03	3.03	3.02	3.02	3.02	3.02	3.01	3.01	3.01	3.01
	25	TC	11.44	11.44	11.55	11.67	12.16	12.16	12.16	12.16	12.53	12.53	12.53	12.53	13.48	13.48	13.48	13.48
		S/T	0.74	0.83	0.92	1.00	0.59	0.67	0.76	0.85	0.52	0.60	0.69	0.77	0.36	0.44	0.52	0.60
		PI	3.35	3.35	3.35	3.35	3.35	3.35	3.35	3.35	3.35	3.35	3.35	3.35	3.35	3.35	3.35	3.35
	30	TC	10.92	10.92	11.03	11.15	11.61	11.61	11.61	11.61	11.95	11.95	11.95	11.95	12.87	12.87	12.87	12.87
		S/T	0.75	0.84	0.94	1.00	0.59	0.68	0.78	0.87	0.52	0.61	0.70	0.79	0.35	0.44	0.52	0.60
		PI	3.67	3.67	3.67	3.67	3.68	3.68	3.68	3.68	3.68	3.68	3.68	3.68	3.70	3.70	3.70	3.70
	35	TC	10.37	10.37	10.49	10.60	11.03	11.03	11.03	11.15	11.38	11.38	11.55	11.38	12.27	12.27	12.27	12.27
		S/T	0.76	0.86	0.96	1.00	0.60	0.69	0.79	0.88	0.52	0.62	0.71	0.81	0.35	0.44	0.52	0.61
		PI	4.01	4.01	4.01	4.01	4.03	4.03	4.03	4.03	4.03	4.03	4.04	4.03	4.06	4.06	4.06	4.06
	40	TC	9.68	9.71	9.82	9.92	10.32	10.32	10.32	10.42	10.65	10.65	10.74	10.65	11.49	11.49	11.49	11.49
		S/T	0.78	0.89	1.00	1.00	0.61	0.72	0.82	0.92	0.53	0.63	0.74	0.84	0.34	0.44	0.54	0.63
		PI	4.43	4.43	4.43	4.43	4.44	4.44	4.44	4.44	4.45	4.45	4.46	4.45	4.49	4.49	4.49	4.49
	46	TC	8.95	9.03	9.12	9.20	9.57	9.57	9.57	9.66	9.89	9.89	9.89	9.89	10.68	10.68	10.68	10.68
		S/T	0.80	0.91	1.00	1.00	0.62	0.73	0.84	0.94	0.53	0.64	0.75	0.86	0.34	0.44	0.54	0.64
		PI	4.92	4.92	4.92	4.92	4.94	4.94	4.94	4.94	4.96	4.96	4.96	4.96	5.00	5.00	5.00	5.00
	50	TC	8.40	8.49	8.57	8.66	8.97	8.97	8.97	9.06	9.29	9.29	9.29	9.29	10.06	10.06	10.06	10.06
		S/T	0.82	0.94	1.00	1.00	0.63	0.74	0.86	0.98	0.54	0.65	0.77	0.88	0.34	0.44	0.55	0.66
		PI	5.33	5.33	5.33	5.33	5.35	5.35	5.35	5.35	5.36	5.36	5.36	5.36	5.41	5.41	5.41	5.41
1750	-15	TC	12.84	12.84	12.96	13.08	13.51	13.51	13.51	13.51	13.84	13.84	13.84	13.84	14.71	14.71	14.71	14.71
		S/T	0.71	0.81	0.98	1.00	0.57	0.66	0.74	0.83	0.50	0.59	0.67	0.75	0.35	0.42	0.50	0.58
		PI	2.86	2.86	2.86	2.86	2.85	2.85	2.85	2.85	2.85	2.85	2.85	2.85	2.84	2.84	2.84	2.84
	-10	TC	12.77	12.77	12.89	13.01	13.44	13.44	13.44	13.44	13.77	13.77	13.77	13.77	14.66	14.66	14.66	14.66
		S/T	0.72	0.82	0.99	1.00	0.57	0.66	0.75	0.83	0.50	0.59	0.67	0.76	0.35	0.43	0.50	0.58
		PI	2.84	2.84	2.84	2.84	2.84	2.84	2.84	2.84	2.84	2.84	2.84	2.84	2.85	2.85	2.85	2.85
	-5	TC	12.69	12.69	12.81	12.93	13.39	13.39	13.39	13.39	13.72	13.72	13.72	13.72	14.62	14.62	14.62	14.62
		S/T	0.72	0.82	0.99	1.00	0.58	0.66	0.75	0.84	0.51	0.59	0.67	0.76	0.35	0.43	0.51	0.59
		PI	2.84	2.84	2.84	2.84	2.84	2.84	2.84	2.84	2.84	2.84	2.84	2.84	2.85	2.85	2.85	2.85
	0	TC	12.63	12.63	12.75	12.86	13.34	13.34	13.34	13.34	13.68	13.68	13.68	13.68	14.61	14.61	14.61	14.61
		S/T	0.73	0.82	1.00	1.00	0.58	0.67	0.75	0.84	0.51	0.60	0.68	0.76	0.35	0.43	0.51	0.59
		PI	2.85	2.85	2.85	2.85	2.85	2.85	2.85	2.85	2.85	2.85	2.85	2.85	2.86	2.86	2.86	2.86
	5	TC	12.56	12.56	12.68	12.80	13.28	13.28	13.28	13.28	13.64	13.64	13.64	13.64	14.60	14.60	14.60	14.60
		S/T	0.73	0.83	1.00	1.00	0.58	0.67	0.76	0.85	0.51	0.60	0.68	0.77	0.35	0.43	0.51	0.59
		PI	2.88	2.88	2.88	2.88	2.88	2.88	2.88	2.88	2.87	2.87	2.87	2.87	2.88	2.88	2.88	2.88
	10	TC	12.49	12.49	12.60	12.72	13.22	13.22	13.22	13.22	13.58	13.58	13.58	13.58	14.56	14.56	14.56	14.56
		S/T	0.73	0.83	1.00	1.00	0.58	0.67	0.76	0.85	0.51	0.60	0.68	0.77	0.36	0.44	0.51	0.59
		PI	2.93	2.93	2.93	2.93	2.92	2.92	2.92	2.92	2.92	2.92	2.92	2.92	2.92	2.92	2.92	2.92
	15	TC	12.39	12.39	12.50	12.62	13.13	13.13	13.13	13.13	13.50	13.50	13.50	13.50	14.50	14.50	14.50	14.50
		S/T	0.74	0.84	0.93	1.00	0.59	0.68	0.77	0.86	0.52	0.61	0.69	0.78	0.36	0.44	0.52	0.60
		PI	3.00	3.00	3.00	3.00	2.99	2.99	2.99	2.99	2.98	2.98	2.98	2.98	2.98	2.98	2.98	2.98
	20	TC	12.25	12.25	12.36	12.48	12.99	12.99	12.99	12.99	13.37	13.37	13.37	13.37	14.37	14.37	14.37	14.37
		S/T	0.74	0.84	0.93	1.00	0.59	0.68	0.77	0.86	0.52	0.61	0.69	0.78	0.36	0.44	0.52	0.60
		PI	3.10	3.10	3.10	3.10	3.09	3.09	3.09	3.09	3.08	3.08	3.08	3.08	3.07	3.07	3.07	3.07
	25	TC	11.67	11.67	11.79	11.90	12.42	12.42	12.42	12.42	12.79	12.79	12.79	12.79	13.74	13.74	13.74	13.74
		S/T	0.75	0.85	0.95	1.00	0.59	0.69	0.78	0.88	0.52	0.61	0.70	0.80	0.35	0.44	0.52	0.61
		PI	3.41	3.41	3.41	3.41	3.41	3.41	3.41	3.41	3.41	3.41	3.41	3.41	3.41	3.41	3.41	3.41
	30	TC	11.13	11.13	11.24	11.36	11.84	11.84	11.84	11.96	12.19	12.19	12.19	12.19	13.14	13.14	13.14	13.14
		S/T	0.76	0.87	0.97	1.00	0.60	0.70	0.80	0.89	0.52	0.62	0.72	0.81	0.35	0.44	0.53	0.62
		PI	3.74	3.74	3.74	3.74	3.75	3.75	3.75	3.75	3.76	3.76	3.76	3.76	3.77	3.77	3.77	3.77
	35	TC	10.58	10.69	10.81	10.92	11.27	11.27	11.27	11.38	11.61	11.61	11.79	11.61	12.53	12.53	12.53	12.53
		S/T	0.78	0.88	0.99	1.00	0.61	0.71	0.81	0.91	0.53	0.63	0.72	0.83	0.35	0.44	0.53	0.63
		PI	4.09	4.09	4.09	4.09	4.11	4.11	4.11	4.11	4.11	4.11	4.12	4.11	4.11	4.11	4.11	4.11
	40	TC	9.96	10.07	10.17	10.27	10.61	10.61	10.61	10.72	10.95	10.95	11.04	11.00	11.84	11.84	11.84	11.84
		S/T	0.81	0.92	1.00	1.00	0.62	0.73	0.85	0.96	0.53	0.65	0.76	0.87	0.34	0.44	0.54	0.65
		PI	4.52	4.52	4.52	4.52	4.54	4.54	4.54	4.54	4.55	4.55	4.56	4.55	4.57	4.57	4.57	4.57
	46	TC	9.23	9.31	9.40	9.49	9.83	9.83	9.83	9.92	10.15	10.15	10.15	10.26	11.01	11.01	11.01	11.01
		S/T	0.82	0.94	1.00	1.00	0.63	0.75	0.87	0.98	0.54	0.65	0.77	0.88	0.34	0.44	0.55	0.66
		PI	5.03	5.03	5.03	5.03	5.05	5.05	5.05	5.05	5.07	5.07	5.07	5.07	5.11	5.11	5.11	5.11
	50	TC	8.65	8.74	8.82	8.91	9.26	9.26	9.34	9.43	9.54	9.54	9.54	9.63	10.35	10.35	10.35	10.35
		S/T	0.84	0.97	1.00	1.00	0.64	0.76	0.89	1.00	0.55	0.67	0.79	0.91	0.33	0.45	0.56	0.91
		PI	5.45	5.45	5.45	5.45	5.47	5.47	5.47	5.47	5.48	5.48	5.48	5.48	5.53	5.53	5.53	5.53

1900	-15	TC	13.08	13.08	13.20	13.33	13.78	13.78	13.78	13.78	14.11	14.11	14.11	14.11	14.97	14.97	14.97	14.97
		S/T	0.73	0.83	1.00	1.00	0.58	0.67	0.76	0.98	0.50	0.60	0.69	0.77	0.34	0.42	0.50	0.59
		PI	2.91	2.91	2.91	2.91	2.91	2.91	2.91	2.91	2.90	2.90	2.90	2.90	2.90	2.90	2.90	2.90
	-10	TC	13.01	13.01	13.13	13.25	13.70	13.70	13.70	13.70	14.04	14.04	14.04	14.04	14.92	14.92	14.92	14.92
		S/T	0.74	0.83	1.00	1.00	0.58	0.67	0.77	0.98	0.50	0.60	0.69	0.78	0.34	0.43	0.50	0.59
		PI	2.90	2.90	2.90	2.90	2.90	2.90	2.90	2.90	2.89	2.89	2.89	2.89	2.90	2.90	2.90	2.90
	-5	TC	12.93	12.93	13.05	13.17	13.65	13.65	13.65	13.65	13.99	13.99	13.99	13.99	14.89	14.89	14.89	14.89
		S/T	0.74	0.84	1.00	1.00	0.59	0.67	0.77	0.99	0.51	0.60	0.69	0.78	0.34	0.43	0.51	0.59
		PI	2.89	2.89	2.89	2.89	2.89	2.89	2.89	2.89	2.89	2.89	2.89	2.89	2.91	2.91	2.91	2.91
	0	TC	12.86	12.86	12.98	13.10	13.60	13.60	13.60	13.60	13.95	13.95	13.95	13.95	14.87	14.87	14.87	14.87
		S/T	0.74	0.84	1.00	1.00	0.59	0.68	0.77	0.99	0.51	0.61	0.70	0.78	0.34	0.43	0.51	0.60
		PI	2.90	2.90	2.90	2.90	2.91	2.91	2.91	2.91	2.91	2.91	2.91	2.91	2.92	2.92	2.92	2.92
	5	TC	12.80	12.80	12.92	13.04	13.55	13.55	13.55	13.55	13.90	13.90	13.90	13.90	14.86	14.86	14.86	14.86
		S/T	0.75	0.85	1.00	1.00	0.59	0.68	0.78	1.00	0.51	0.61	0.70	0.79	0.34	0.43	0.51	0.60
		PI	2.93	2.93	2.93	2.93	2.93	2.93	2.93	2.93	2.93	2.93	2.93	2.93	2.94	2.94	2.94	2.94
	10	TC	12.72	12.72	12.84	12.96	13.48	13.48	13.48	13.48	13.85	13.85	13.85	13.85	14.82	14.82	14.82	14.82
		S/T	0.75	0.85	1.00	1.00	0.59	0.68	0.78	1.00	0.51	0.61	0.70	0.79	0.35	0.44	0.51	0.60
		PI	2.98	2.98	2.98	2.98	2.98	2.98	2.98	2.98	2.97	2.97	2.97	2.97	2.98	2.98	2.98	2.98
	15	TC	12.62	12.62	12.73	12.85	13.39	13.39	13.39	13.39	13.76	13.76	13.76	13.76	14.76	14.76	14.76	14.76
		S/T	0.76	0.86	0.96	1.00	0.60	0.69	0.79	0.88	0.52	0.62	0.71	0.80	0.35	0.44	0.52	0.61
		PI	3.05	3.05	3.05	3.05	3.05	3.05	3.05	3.05	3.04	3.04	3.04	3.04	3.04	3.04	3.04	3.04
	20	TC	12.48	12.48	12.59	12.71	13.25	13.25	13.25	13.25	13.63	13.63	13.63	13.63	14.63	14.63	14.63	14.63
		S/T	0.76	0.86	0.96	1.00	0.60	0.69	0.79	0.88	0.52	0.62	0.71	0.80	0.35	0.44	0.52	0.61
		PI	3.16	3.16	3.16	3.16	3.15	3.15	3.15	3.15	3.14	3.14	3.14	3.14	3.13	3.13	3.13	3.13
	25	TC	11.90	11.90	12.02	12.13	12.65	12.65	12.65	12.76	13.02	13.02	13.02	13.02	14.03	14.03	14.03	14.03
		S/T	0.77	0.87	0.98	1.00	0.60	0.70	0.80	0.90	0.52	0.62	0.72	0.82	0.35	0.44	0.53	0.62
		PI	3.48	3.48	3.48	3.48	3.48	3.48	3.48	3.48	3.48	3.48	3.48	3.48	3.48	3.48	3.48	3.48
	30	TC	11.36	11.47	11.59	11.70	12.07	12.07	12.07	12.19	12.45	12.45	12.45	12.45	13.40	13.40	13.40	13.40
		S/T	0.78	0.89	0.99	1.00	0.61	0.71	0.82	0.92	0.53	0.63	0.73	0.84	0.34	0.44	0.53	0.63
		PI	3.82	3.82	3.82	3.82	3.82	3.82	3.82	3.82	3.83	3.83	3.83	3.83	3.85	3.85	3.85	3.85
	35	TC	10.78	10.90	11.01	11.13	11.47	11.47	11.47	11.59	11.84	11.84	**12.02**	11.84	12.76	12.76	12.76	12.76
		S/T	0.79	0.91	1.00	1.00	0.62	0.73	0.84	0.94	0.53	0.64	**0.74**	0.86	0.34	0.44	0.54	0.64
		PI	4.17	4.17	4.17	4.17	4.19	4.19	4.19	4.19	4.19	4.19	**4.20**	4.19	4.22	4.22	4.22	4.22
	40	TC	10.15	10.25	10.36	10.46	10.82	10.82	10.86	10.97	11.16	11.16	11.26	11.22	12.06	12.06	12.06	12.06
		S/T	0.83	0.95	1.00	1.00	0.63	0.75	0.87	0.99	0.54	0.66	0.78	0.89	0.34	0.44	0.55	0.90
		PI	4.61	4.61	4.61	4.61	4.63	4.63	4.63	4.63	4.63	4.63	4.64	4.63	4.67	4.67	4.67	4.67
	46	TC	9.40	9.49	9.57	9.66	10.03	10.03	10.12	10.23	10.35	10.35	10.35	10.46	11.21	11.21	11.21	11.21
		S/T	0.84	0.97	1.00	1.00	0.64	0.77	0.89	1.00	0.55	0.67	0.79	0.91	0.33	0.45	0.56	0.92
		PI	5.13	5.13	5.13	5.13	5.15	5.15	5.15	5.15	5.16	5.16	5.16	5.16	5.21	5.21	5.21	5.21
	50	TC	8.82	8.91	9.00	9.08	9.43	9.43	9.51	9.60	9.74	9.74	9.74	9.83	10.58	10.58	10.58	10.58
		S/T	0.86	1.00	1.00	1.00	0.65	0.79	0.92	1.00	0.55	0.68	0.81	0.94	0.33	0.45	0.57	0.97
		PI	5.55	5.55	5.55	5.55	5.57	5.57	5.57	5.57	5.59	5.59	5.59	5.59	5.63	5.63	5.63	5.63

TC:Total Cooling Capacity (kW)

S/T:Sensible Cooling Capacity Ratio

PI:Power Input(kW)

Note: The table shows the case where the operation frequency of a compressor is fixed.

48k																		
INDOOR AIRFLOW (CMH)	OUTDOOR DB(℃)	ID WB (℃)	16.0				18.0				19.0				22.0			
		ID DB (℃)	23.0	25.0	27.0	29.0	23.0	25.0	27.0	29.0	23.0	25.0	27.0	29.0	23.0	25.0	27.0	29.0
1600	-15	TC	14.70	14.69	14.69	14.84	15.46	15.79	15.79	15.79	15.84	15.84	15.84	15.84	16.83	16.83	16.83	16.83
		S/T	0.68	0.75	0.82	0.90	0.55	0.62	0.70	0.76	0.49	0.56	0.63	0.70	0.36	0.42	0.48	0.55
		PI	3.10	3.10	3.10	3.10	3.09	3.09	3.09	3.09	3.09	3.09	3.09	3.09	3.09	3.09	3.09	3.09
	-10	TC	14.61	14.60	14.60	14.75	15.37	15.71	15.71	15.71	15.76	15.76	15.76	15.76	16.77	16.77	16.77	16.77
		S/T	0.68	0.76	0.82	0.90	0.55	0.62	0.70	0.77	0.49	0.56	0.63	0.70	0.36	0.43	0.49	0.55
		PI	3.09	3.08	3.08	3.09	3.09	3.09	3.09	3.09	3.08	3.08	3.08	3.08	3.09	3.09	3.09	3.09
	-5	TC	14.52	14.51	14.51	14.66	15.31	15.65	15.65	15.65	15.70	15.70	15.70	15.70	16.73	16.73	16.73	16.73
		S/T	0.68	0.76	0.83	0.91	0.56	0.63	0.70	0.77	0.50	0.57	0.63	0.70	0.36	0.43	0.49	0.56
		PI	3.08	3.08	3.08	3.08	3.08	3.08	3.08	3.08	3.08	3.08	3.08	3.08	3.09	3.09	3.09	3.09
	0	TC	14.45	14.44	14.44	14.59	15.26	15.59	15.59	15.59	15.66	15.66	15.66	15.66	16.71	16.71	16.71	16.71
		S/T	0.69	0.76	0.83	0.91	0.56	0.63	0.71	0.77	0.50	0.57	0.64	0.71	0.36	0.43	0.49	0.56
		PI	3.09	3.09	3.09	3.09	3.09	3.09	3.09	3.09	3.09	3.09	3.09	3.09	3.11	3.11	3.11	3.11
	5	TC	14.38	14.37	14.37	14.51	15.20	15.53	15.53	15.53	15.61	15.61	15.61	15.61	16.70	16.70	16.70	16.70
		S/T	0.69	0.77	0.84	0.92	0.56	0.63	0.71	0.78	0.50	0.57	0.64	0.71	0.36	0.43	0.49	0.56
		PI	3.12	3.12	3.12	3.12	3.12	3.12	3.12	3.12	3.12	3.12	3.12	3.12	3.13	3.13	3.13	3.13
	10	TC	14.29	14.28	14.28	14.43	15.13	15.45	15.45	15.45	15.54	15.54	15.54	15.54	16.66	16.66	16.66	16.66
		S/T	0.69	0.77	0.84	0.92	0.56	0.64	0.71	0.78	0.50	0.57	0.64	0.71	0.37	0.44	0.50	0.56
		PI	3.17	3.17	3.17	3.17	3.17	3.17	3.17	3.17	3.17	3.17	3.17	3.17	3.17	3.17	3.17	3.17
	15	TC	14.18	14.16	14.16	14.31	15.02	15.35	15.35	15.35	15.45	15.45	15.45	15.45	16.59	16.59	16.59	16.59
		S/T	0.70	0.78	0.85	0.93	0.57	0.64	0.72	0.79	0.51	0.58	0.65	0.72	0.37	0.44	0.50	0.57
		PI	3.25	3.25	3.25	3.25	3.24	3.24	3.24	3.24	3.24	3.24	3.24	3.24	3.24	3.24	3.24	3.24
	20	TC	14.02	14.00	14.00	14.15	14.87	14.87	14.87	14.87	15.30	15.30	15.30	15.30	16.44	16.44	16.44	16.44
		S/T	0.70	0.78	0.85	0.93	0.57	0.64	0.72	0.79	0.51	0.58	0.65	0.72	0.37	0.44	0.50	0.57
		PI	3.37	3.36	3.36	3.37	3.35	3.35	3.35	3.35	3.34	3.34	3.34	3.34	3.33	3.33	3.33	3.33
	25	TC	13.37	13.37	13.37	13.52	14.21	14.21	14.21	14.21	14.64	14.64	14.64	14.64	15.73	15.73	15.73	15.73
		S/T	0.71	0.79	0.87	0.94	0.57	0.65	0.73	0.80	0.51	0.59	0.66	0.73	0.37	0.44	0.51	0.57
		PI	3.71	3.71	3.71	3.71	3.71	3.71	3.71	3.71	3.71	3.71	3.71	3.71	3.71	3.71	3.71	3.71
	30	TC	12.74	12.74	12.74	12.86	13.55	13.55	13.55	13.55	13.95	13.95	13.95	13.95	15.04	15.04	15.04	15.04
		S/T	0.72	0.80	0.88	0.96	0.58	0.66	0.74	0.81	0.51	0.59	0.67	0.74	0.37	0.44	0.51	0.58
		PI	4.06	4.06	4.06	4.06	4.07	4.07	4.07	4.07	4.07	4.07	4.07	4.07	4.09	4.09	4.09	4.09
	35	TC	12.11	12.11	12.23	12.34	12.89	12.89	12.89	12.89	13.29	13.29	13.49	13.29	14.32	14.32	14.32	14.32
		S/T	0.72	0.81	0.90	0.98	0.58	0.66	0.75	0.83	0.51	0.60	0.67	0.76	0.36	0.44	0.51	0.59
		PI	4.44	4.44	4.44	4.44	4.45	4.45	4.45	4.45	4.46	4.46	4.47	4.46	4.49	4.49	4.49	4.49
	40	TC	11.40	11.40	11.51	11.62	12.13	12.13	12.13	12.13	12.52	12.52	12.63	12.52	13.52	13.52	13.52	13.52
		S/T	0.74	0.84	0.94	1.00	0.59	0.68	0.77	0.86	0.52	0.61	0.70	0.78	0.35	0.44	0.52	0.60
		PI	4.90	4.90	4.90	4.90	4.92	4.92	4.92	4.92	4.93	4.93	4.94	4.93	4.96	4.96	4.96	4.96
	46	TC	10.55	10.55	10.67	10.78	11.24	11.24	11.24	11.24	11.61	11.61	11.61	11.61	12.59	12.59	12.59	12.59
		S/T	0.75	0.86	0.95	1.00	0.59	0.69	0.79	0.88	0.52	0.61	0.71	0.80	0.35	0.44	0.52	0.61
		PI	5.45	5.45	5.45	5.45	5.47	5.47	5.47	5.47	5.49	5.49	5.49	5.49	5.53	5.53	5.53	5.53
	50	TC	9.89	9.89	9.98	10.06	10.58	10.58	10.58	10.69	10.92	10.92	10.92	10.92	11.84	11.84	11.84	11.84
		S/T	0.77	0.88	0.98	1.00	0.60	0.70	0.80	0.90	0.52	0.62	0.72	0.82	0.35	0.44	0.53	0.62
		PI	5.90	5.90	5.90	5.90	5.92	5.92	5.92	5.92	5.94	5.94	5.94	5.94	5.99	5.99	5.99	5.99
1750	-15	TC	15.02	15.02	15.02	15.17	15.79	15.79	15.79	15.79	16.17	16.17	16.17	16.17	17.19	17.19	17.19	17.19
		S/T	0.69	0.76	0.98	1.00	0.56	0.63	0.70	0.78	0.49	0.57	0.64	0.71	0.36	0.42	0.49	0.56
		PI	3.16	3.16	3.16	3.16	3.16	3.16	3.16	3.16	3.15	3.15	3.15	3.15	3.14	3.14	3.14	3.14
	-10	TC	14.94	14.94	14.94	15.08	15.71	15.71	15.71	15.71	16.09	16.09	16.09	16.09	17.13	17.13	17.13	17.13
		S/T	0.69	0.77	0.99	1.00	0.56	0.63	0.71	0.79	0.49	0.57	0.64	0.72	0.36	0.43	0.49	0.56
		PI	3.15	3.15	3.15	3.15	3.15	3.15	3.15	3.15	3.15	3.15	3.15	3.15	3.15	3.15	3.15	3.15
	-5	TC	14.85	14.85	14.85	14.99	15.65	15.65	15.65	15.65	16.03	16.03	16.03	16.03	17.09	17.09	17.09	17.09
		S/T	0.69	0.77	0.99	1.00	0.57	0.63	0.71	0.79	0.50	0.58	0.64	0.72	0.36	0.43	0.50	0.57
		PI	3.14	3.14	3.14	3.14	3.15	3.15	3.15	3.15	3.15	3.15	3.15	3.15	3.15	3.15	3.15	3.15
	0	TC	14.77	14.77	14.77	14.92	15.59	15.59	15.59	15.59	15.99	15.99	15.99	15.99	17.07	17.07	17.07	17.07
		S/T	0.70	0.77	1.00	1.00	0.57	0.64	0.72	0.79	0.50	0.58	0.65	0.73	0.36	0.43	0.50	0.57
		PI	3.16	3.16	3.16	3.16	3.16	3.16	3.16	3.16	3.16	3.16	3.16	3.16	3.16	3.16	3.16	3.16
	5	TC	14.70	14.70	14.70	14.84	15.53	15.53	15.53	15.53	15.94	15.94	15.94	15.94	17.06	17.06	17.06	17.06
		S/T	0.70	0.78	1.00	1.00	0.57	0.64	0.72	0.80	0.50	0.58	0.65	0.73	0.36	0.43	0.50	0.57
		PI	3.19	3.19	3.19	3.19	3.19	3.19	3.19	3.19	3.18	3.18	3.18	3.18	3.19	3.19	3.19	3.19
	10	TC	14.61	14.61	14.61	14.75	15.45	15.45	15.45	15.45	15.87	15.87	15.87	15.87	17.01	17.01	17.01	17.01
		S/T	0.70	0.78	1.00	1.00	0.57	0.64	0.72	0.80	0.50	0.58	0.65	0.73	0.37	0.44	0.50	0.57
		PI	3.24	3.24	3.24	3.24	3.23	3.23	3.23	3.23	3.23	3.23	3.23	3.23	3.23	3.23	3.23	3.23
	15	TC	14.49	14.49	14.49	14.63	15.35	15.35	15.35	15.35	15.77	15.77	15.77	15.77	16.94	16.94	16.94	16.94
		S/T	0.71	0.79	0.87	0.95	0.58	0.65	0.73	0.81	0.51	0.59	0.66	0.74	0.37	0.44	0.51	0.58
		PI	3.32	3.32	3.32	3.32	3.31	3.31	3.31	3.31	3.31	3.31	3.31	3.31	3.30	3.30	3.30	3.30
	20	TC	14.33	14.33	14.33	14.47	15.19	15.19	15.19	15.19	15.62	15.62	15.62	15.62	16.80	16.80	16.80	16.80
		S/T	0.71	0.79	0.87	0.95	0.58	0.65	0.73	0.81	0.51	0.59	0.66	0.74	0.37	0.44	0.51	0.58
		PI	3.43	3.43	3.43	3.43	3.42	3.42	3.42	3.42	3.41	3.41	3.41	3.41	3.39	3.39	3.39	3.39
	25	TC	13.67	13.67	13.81	13.95	14.50	14.50	14.50	14.50	14.93	14.93	14.93	14.93	16.08	16.08	16.08	16.08
		S/T	0.72	0.80	0.89	0.97	0.58	0.66	0.74	0.82	0.51	0.59	0.67	0.75	0.36	0.44	0.51	0.58
		PI	3.79	3.79	3.79	3.79	3.78	3.78	3.78	3.78	3.78	3.78	3.78	3.78	3.79	3.79	3.79	3.79
	30	TC	13.01	13.01	13.15	13.29	13.84	13.84	13.84	13.84	14.27	14.27	14.27	14.27	15.36	15.36	15.36	15.36
		S/T	0.73	0.82	0.90	0.99	0.58	0.67	0.75	0.84	0.52	0.60	0.68	0.76	0.36	0.44	0.51	0.59
		PI	4.14	4.14	4.14	4.14	4.15	4.15	4.15	4.15	4.16	4.16	4.16	4.16	4.17	4.17	4.17	4.17
	35	TC	12.37	12.37	12.49	12.60	13.15	13.15	13.15	13.15	13.58	13.58	13.78	13.58	14.64	14.64	14.64	14.64
		S/T	0.74	0.83	0.92	1.00	0.59	0.68	0.77	0.86	0.52	0.60	0.69	0.78	0.36	0.44	0.52	0.60
		PI	4.53	4.53	4.53	4.53	4.54	4.54	4.54	4.54	4.55	4.55	4.56	4.55	4.55	4.55	4.55	4.55
	40	TC	11.66	11.66	11.78	11.89	12.42	12.42	12.42	12.48	12.83	12.83	12.94	12.83	13.85	13.85	13.85	13.85
		S/T	0.76	0.86	0.96	1.00	0.60	0.70	0.79	0.89	0.52	0.62	0.71	0.81	0.35	0.44	0.52	0.61
		PI	5.00	5.00	5.00	5.00	5.02	5.02	5.02	5.02	5.03	5.03	5.03	5.03	5.05	5.05	5.05	5.05
	46	TC	10.78	10.78	10.90	11.01	11.53	11.53	11.53	11.64	11.90	11.90	11.90	11.90	12.88	12.88	12.88	12.88
		S/T	0.77	0.88	0.98	1.00	0.60	0.70	0.81	0.90	0.53	0.62	0.72	0.82	0.35	0.44	0.53	0.62
		PI	5.56	5.56	5.56	5.56	5.58	5.58	5.58	5.58	5.60	5.60	5.60	5.60	5.64	5.64	5.64	5.64
	50	TC	10.12	10.24	10.35	10.47	10.84	10.84	10.84	10.95	11.18	11.18	11.18	11.18	12.13	12.13	12.13	12.13
		S/T	0.79	0.90	1.00	1.00	0.61	0.72	0.83	0.93	0.53	0.63	0.74	0.84	0.34	0.44	0.54	0.91
		PI	6.02	6.02	6.02	6.02	6.04	6.04	6.04	6.04	6.06	6.06	6.06	6.06	6.11	6.11	6.11	6.11

1900	-15	TC	15.33	15.33	15.48	15.63	16.12	16.12	16.12	16.12	16.53	16.53	16.53	16.53	17.54	17.54	17.54	17.54
		S/T	0.70	0.78	1.00	1.00	0.56	0.64	0.71	0.98	0.49	0.57	0.65	0.72	0.35	0.42	0.49	0.56
		PI	3.23	3.23	3.23	3.23	3.21	3.21	3.21	3.21	3.22	3.22	3.22	3.22	3.21	3.21	3.21	3.21
	-10	TC	15.23	15.23	15.38	15.53	16.03	16.03	16.03	16.03	16.45	16.45	16.45	16.45	17.48	17.48	17.48	17.48
		S/T	0.70	0.79	1.00	1.00	0.56	0.64	0.72	0.98	0.49	0.57	0.65	0.73	0.35	0.43	0.49	0.56
		PI	3.21	3.21	3.21	3.21	3.20	3.20	3.20	3.20	3.21	3.21	3.21	3.21	3.21	3.21	3.21	3.21
	-5	TC	15.14	15.14	15.29	15.44	15.97	15.97	15.97	15.97	16.38	16.38	16.38	16.38	17.44	17.44	17.44	17.44
		S/T	0.70	0.79	1.00	1.00	0.57	0.64	0.72	0.99	0.50	0.58	0.65	0.73	0.35	0.43	0.50	0.57
		PI	3.21	3.21	3.21	3.21	3.20	3.20	3.20	3.20	3.21	3.21	3.21	3.21	3.21	3.21	3.21	3.21
	0	TC	15.07	15.07	15.22	15.36	15.91	15.91	15.91	15.91	16.34	16.34	16.34	16.34	17.42	17.42	17.42	17.42
		S/T	0.71	0.79	1.00	1.00	0.57	0.65	0.73	0.99	0.50	0.58	0.66	0.74	0.35	0.43	0.50	0.57
		PI	3.22	3.22	3.22	3.22	3.21	3.21	3.21	3.21	3.22	3.22	3.22	3.22	3.23	3.23	3.23	3.23
	5	TC	14.99	14.99	15.14	15.29	15.85	15.85	15.85	15.85	16.29	16.29	16.29	16.29	17.41	17.41	17.41	17.41
		S/T	0.71	0.80	1.00	1.00	0.57	0.65	0.73	1.00	0.50	0.58	0.66	0.74	0.35	0.43	0.50	0.57
		PI	3.25	3.25	3.25	3.25	3.24	3.24	3.24	3.24	3.25	3.25	3.25	3.25	3.25	3.25	3.25	3.25
	10	TC	14.90	14.90	15.05	15.19	15.78	15.78	15.78	15.78	16.22	16.22	16.22	16.22	17.36	17.36	17.36	17.36
		S/T	0.71	0.80	1.00	1.00	0.57	0.65	0.73	1.00	0.50	0.58	0.66	0.74	0.36	0.44	0.50	0.57
		PI	3.30	3.30	3.30	3.30	3.29	3.29	3.29	3.29	3.30	3.30	3.30	3.30	3.29	3.29	3.29	3.29
	15	TC	14.78	14.78	14.93	15.07	15.67	15.67	15.67	15.67	16.12	16.12	16.12	16.12	17.29	17.29	17.29	17.29
		S/T	0.72	0.81	0.89	0.97	0.58	0.66	0.74	0.83	0.51	0.59	0.67	0.75	0.36	0.44	0.51	0.58
		PI	3.38	3.38	3.38	3.38	3.37	3.37	3.37	3.37	3.37	3.37	3.37	3.37	3.36	3.36	3.36	3.36
	20	TC	14.61	14.61	14.76	14.90	15.50	15.50	15.50	15.50	15.96	15.96	15.96	15.96	17.14	17.14	17.14	17.14
		S/T	0.72	0.81	0.89	0.97	0.58	0.66	0.74	0.83	0.51	0.59	0.67	0.75	0.36	0.44	0.51	0.58
		PI	3.50	3.50	3.50	3.50	3.48	3.48	3.48	3.48	3.48	3.48	3.48	3.48	3.46	3.46	3.46	3.46
	25	TC	13.95	13.95	14.10	14.24	14.81	14.81	14.81	14.81	15.25	15.25	15.25	15.25	16.42	16.42	16.42	16.42
		S/T	0.73	0.82	0.91	0.99	0.58	0.67	0.76	0.84	0.52	0.60	0.68	0.77	0.36	0.44	0.51	0.59
		PI	3.86	3.86	3.86	3.86	3.86	3.86	3.86	3.86	3.86	3.86	3.86	3.86	3.86	3.86	3.86	3.86
	30	TC	13.29	13.29	13.44	13.58	14.13	14.13	14.13	14.13	14.56	14.56	14.56	14.56	15.68	15.68	15.68	15.68
		S/T	0.74	0.84	0.93	1.00	0.59	0.68	0.77	0.86	0.52	0.61	0.69	0.78	0.36	0.44	0.52	0.60
		PI	4.22	4.22	4.22	4.22	4.23	4.23	4.23	4.23	4.24	4.24	4.24	4.24	4.26	4.26	4.26	4.26
	35	TC	12.63	12.63	12.75	12.86	13.44	13.44	13.44	13.44	13.87	13.87	**14.07**	13.87	14.96	14.96	14.96	14.96
		S/T	0.75	0.85	0.95	1.00	0.59	0.69	0.78	0.88	0.52	0.61	**0.70**	0.80	0.35	0.44	0.52	0.61
		PI	4.62	4.62	4.62	4.62	4.63	4.63	4.63	4.63	4.64	4.64	**4.65**	4.64	4.67	4.67	4.67	4.67
	40	TC	11.91	11.96	12.07	12.19	12.69	12.69	12.69	12.74	13.09	13.09	13.20	13.09	14.14	14.14	14.14	14.14
		S/T	0.78	0.88	0.99	1.00	0.61	0.71	0.81	0.91	0.53	0.63	0.73	0.83	0.35	0.44	0.53	0.90
		PI	5.10	5.10	5.10	5.10	5.11	5.11	5.11	5.11	5.13	5.13	5.13	5.13	5.17	5.17	5.17	5.17
	46	TC	11.01	11.13	11.24	11.36	11.76	11.76	11.76	11.87	12.13	12.13	12.13	12.13	13.14	13.14	13.14	13.14
		S/T	0.79	0.90	1.00	1.00	0.61	0.72	0.83	0.93	0.53	0.63	0.74	0.85	0.34	0.44	0.54	0.92
		PI	5.67	5.67	5.67	5.67	5.69	5.69	5.69	5.69	5.71	5.71	5.71	5.71	5.76	5.76	5.76	5.76
	50	TC	10.35	10.47	10.58	10.70	11.07	11.07	11.07	11.18	11.41	11.41	11.41	11.41	12.39	12.39	12.39	12.39
		S/T	0.81	0.93	1.00	1.00	0.62	0.74	0.85	0.96	0.54	0.65	0.76	0.87	0.34	0.44	0.55	0.97
		PI	6.14	6.14	6.14	6.14	6.16	6.16	6.16	6.16	6.18	6.18	6.18	6.18	6.23	6.23	6.23	6.23

TC:Total Cooling Capacity (kW)

S/T:Sensible Cooling Capacity Ratio

PI:Power Input(kW)

Note: The table shows the case where the operation frequency of a compressor is fixed.

55k																			
INDOOR AIRFLOW (CMH)	OUTDOOR DB(℃)	ID WB (℃)	16.0				18.0				19.0				22.0				
		ID DB (℃)	23.0	25.0	27.0	29.0	23.0	25.0	27.0	29.0	23.0	25.0	27.0	29.0	23.0	25.0	27.0	29.0	
1650	-15	TC	15.98	15.98	15.98	16.13	16.80	17.13	17.13	17.13	17.20	17.20	17.20	17.20	18.27	18.27	18.27	18.27	
		S/T	0.67	0.74	0.81	0.88	0.55	0.62	0.69	0.75	0.49	0.56	0.63	0.69	0.37	0.42	0.48	0.54	
		PI	3.33	3.33	3.33	3.33	3.32	3.32	3.32	3.32	3.32	3.32	3.32	3.32	3.31	3.31	3.31	3.31	
	-10	TC	15.88	15.88	15.88	16.03	16.71	17.04	17.04	17.04	17.12	17.12	17.12	17.12	18.21	18.21	18.21	18.21	
		S/T	0.67	0.75	0.82	0.88	0.55	0.62	0.69	0.76	0.49	0.56	0.63	0.69	0.37	0.43	0.49	0.54	
		PI	3.31	3.32	3.32	3.31	3.31	3.31	3.31	3.31	3.31	3.31	3.31	3.31	3.32	3.32	3.32	3.32	
	-5	TC	15.79	15.79	15.79	15.94	16.64	16.97	16.97	16.97	17.05	17.05	17.05	17.05	18.16	18.16	18.16	18.16	
		S/T	0.67	0.75	0.82	0.89	0.56	0.62	0.69	0.76	0.50	0.57	0.63	0.69	0.37	0.43	0.49	0.55	
		PI	3.31	3.31	3.31	3.31	3.31	3.31	3.31	3.31	3.31	3.31	3.31	3.31	3.32	3.32	3.32	3.32	
	0	TC	15.71	15.71	15.71	15.86	16.58	16.91	16.91	16.91	17.01	17.01	17.01	17.01	18.14	18.14	18.14	18.14	
		S/T	0.68	0.75	0.82	0.89	0.56	0.63	0.70	0.76	0.50	0.57	0.64	0.70	0.37	0.43	0.49	0.55	
		PI	3.32	3.32	3.32	3.32	3.32	3.32	3.32	3.32	3.33	3.33	3.33	3.33	3.33	3.33	3.33	3.33	
	5	TC	15.63	15.63	15.63	15.78	16.52	16.85	16.85	16.85	16.95	16.95	16.95	16.95	18.13	18.13	18.13	18.13	
		S/T	0.68	0.76	0.83	0.90	0.56	0.63	0.70	0.77	0.50	0.57	0.64	0.70	0.37	0.43	0.49	0.55	
		PI	3.35	3.35	3.35	3.35	3.35	3.35	3.35	3.35	3.35	3.35	3.35	3.35	3.36	3.36	3.36	3.36	
	10	TC	15.53	15.53	15.53	15.68	16.44	16.77	16.77	16.77	16.88	16.88	16.88	16.88	18.08	18.08	18.08	18.08	
		S/T	0.68	0.76	0.83	0.90	0.56	0.63	0.70	0.77	0.50	0.57	0.64	0.70	0.38	0.44	0.50	0.55	
		PI	3.41	3.41	3.41	3.41	3.40	3.40	3.40	3.40	3.40	3.40	3.40	3.40	3.40	3.40	3.40	3.40	
	15	TC	15.41	15.41	15.41	15.55	16.33	16.65	16.65	16.65	16.78	16.78	16.78	16.78	18.01	18.01	18.01	18.01	
		S/T	0.69	0.77	0.84	0.91	0.57	0.64	0.71	0.78	0.51	0.58	0.65	0.71	0.38	0.44	0.50	0.56	
		PI	3.49	3.49	3.49	3.49	3.48	3.48	3.48	3.48	3.48	3.48	3.48	3.48	3.47	3.47	3.47	3.47	
	20	TC	15.23	15.23	15.23	15.38	16.15	16.15	16.15	16.15	16.61	16.61	16.61	16.61	17.85	17.85	17.85	17.85	
		S/T	0.69	0.77	0.84	0.91	0.57	0.64	0.71	0.78	0.51	0.58	0.65	0.71	0.38	0.44	0.50	0.56	
		PI	3.61	3.62	3.62	3.61	3.60	3.60	3.60	3.60	3.60	3.60	3.60	3.60	3.58	3.58	3.58	3.58	
	25	TC	14.54	14.54	14.54	14.69	15.44	15.44	15.44	15.44	15.90	15.90	15.90	15.90	17.10	17.10	17.10	17.10	
		S/T	0.70	0.78	0.85	0.92	0.57	0.64	0.72	0.79	0.51	0.58	0.65	0.72	0.37	0.44	0.50	0.57	
		PI	3.98	3.98	3.98	3.98	3.98	3.98	3.98	3.98	3.98	3.98	3.98	3.98	3.98	3.98	3.98	3.98	
	30	TC	13.85	13.85	13.85	14.00	14.72	14.72	14.72	14.72	15.18	15.18	15.18	15.18	16.36	16.36	16.36	16.36	
		S/T	0.71	0.79	0.87	0.94	0.57	0.65	0.72	0.80	0.51	0.59	0.66	0.73	0.37	0.44	0.50	0.57	
		PI	4.36	4.36	4.36	4.36	4.37	4.37	4.37	4.37	4.37	4.37	4.37	4.37	4.39	4.39	4.39	4.39	
	35	TC	13.17	13.17	13.17	13.31	14.00	14.00	14.00	14.00	14.43	14.43	14.66	14.43	15.58	15.58	15.58	15.58	
		S/T	0.72	0.80	0.88	0.96	0.58	0.66	0.74	0.81	0.51	0.59	0.66	0.74	0.37	0.44	0.51	0.58	
		PI	4.77	4.77	4.77	4.77	4.78	4.78	4.78	4.78	4.79	4.79	4.80	4.79	4.82	4.82	4.82	4.82	
	40	TC	12.41	12.41	12.46	12.59	13.22	13.22	13.22	13.22	13.64	13.64	13.76	13.64	14.74	14.74	14.74	14.74	
		S/T	0.73	0.83	0.91	1.00	0.58	0.67	0.76	0.85	0.52	0.60	0.68	0.77	0.36	0.44	0.51	0.59	
		PI	5.26	5.26	5.26	5.26	5.27	5.27	5.27	5.27	5.28	5.28	5.29	5.28	5.32	5.32	5.32	5.32	
	46	TC	11.49	11.49	11.60	11.72	12.26	12.26	12.26	12.26	12.67	12.67	12.67	12.67	13.70	13.70	13.70	13.70	
		S/T	0.74	0.84	0.93	1.00	0.59	0.68	0.77	0.86	0.52	0.61	0.69	0.78	0.36	0.44	0.52	0.60	
		PI	5.84	5.84	5.84	5.84	5.87	5.87	5.87	5.87	5.88	5.88	5.88	5.88	5.93	5.93	5.93	5.93	
	50	TC	10.77	10.77	10.88	11.00	11.51	11.51	11.51	11.51	11.92	11.92	11.92	11.92	12.90	12.90	12.90	12.90	
		S/T	0.76	0.86	0.96	1.00	0.60	0.69	0.79	0.88	0.52	0.61	0.71	0.80	0.35	0.44	0.52	0.61	
		PI	6.33	6.33	6.33	6.33	6.35	6.35	6.35	6.35	6.37	6.37	6.37	6.37	6.42	6.42	6.42	6.42	
1850	-15	TC	16.28	16.28	16.28	16.43	17.13	17.13	17.13	17.13	17.57	17.57	17.57	17.57	18.66	18.66	18.66	18.66	
		S/T	0.69	0.76	0.98	1.00	0.55	0.63	0.70	0.77	0.49	0.57	0.64	0.70	0.36	0.42	0.48	0.55	
		PI	3.40	3.40	3.40	3.40	3.39	3.39	3.39	3.39	3.39	3.39	3.39	3.39	3.38	3.38	3.38	3.38	
	-10	TC	16.19	16.19	16.19	16.34	17.04	17.04	17.04	17.04	17.48	17.48	17.48	17.48	18.59	18.59	18.59	18.59	
		S/T	0.69	0.77	0.99	1.00	0.55	0.63	0.71	0.78	0.49	0.57	0.64	0.71	0.36	0.43	0.49	0.55	
		PI	3.38	3.38	3.38	3.38	3.38	3.38	3.38	3.38	3.38	3.38	3.38	3.38	3.38	3.38	3.38	3.38	
	-5	TC	16.09	16.09	16.09	16.24	16.97	16.97	16.97	16.97	17.41	17.41	17.41	17.41	18.55	18.55	18.55	18.55	
		S/T	0.69	0.77	0.99	1.00	0.56	0.63	0.71	0.78	0.50	0.58	0.64	0.71	0.36	0.43	0.49	0.56	
		PI	3.38	3.38	3.38	3.38	3.38	3.38	3.38	3.38	3.38	3.38	3.38	3.38	3.39	3.39	3.39	3.39	
	0	TC	16.01	16.01	16.01	16.16	16.91	16.91	16.91	16.91	17.37	17.37	17.37	17.37	18.53	18.53	18.53	18.53	
		S/T	0.70	0.77	1.00	1.00	0.56	0.64	0.72	0.78	0.50	0.58	0.65	0.72	0.36	0.43	0.49	0.56	
		PI	3.39	3.39	3.39	3.39	3.39	3.39	3.39	3.39	3.39	3.39	3.39	3.39	3.40	3.40	3.40	3.40	
	5	TC	15.93	15.93	15.93	16.08	16.85	16.85	16.85	16.85	17.31	17.31	17.31	17.31	18.52	18.52	18.52	18.52	
		S/T	0.70	0.78	1.00	1.00	0.56	0.64	0.72	0.79	0.50	0.58	0.65	0.72	0.36	0.43	0.49	0.56	
		PI	3.42	3.42	3.42	3.42	3.42	3.42	3.42	3.42	3.42	3.42	3.42	3.42	3.42	3.42	3.42	3.42	
	10	TC	15.83	15.83	15.83	15.98	16.77	16.77	16.77	16.77	17.24	17.24	17.24	17.24	18.47	18.47	18.47	18.47	
		S/T	0.70	0.78	1.00	1.00	0.56	0.64	0.72	0.79	0.50	0.58	0.65	0.72	0.37	0.44	0.50	0.56	
		PI	3.48	3.48	3.48	3.48	3.47	3.47	3.47	3.47	3.47	3.47	3.47	3.47	3.47	3.47	3.47	3.47	
	15	TC	15.70	15.70	15.70	15.85	16.65	16.65	16.65	16.65	17.13	17.13	17.13	17.13	18.39	18.39	18.39	18.39	
		S/T	0.71	0.79	0.87	0.94	0.57	0.65	0.73	0.80	0.51	0.59	0.66	0.73	0.37	0.44	0.50	0.57	
		PI	3.56	3.56	3.56	3.56	3.56	3.56	3.56	3.56	3.55	3.55	3.55	3.55	3.54	3.54	3.54	3.54	
	20	TC	15.53	15.53	15.53	15.67	16.48	16.48	16.48	16.48	16.97	16.97	16.97	16.97	18.23	18.23	18.23	18.23	
		S/T	0.71	0.79	0.87	0.94	0.57	0.65	0.73	0.80	0.51	0.59	0.66	0.73	0.37	0.44	0.50	0.57	
		PI	3.69	3.69	3.69	3.69	3.68	3.68	3.68	3.68	3.67	3.67	3.67	3.67	3.65	3.65	3.65	3.65	
	25	TC	14.81	14.81	14.81	14.95	15.73	15.73	15.73	15.73	16.22	16.22	16.22	16.22	17.45	17.45	17.45	17.45	
		S/T	0.71	0.80	0.88	0.96	0.58	0.66	0.74	0.81	0.51	0.59	0.67	0.74	0.37	0.44	0.51	0.58	
		PI	4.07	4.07	4.07	4.07	4.06	4.06	4.06	4.06	4.06	4.06	4.06	4.06	4.07	4.07	4.07	4.07	
	30	TC	14.12	14.12	14.26	14.41	15.01	15.01	15.01	15.01	15.47	15.47	15.47	15.47	16.68	16.68	16.68	16.68	
		S/T	0.72	0.81	0.90	0.98	0.58	0.66	0.75	0.83	0.51	0.59	0.67	0.76	0.36	0.44	0.51	0.58	
		PI	4.45	4.45	4.45	4.45	4.46	4.46	4.46	4.46	4.47	4.47	4.47	4.47	4.48	4.48	4.48	4.48	
	35	TC	13.40	13.40	13.54	13.69	14.29	14.29	14.29	14.29	14.72	14.72	14.95	14.72	15.87	15.87	15.87	15.87	
		S/T	0.73	0.83	0.91	1.00	0.59	0.67	0.76	0.85	0.52	0.60	0.68	0.77	0.36	0.44	0.51	0.59	
		PI	4.86	4.86	4.86	4.86	4.88	4.88	4.88	4.88	4.89	4.89	4.90	4.89	4.89	4.89	4.89	4.89	
	40	TC	12.62	12.62	12.75	12.88	13.46	13.46	13.46	13.51	13.87	13.87	14.00	13.87	14.98	14.98	14.98	14.98	
		S/T	0.75	0.86	0.95	1.00	0.59	0.69	0.79	0.88	0.52	0.61	0.71	0.80	0.35	0.44	0.52	0.61	
		PI	5.37	5.37	5.37	5.37	5.39	5.39	5.39	5.39	5.41	5.41	5.41	5.41	5.43	5.43	5.43	5.43	
	46	TC	11.69	11.69	11.81	11.92	12.47	12.47	12.47	12.58	12.87	12.87	12.87	12.87	13.93	13.93	13.93	13.93	
		S/T	0.76	0.87	0.97	1.00	0.60	0.70	0.80	0.89	0.52	0.62	0.72	0.81	0.35	0.44	0.53	0.62	
		PI	5.97	5.97	5.97	5.97	6.00	6.00	6.00	6.00	6.02	6.02	6.02	6.02	6.07	6.07	6.07	6.07	
	50	TC	10.98	11.09	11.21	11.32	11.72	11.72	11.72	11.84	12.12	12.12	12.12	12.12	13.13	13.13	13.13	13.13	
		S/T	0.78	0.89	1.00	1.00	0.61	0.71	0.82	0.92	0.53	0.63	0.73	0.83	0.34	0.44	0.53	0.91	
		PI	6.47	6.47	6.47	6.47	6.50	6.50	6.50	6.50	6.51	6.51	6.51	6.51	6.57	6.57	6.57	6.57	

2000	-15	TC	16.62	16.62	16.80	16.98	17.46	17.46	17.46	17.46	17.89	17.89	17.89	17.89	19.01	19.01	19.01	19.01
		S/T	0.70	0.77	1.00	1.00	0.56	0.64	0.71	0.98	0.49	0.57	0.65	0.72	0.35	0.42	0.49	0.56
		PI	3.47	3.47	3.47	3.47	3.45	3.45	3.45	3.45	3.45	3.45	3.45	3.45	3.45	3.45	3.45	3.45
	-10	TC	16.52	16.52	16.70	16.88	17.37	17.37	17.37	17.37	17.80	17.80	17.80	17.80	18.95	18.95	18.95	18.95
		S/T	0.70	0.78	1.00	1.00	0.56	0.64	0.72	0.98	0.49	0.57	0.65	0.73	0.35	0.43	0.49	0.56
		PI	3.45	3.45	3.45	3.45	3.45	3.45	3.45	3.45	3.44	3.44	3.44	3.44	3.45	3.45	3.45	3.45
	-5	TC	16.42	16.42	16.60	16.78	17.30	17.30	17.30	17.30	17.74	17.74	17.74	17.74	18.90	18.90	18.90	18.90
		S/T	0.70	0.78	1.00	1.00	0.57	0.64	0.72	0.99	0.50	0.58	0.65	0.73	0.35	0.43	0.50	0.57
		PI	3.45	3.45	3.45	3.45	3.44	3.44	3.44	3.44	3.44	3.44	3.44	3.44	3.46	3.46	3.46	3.46
	0	TC	16.34	16.34	16.51	16.69	17.23	17.23	17.23	17.23	17.69	17.69	17.69	17.69	18.88	18.88	18.88	18.88
		S/T	0.71	0.78	1.00	1.00	0.57	0.65	0.73	0.99	0.50	0.58	0.66	0.74	0.35	0.43	0.50	0.57
		PI	3.46	3.46	3.46	3.46	3.45	3.45	3.45	3.45	3.46	3.46	3.46	3.46	3.47	3.47	3.47	3.47
	5	TC	16.25	16.25	16.43	16.61	17.17	17.17	17.17	17.17	17.63	17.63	17.63	17.63	18.87	18.87	18.87	18.87
		S/T	0.71	0.79	1.00	1.00	0.57	0.65	0.73	1.00	0.50	0.58	0.66	0.74	0.35	0.43	0.50	0.57
		PI	3.49	3.49	3.49	3.49	3.49	3.49	3.49	3.49	3.48	3.48	3.48	3.48	3.50	3.50	3.50	3.50
	10	TC	16.16	16.16	16.33	16.51	17.09	17.09	17.09	17.09	17.56	17.56	17.56	17.56	18.82	18.82	18.82	18.82
		S/T	0.71	0.79	1.00	1.00	0.57	0.65	0.73	1.00	0.50	0.58	0.66	0.74	0.36	0.44	0.50	0.57
		PI	3.55	3.55	3.55	3.55	3.54	3.54	3.54	3.54	3.54	3.54	3.54	3.54	3.54	3.54	3.54	3.54
	15	TC	16.02	16.02	16.20	16.37	16.97	16.97	16.97	16.97	17.45	17.45	17.45	17.45	18.74	18.74	18.74	18.74
		S/T	0.72	0.80	0.88	0.96	0.58	0.66	0.74	0.82	0.51	0.59	0.67	0.75	0.36	0.44	0.51	0.58
		PI	3.64	3.64	3.64	3.64	3.62	3.62	3.62	3.62	3.62	3.62	3.62	3.62	3.62	3.62	3.62	3.62
	20	TC	15.84	15.84	16.02	16.19	16.79	16.79	16.79	16.79	17.28	17.28	17.28	17.28	18.58	18.58	18.58	18.58
		S/T	0.72	0.80	0.88	0.96	0.58	0.66	0.74	0.82	0.51	0.59	0.67	0.75	0.36	0.44	0.51	0.58
		PI	3.76	3.76	3.76	3.76	3.75	3.75	3.75	3.75	3.74	3.74	3.74	3.74	3.73	3.73	3.73	3.73
	25	TC	15.10	15.10	15.24	15.38	16.05	16.05	16.05	16.05	16.53	16.53	16.53	16.53	17.77	17.77	17.77	17.77
		S/T	0.73	0.81	0.90	0.98	0.58	0.67	0.75	0.83	0.51	0.60	0.68	0.76	0.36	0.44	0.51	0.59
		PI	4.15	4.15	4.15	4.15	4.15	4.15	4.15	4.15	4.15	4.15	4.15	4.15	4.15	4.15	4.15	4.15
	30	TC	14.41	14.41	14.55	14.69	15.30	15.30	15.30	15.30	15.79	15.79	15.79	15.79	16.99	16.99	16.99	16.99
		S/T	0.73	0.83	0.92	1.00	0.59	0.67	0.76	0.85	0.52	0.60	0.69	0.77	0.36	0.44	0.52	0.59
		PI	4.54	4.54	4.54	4.54	4.55	4.55	4.55	4.55	4.56	4.56	4.56	4.56	4.58	4.58	4.58	4.58
	35	TC	13.66	13.66	13.80	13.95	14.55	14.55	14.55	14.55	15.01	15.01	**15.24**	15.01	16.19	16.19	16.19	16.19
		S/T	0.75	0.84	0.94	1.00	0.59	0.68	0.78	0.87	0.52	0.61	**0.69**	0.79	0.35	0.44	0.52	0.60
		PI	4.96	4.96	4.96	4.96	4.98	4.98	4.98	4.98	4.99	4.99	**5.00**	4.99	5.03	5.03	5.03	5.03
	40	TC	12.86	12.92	13.05	13.18	13.72	13.72	13.72	13.77	14.15	14.15	14.27	14.15	15.29	15.29	15.29	15.29
		S/T	0.77	0.88	0.98	1.00	0.60	0.70	0.80	0.90	0.52	0.62	0.72	0.82	0.35	0.44	0.53	0.90
		PI	5.48	5.48	5.48	5.48	5.50	5.50	5.50	5.50	5.51	5.51	5.52	5.51	5.56	5.56	5.56	5.56
	46	TC	11.92	12.04	12.15	12.27	12.73	12.73	12.73	12.84	13.13	13.13	13.13	13.13	14.22	14.22	14.22	14.22
		S/T	0.78	0.89	1.00	1.00	0.61	0.71	0.82	0.92	0.53	0.63	0.73	0.83	0.35	0.44	0.53	0.92
		PI	6.10	6.10	6.10	6.10	6.12	6.12	6.12	6.12	6.14	6.14	6.14	6.14	6.19	6.19	6.19	6.19
	50	TC	11.18	11.29	11.41	11.52	11.95	11.95	11.95	12.07	12.35	12.35	12.35	12.35	13.39	13.39	13.39	13.39
		S/T	0.80	0.92	1.00	1.00	0.62	0.73	0.84	0.95	0.53	0.64	0.75	0.86	0.34	0.44	0.54	0.97
		PI	6.60	6.60	6.60	6.60	6.63	6.63	6.63	6.63	6.65	6.65	6.65	6.65	6.70	6.70	6.70	6.70

TC:Total Cooling Capacity (kW)

S/T:Sensible Cooling Capacity Ratio

PI:Power Input(kW)

Note: The table shows the case where the operation frequency of a compressor is fixed.

7.2 Heating

24k									[SI_Unit]
INDOOR AIRFLOW (CMH)	HEATING PERFORMANCE AT INDOOR DRY BULB TEMPERATURE								
	OUTDOOR DB(°C)	TC:TOTAL CAPACITY IN KILOWATTS (KW)				PI:TOTAL POWER IN KILOWATTS (KW)			
		Indoor Conditions (DB °C)				Indoor Conditions (DB °C)			
		16.0	20.0	22.0	24.0	16.0	20.0	22.0	24.0
992	-15.0	5.23	5.18	5.16	5.11	2.30	2.38	2.33	2.33
	-10.0	5.59	5.53	5.51	5.45	2.45	2.54	2.48	2.49
	-7.0	5.85	5.80	5.77	5.71	2.61	2.70	2.64	2.65
	-5.6	6.00	5.94	5.91	5.85	2.53	2.55	2.55	2.56
	-2.8	6.11	6.06	6.03	5.97	2.39	2.40	2.40	2.41
	0.0	6.17	6.09	6.06	6.03	2.25	2.25	2.25	2.26
	2.8	6.46	6.38	6.32	6.29	2.12	2.12	2.12	2.12
	5.6	6.96	6.87	6.81	6.75	2.00	1.99	1.99	1.99
	7.0	7.48	7.39	7.24	7.19	1.94	1.86	1.92	1.92
	11.1	7.79	7.68	7.62	7.59	1.74	1.73	1.72	1.71
	13.9	8.05	7.94	7.88	7.85	1.61	1.59	1.57	1.56
	16.7	8.34	8.23	8.17	8.11	1.48	1.45	1.43	1.43
	18.0	8.46	8.34	8.29	8.23	1.43	1.39	1.38	1.36
1118	-15.0	5.33	5.28	5.23	5.20	2.32	2.40	2.34	2.35
	-10.0	5.69	5.63	5.58	5.55	2.47	2.56	2.50	2.51
	-7.0	5.96	5.90	5.85	5.82	2.63	2.72	2.66	2.67
	-5.6	6.11	6.06	6.00	5.97	2.55	2.57	2.58	2.59
	-2.8	6.23	6.17	6.14	6.09	2.41	2.42	2.43	2.43
	0.0	6.29	6.20	6.17	6.14	2.27	2.27	2.28	2.28
	2.8	6.58	6.49	6.43	6.40	2.14	2.14	2.14	2.14
	5.6	7.07	6.98	6.96	6.90	2.02	2.01	2.01	2.01
	7.0	7.63	7.53	7.39	7.33	1.96	1.88	1.95	1.94
	11.1	7.94	7.82	7.79	7.74	1.76	1.74	1.73	1.73
	13.9	8.23	8.11	8.05	8.00	1.63	1.61	1.59	1.58
	16.7	8.49	8.37	8.32	8.26	1.50	1.47	1.45	1.43
	18.0	8.63	8.52	8.46	8.40	1.43	1.41	1.39	1.37
1247	-15.0	5.39	5.34	5.31	5.29	2.33	2.42	2.37	2.38
	-10.0	5.75	5.70	5.67	5.64	2.49	2.58	2.53	2.54
	-7.0	6.03	5.97	5.94	5.91	2.65	2.75	2.69	2.70
	-5.6	6.17	6.11	6.09	6.06	2.58	2.59	2.60	2.61
	-2.8	6.32	6.23	6.20	6.17	2.43	2.44	2.45	2.46
	0.0	6.38	6.29	6.23	6.20	2.29	2.29	2.30	2.30
	2.8	6.64	6.55	6.52	6.46	2.16	2.16	2.16	2.16
	5.6	7.16	7.07	7.01	6.98	2.04	2.03	2.03	2.03
	7.0	7.71	7.62	7.48	7.42	1.98	1.90	1.97	1.96
	11.1	8.03	7.94	7.88	7.82	1.78	1.76	1.75	1.74
	13.9	8.32	8.20	8.14	8.08	1.65	1.62	1.61	1.60
	16.7	8.61	8.49	8.43	8.34	1.52	1.48	1.47	1.45
	18.0	8.75	8.61	8.55	8.49	1.45	1.43	1.41	1.39

Note: The table shows the case where the operation frequency of a compressor is fixed.

30k								[SI_Unit]
INDOOR AIRFLOW (CMH)	HEATING PERFORMANCE AT INDOOR DRY BULB TEMPERATURE							
	OUTDOOR DB(°C)	TC:TOTAL CAPACITY IN KILOWATTS (KW)				PI:TOTAL POWER IN KILOWATTS (KW)			
		Indoor Conditions (DB °C)				Indoor Conditions (DB °C)			
		16.0	20.0	22.0	24.0	16.0	20.0	22.0	24.0
1300	-15.0	5.65	5.57	5.55	5.50	2.29	2.37	2.36	2.38
	-10.0	6.03	5.95	5.92	5.87	2.45	2.53	2.52	2.54
	-7.0	6.32	6.23	6.21	6.15	2.60	2.69	2.68	2.70
	-5.6	6.64	6.55	6.52	6.46	2.57	2.62	2.64	2.67
	-2.8	6.93	6.84	6.81	6.75	2.51	2.56	2.58	2.61
	0.0	7.16	7.04	7.02	6.96	2.46	2.50	2.52	2.55
	2.8	7.65	7.54	7.48	7.42	2.42	2.47	2.49	2.51
	5.6	8.41	8.29	8.23	8.18	2.39	2.43	2.45	2.47
	7.0	9.24	9.12	8.86	8.80	2.38	2.41	2.44	2.46
	11.1	9.76	9.64	9.58	9.49	2.32	2.35	2.37	2.39
	13.9	10.25	10.10	10.05	9.99	2.27	2.31	2.32	2.34
	16.7	10.74	10.60	10.51	10.45	2.23	2.26	2.28	2.29
	18.0	10.98	10.83	10.74	10.69	2.21	2.24	2.25	2.27
1530	-15.0	5.74	5.69	5.64	5.62	2.32	2.39	2.39	2.41
	-10.0	6.13	6.08	6.02	6.00	2.47	2.55	2.55	2.57
	-7.0	6.42	6.37	6.31	6.28	2.63	2.71	2.71	2.73
	-5.6	6.75	6.70	6.64	6.61	2.59	2.64	2.67	2.69
	-2.8	7.07	6.99	6.96	6.90	2.54	2.58	2.61	2.63
	0.0	7.31	7.19	7.16	7.10	2.48	2.52	2.55	2.57
	2.8	7.80	7.68	7.62	7.57	2.45	2.49	2.51	2.53
	5.6	8.58	8.47	8.41	8.35	2.41	2.45	2.47	2.49
	7.0	9.42	9.29	9.03	8.97	2.40	2.43	2.46	2.48
	11.1	9.96	9.81	9.76	9.67	2.34	2.37	2.39	2.41
	13.9	10.45	10.31	10.22	10.16	2.29	2.32	2.34	2.36
	16.7	10.95	10.80	10.71	10.66	2.25	2.28	2.29	2.31
	18.0	11.18	11.03	10.95	10.86	2.22	2.25	2.27	2.29
1700	-15.0	5.83	5.75	5.73	5.68	2.34	2.42	2.41	2.42
	-10.0	6.22	6.14	6.12	6.06	2.49	2.58	2.57	2.59
	-7.0	6.52	6.44	6.41	6.35	2.65	2.74	2.73	2.75
	-5.6	6.84	6.75	6.73	6.67	2.62	2.67	2.69	2.71
	-2.8	7.16	7.07	7.02	6.99	2.56	2.61	2.63	2.65
	0.0	7.36	7.28	7.22	7.16	2.50	2.55	2.57	2.59
	2.8	7.86	7.77	7.71	7.65	2.47	2.51	2.53	2.55
	5.6	8.64	8.52	8.47	8.41	2.43	2.47	2.50	2.52
	7.0	9.51	9.38	9.12	9.06	2.42	2.45	2.48	2.50
	11.1	10.05	9.90	9.84	9.79	2.35	2.39	2.41	2.43
	13.9	10.54	10.39	10.34	10.25	2.31	2.34	2.36	2.38
	16.7	11.03	10.89	10.80	10.74	2.26	2.30	2.31	2.33
	18.0	11.27	11.12	11.03	10.98	2.24	2.27	2.29	2.30

Note: The table shows the case where the operation frequency of a compressor is fixed.

36k+YDAX-100H-09M25									[SI_Unit]
INDOOR AIRFLOW (CMH)	HEATING PERFORMANCE AT INDOOR DRY BULB TEMPERATURE								
	OUTDOOR DB(°C)	TC:TOTAL CAPACITY IN KILOWATTS (KW)				PI:TOTAL POWER IN KILOWATTS (KW)			
		Indoor Conditions (DB °C)				Indoor Conditions (DB °C)			
		16.0	20.0	22.0	24.0	16.0	20.0	22.0	24.0
1300	-15.0	7.98	7.90	7.85	7.80	3.44	3.57	3.50	3.51
	-10.0	8.52	8.44	8.38	8.33	3.67	3.80	3.73	3.75
	-7.0	8.92	8.84	8.78	8.73	3.90	4.04	3.96	3.98
	-5.6	9.07	8.98	8.93	8.87	3.80	3.83	3.85	3.87
	-2.8	9.19	9.07	9.04	8.98	3.62	3.64	3.66	3.67
	0.0	9.19	9.10	9.04	8.98	3.43	3.45	3.45	3.46
	2.8	9.53	9.42	9.36	9.30	3.27	3.28	3.28	3.29
	5.6	10.20	10.06	10.00	9.94	3.11	3.11	3.11	3.11
	7.0	10.94	10.79	10.62	10.53	3.03	2.94	3.03	3.03
	11.1	11.31	11.17	11.08	10.99	2.77	2.76	2.75	2.74
	13.9	11.63	11.49	11.40	11.31	2.60	2.58	2.57	2.55
	16.7	11.98	11.80	11.72	11.63	2.43	2.40	2.39	2.37
	18.0	12.15	11.98	11.89	11.78	2.35	2.32	2.30	2.28
1530	-15.0	8.15	8.07	8.04	7.99	3.48	3.60	3.53	3.55
	-10.0	8.70	8.62	8.59	8.53	3.71	3.84	3.77	3.79
	-7.0	9.11	9.03	9.00	8.94	3.94	4.08	4.00	4.02
	-5.6	9.24	9.16	9.13	9.07	3.83	3.87	3.89	3.90
	-2.8	9.39	9.27	9.22	9.16	3.65	3.68	3.69	3.70
	0.0	9.39	9.27	9.22	9.16	3.46	3.48	3.49	3.50
	2.8	9.74	9.62	9.56	9.48	3.30	3.31	3.32	3.32
	5.6	10.40	10.29	10.20	10.14	3.14	3.14	3.14	3.14
	7.0	11.15	11.02	10.82	10.76	3.06	2.97	3.06	3.06
	11.1	11.54	11.40	11.31	11.25	2.80	2.79	2.78	2.77
	13.9	11.89	11.72	11.66	11.57	2.62	2.60	2.59	2.58
	16.7	12.24	12.07	11.98	11.89	2.46	2.43	2.41	2.40
	18.0	12.41	12.21	12.12	12.04	2.37	2.34	2.32	2.30
1700	-15.0	8.24	8.16	8.11	8.06	3.51	3.64	3.57	3.58
	-10.0	8.80	8.71	8.66	8.61	3.75	3.88	3.80	3.82
	-7.0	9.21	9.13	9.07	9.01	3.98	4.12	4.04	4.06
	-5.6	9.36	9.27	9.22	9.16	3.87	3.91	3.92	3.94
	-2.8	9.48	9.39	9.33	9.27	3.69	3.71	3.72	3.73
	0.0	9.51	9.39	9.33	9.27	3.50	3.51	3.52	3.53
	2.8	9.85	9.71	9.65	9.59	3.33	3.34	3.35	3.35
	5.6	10.52	10.38	10.32	10.26	3.17	3.17	3.17	3.17
	7.0	11.29	11.14	10.93	10.88	3.09	3.00	3.09	3.09
	11.1	11.66	11.51	11.43	11.37	2.83	2.82	2.81	2.80
	13.9	12.01	11.86	11.78	11.69	2.65	2.63	2.62	2.61
	16.7	12.36	12.18	12.09	12.01	2.48	2.45	2.44	2.42
	18.0	12.53	12.36	12.27	12.15	2.40	2.36	2.35	2.33

Note: The table shows the case where the operation frequency of a compressor is fixed.

36k+YDAX-100H-09T35									[SI_Unit]
INDOOR AIRFLOW (CMH)	HEATING PERFORMANCE AT INDOOR DRY BULB TEMPERATURE								
	OUTDOOR DB(°C)	TC:TOTAL CAPACITY IN KILOWATTS (KW)				PI:TOTAL POWER IN KILOWATTS (KW)			
		Indoor Conditions (DB °C)				Indoor Conditions (DB °C)			
		16.0	20.0	22.0	24.0	16.0	20.0	22.0	24.0
1300	-15.0	7.80	7.73	7.68	7.65	3.40	3.53	3.46	3.47
	-10.0	8.33	8.25	8.20	8.17	3.63	3.76	3.69	3.71
	-7.0	8.73	8.64	8.59	8.56	3.86	4.00	3.92	3.94
	-5.6	8.91	8.82	8.76	8.73	3.76	3.80	3.81	3.83
	-2.8	9.05	8.96	8.91	8.85	3.58	3.61	3.62	3.63
	0.0	9.11	8.99	8.93	8.88	3.39	3.41	3.42	3.44
	2.8	9.49	9.34	9.28	9.22	3.24	3.25	3.26	3.27
	5.6	10.18	10.04	9.98	9.89	3.10	3.10	3.10	3.11
	7.0	10.95	10.79	10.59	10.53	3.02	2.94	3.03	3.03
	11.1	11.34	11.20	11.11	11.05	2.78	2.76	2.76	2.75
	13.9	11.72	11.54	11.46	11.40	2.61	2.59	2.58	2.57
	16.7	12.09	11.92	11.83	11.75	2.45	2.42	2.41	2.40
	18.0	12.27	12.09	12.01	11.92	2.37	2.34	2.32	2.31
1530	-15.0	7.95	7.88	7.83	7.80	3.45	3.57	3.50	3.52
	-10.0	8.49	8.41	8.36	8.33	3.68	3.80	3.73	3.75
	-7.0	8.90	8.81	8.76	8.73	3.91	4.04	3.97	3.99
	-5.6	9.08	8.99	8.93	8.91	3.80	3.84	3.86	3.88
	-2.8	9.25	9.14	9.08	9.02	3.62	3.65	3.66	3.67
	0.0	9.28	9.17	9.11	9.05	3.43	3.45	3.46	3.47
	2.8	9.69	9.54	9.49	9.43	3.28	3.29	3.29	3.30
	5.6	10.38	10.24	10.18	10.12	3.13	3.13	3.14	3.14
	7.0	11.18	11.02	10.82	10.73	3.06	2.97	3.06	3.06
	11.1	11.60	11.43	11.34	11.28	2.80	2.79	2.79	2.78
	13.9	11.98	11.80	11.72	11.63	2.63	2.61	2.60	2.59
	16.7	12.36	12.18	12.09	12.01	2.47	2.45	2.43	2.42
	18.0	12.53	12.36	12.27	12.18	2.39	2.36	2.34	2.33
1700	-15.0	8.04	7.96	7.91	7.88	3.48	3.60	3.53	3.55
	-10.0	8.58	8.50	8.45	8.42	3.71	3.84	3.77	3.79
	-7.0	8.99	8.91	8.85	8.82	3.95	4.09	4.01	4.03
	-5.6	9.17	9.08	9.02	8.99	3.84	3.88	3.90	3.92
	-2.8	9.34	9.22	9.17	9.14	3.66	3.69	3.70	3.71
	0.0	9.40	9.28	9.22	9.17	3.47	3.49	3.50	3.51
	2.8	9.78	9.66	9.57	9.51	3.31	3.32	3.33	3.34
	5.6	10.50	10.36	10.30	10.21	3.16	3.17	3.17	3.17
	7.0	11.29	11.14	10.93	10.85	3.09	3.00	3.09	3.09
	11.1	11.72	11.54	11.49	11.40	2.83	2.82	2.81	2.81
	13.9	12.09	11.92	11.83	11.75	2.66	2.64	2.63	2.62
	16.7	12.47	12.30	12.21	12.12	2.50	2.47	2.45	2.44
	18.0	12.67	12.47	12.38	12.30	2.41	2.38	2.36	2.35

Note: The table shows the case where the operation frequency of a compressor is fixed.

42k								[SI_Unit]
INDOOR AIRFLOW (CMH)	HEATING PERFORMANCE AT INDOOR DRY BULB TEMPERATURE							
	OUTDOOR DB(°C)	TC:TOTAL CAPACITY IN KILOWATTS (KW)				PI:TOTAL POWER IN KILOWATTS (KW)			
		Indoor Conditions (DB °C)				Indoor Conditions (DB °C)			
		16.0	20.0	22.0	24.0	16.0	20.0	22.0	24.0
1600	-15.0	8.18	8.08	8.03	7.98	3.39	3.50	3.49	3.53
	-10.0	8.73	8.62	8.57	8.52	3.61	3.73	3.72	3.76
	-7.0	9.15	9.03	8.98	8.92	3.84	3.97	3.96	4.00
	-5.6	9.59	9.47	9.41	9.35	3.80	3.87	3.91	3.95
	-2.8	10.02	9.91	9.85	9.79	3.72	3.80	3.83	3.87
	0.0	10.31	10.20	10.11	10.05	3.65	3.72	3.76	3.79
	2.8	11.01	10.86	10.81	10.72	3.61	3.68	3.72	3.75
	5.6	12.11	11.94	11.85	11.79	3.58	3.64	3.67	3.71
	7.0	13.27	13.08	12.73	12.64	3.57	3.62	3.66	3.69
	11.1	13.97	13.80	13.71	13.63	3.48	3.54	3.58	3.61
	13.9	14.67	14.50	14.38	14.29	3.43	3.49	3.52	3.55
	16.7	15.37	15.16	15.05	14.96	3.37	3.43	3.46	3.48
	18.0	15.71	15.48	15.40	15.28	3.35	3.40	3.43	3.46
1750	-15.0	8.34	8.24	8.19	8.14	3.42	3.53	3.53	3.55
	-10.0	8.90	8.80	8.74	8.69	3.65	3.77	3.76	3.79
	-7.0	9.32	9.21	9.16	9.10	3.88	4.00	4.00	4.03
	-5.6	9.79	9.67	9.62	9.56	3.83	3.91	3.95	3.99
	-2.8	10.23	10.11	10.02	9.96	3.76	3.83	3.87	3.91
	0.0	10.55	10.40	10.31	10.25	3.69	3.76	3.79	3.83
	2.8	11.24	11.10	11.01	10.92	3.65	3.72	3.75	3.79
	5.6	12.35	12.17	12.11	12.03	3.61	3.68	3.71	3.75
	7.0	13.53	13.34	12.96	12.87	3.60	3.66	3.70	3.73
	11.1	14.26	14.09	13.97	13.89	3.52	3.59	3.62	3.65
	13.9	14.96	14.79	14.67	14.58	3.47	3.53	3.56	3.59
	16.7	15.69	15.45	15.37	15.25	3.41	3.47	3.50	3.53
	18.0	16.00	15.80	15.69	15.57	3.39	3.44	3.47	3.50
1900	-15.0	8.41	8.31	8.26	8.21	3.46	3.57	3.56	3.60
	-10.0	8.98	8.87	8.82	8.77	3.69	3.81	3.80	3.84
	-7.0	9.41	9.30	9.24	9.19	3.92	4.05	4.04	4.08
	-5.6	9.88	9.76	9.70	9.64	3.87	3.95	3.99	4.03
	-2.8	10.31	10.20	10.14	10.08	3.80	3.88	3.91	3.95
	0.0	10.63	10.49	10.43	10.34	3.73	3.80	3.84	3.87
	2.8	11.36	11.21	11.13	11.04	3.69	3.76	3.79	3.83
	5.6	12.49	12.32	12.23	12.14	3.65	3.72	3.75	3.79
	7.0	13.67	13.48	13.10	13.02	3.64	3.70	3.74	3.78
	11.1	14.44	14.24	14.15	14.03	3.56	3.62	3.66	3.69
	13.9	15.13	14.93	14.84	14.73	3.51	3.57	3.60	3.63
	16.7	15.86	15.66	15.54	15.42	3.45	3.51	3.54	3.57
	18.0	16.21	15.98	15.86	15.77	3.43	3.48	3.51	3.54

Note: The table shows the case where the operation frequency of a compressor is fixed.

48k									[SI_Unit]
INDOOR AIRFLOW (CMH)	HEATING PERFORMANCE AT INDOOR DRY BULB TEMPERATURE								
	OUTDOOR DB(°C)	TC:TOTAL CAPACITY IN KILOWATTS (KW)				PI:TOTAL POWER IN KILOWATTS (KW)			
		Indoor Conditions (DB °C)				Indoor Conditions (DB °C)			
		16.0	20.0	22.0	24.0	16.0	20.0	22.0	24.0
1600	-15.0	10.93	10.83	10.76	10.71	4.72	4.88	4.81	4.85
	-10.0	11.68	11.57	11.49	11.43	5.03	5.20	5.13	5.17
	-7.0	12.23	12.12	12.03	11.98	5.35	5.53	5.46	5.50
	-5.6	12.55	12.44	12.35	12.29	5.24	5.31	5.35	5.39
	-2.8	12.84	12.70	12.64	12.55	5.05	5.12	5.15	5.18
	0.0	12.99	12.81	12.76	12.67	4.86	4.92	4.95	4.98
	2.8	13.60	13.42	13.34	13.22	4.72	4.77	4.80	4.82
	5.6	14.67	14.47	14.38	14.26	4.58	4.62	4.64	4.66
	7.0	15.85	15.63	15.31	15.19	4.51	4.48	4.57	4.59
	11.1	16.50	16.26	16.15	16.06	4.27	4.30	4.31	4.33
	13.9	17.11	16.87	16.76	16.61	4.11	4.12	4.13	4.14
	16.7	17.71	17.45	17.34	17.19	3.95	3.96	3.97	3.97
	18.0	17.98	17.74	17.60	17.48	3.87	3.88	3.88	3.89
1750	-15.0	11.18	11.05	11.00	10.95	4.76	4.92	4.87	4.90
	-10.0	11.93	11.80	11.75	11.69	5.08	5.25	5.19	5.23
	-7.0	12.50	12.36	12.30	12.25	5.40	5.58	5.52	5.55
	-5.6	12.81	12.67	12.61	12.55	5.29	5.36	5.40	5.44
	-2.8	13.10	12.96	12.87	12.81	5.10	5.17	5.20	5.24
	0.0	13.25	13.08	12.99	12.93	4.91	4.97	5.00	5.03
	2.8	13.86	13.68	13.60	13.51	4.77	4.82	4.85	4.87
	5.6	14.96	14.76	14.67	14.58	4.63	4.67	4.69	4.71
	7.0	16.16	15.95	15.63	15.51	4.56	4.53	4.62	4.64
	11.1	16.84	16.61	16.50	16.38	4.32	4.35	4.36	4.37
	13.9	17.45	17.22	17.08	16.96	4.15	4.17	4.18	4.19
	16.7	18.06	17.80	17.69	17.54	4.00	4.01	4.02	4.02
	18.0	18.35	18.09	17.98	17.83	3.92	3.93	3.93	3.94
1900	-15.0	11.30	11.17	11.12	11.04	4.81	4.97	4.91	4.94
	-10.0	12.06	11.93	11.87	11.79	5.13	5.30	5.24	5.27
	-7.0	12.64	12.50	12.44	12.35	5.45	5.63	5.56	5.60
	-5.6	12.96	12.81	12.76	12.67	5.34	5.42	5.46	5.49
	-2.8	13.25	13.10	13.02	12.96	5.15	5.22	5.26	5.29
	0.0	13.39	13.22	13.13	13.05	4.96	5.02	5.05	5.08
	2.8	14.03	13.83	13.74	13.66	4.82	4.87	4.90	4.93
	5.6	15.13	14.93	14.82	14.73	4.68	4.72	4.74	4.77
	7.0	16.34	16.12	15.77	15.68	4.61	4.58	4.67	4.69
	11.1	17.02	16.79	16.67	16.55	4.37	4.40	4.41	4.42
	13.9	17.63	17.40	17.28	17.16	4.20	4.22	4.23	4.24
	16.7	18.26	18.00	17.89	17.74	4.04	4.06	4.06	4.07
	18.0	18.55	18.29	18.15	18.03	3.96	3.97	3.98	3.98

Note: The table shows the case where the operation frequency of a compressor is fixed.

55k									[SI_Unit]
INDOOR AIRFLOW (CMH)	HEATING PERFORMANCE AT INDOOR DRY BULB TEMPERATURE								
	OUTDOOR DB(°C)	TC:TOTAL CAPACITY IN KILOWATTS (KW)				PI:TOTAL POWER IN KILOWATTS (KW)			
		Indoor Conditions (DB °C)				Indoor Conditions (DB °C)			
		16.0	20.0	22.0	24.0	16.0	20.0	22.0	24.0
1650	-15.0	11.84	11.69	11.64	11.56	4.99	5.15	5.14	5.19
	-10.0	12.64	12.48	12.43	12.35	5.33	5.49	5.48	5.54
	-7.0	13.24	13.07	13.02	12.93	5.66	5.84	5.83	5.89
	-5.6	13.68	13.51	13.45	13.36	5.59	5.71	5.77	5.83
	-2.8	14.09	13.94	13.86	13.77	5.50	5.62	5.67	5.73
	0.0	14.35	14.17	14.09	13.97	5.41	5.52	5.58	5.63
	2.8	15.13	14.93	14.84	14.73	5.37	5.48	5.54	5.59
	5.6	16.44	16.23	16.12	16.00	5.34	5.44	5.49	5.55
	7.0	17.87	17.65	17.24	17.13	5.33	5.43	5.49	5.54
	11.1	18.72	18.49	18.35	18.23	5.23	5.33	5.38	5.43
	13.9	19.51	19.25	19.10	18.98	5.17	5.27	5.31	5.36
	16.7	20.29	20.00	19.85	19.71	5.11	5.20	5.25	5.29
	18.0	20.67	20.38	20.23	20.09	5.08	5.17	5.21	5.26
1850	-15.0	12.04	11.92	11.84	11.77	5.04	5.20	5.19	5.25
	-10.0	12.86	12.73	12.65	12.56	5.37	5.55	5.54	5.60
	-7.0	13.47	13.33	13.25	13.16	5.71	5.89	5.89	5.95
	-5.6	13.94	13.80	13.71	13.62	5.65	5.77	5.83	5.89
	-2.8	14.38	14.20	14.12	14.03	5.56	5.67	5.73	5.79
	0.0	14.64	14.44	14.35	14.26	5.47	5.58	5.63	5.69
	2.8	15.42	15.22	15.13	15.02	5.43	5.54	5.59	5.65
	5.6	16.75	16.55	16.44	16.32	5.39	5.50	5.55	5.61
	7.0	18.22	18.00	17.56	17.45	5.39	5.49	5.55	5.60
	11.1	19.10	18.84	18.72	18.58	5.29	5.39	5.44	5.50
	13.9	19.88	19.62	19.48	19.36	5.23	5.33	5.38	5.43
	16.7	20.70	20.41	20.26	20.12	5.17	5.26	5.31	5.36
	18.0	21.07	20.78	20.64	20.46	5.13	5.23	5.28	5.32
2000	-15.0	12.17	12.05	11.97	11.90	5.09	5.26	5.25	5.31
	-10.0	13.00	12.87	12.79	12.71	5.43	5.61	5.60	5.66
	-7.0	13.62	13.48	13.39	13.31	5.77	5.96	5.95	6.02
	-5.6	14.09	13.94	13.86	13.77	5.71	5.83	5.89	5.95
	-2.8	14.52	14.35	14.26	14.17	5.62	5.73	5.79	5.85
	0.0	14.78	14.61	14.49	14.41	5.53	5.64	5.70	5.75
	2.8	15.60	15.36	15.28	15.16	5.49	5.60	5.66	5.71
	5.6	16.93	16.70	16.58	16.49	5.45	5.56	5.61	5.67
	7.0	18.42	18.17	17.74	17.62	5.45	5.55	5.61	5.66
	11.1	19.27	19.01	18.90	18.75	5.35	5.45	5.50	5.56
	13.9	20.09	19.80	19.68	19.54	5.29	5.39	5.44	5.48
	16.7	20.87	20.58	20.44	20.29	5.22	5.32	5.37	5.41
	18.0	21.28	20.96	20.81	20.67	5.19	5.29	5.33	5.38

Note: The table shows the case where the operation frequency of a compressor is fixed.

7. Noise Criterion Curves

7.1 Indoor Unit

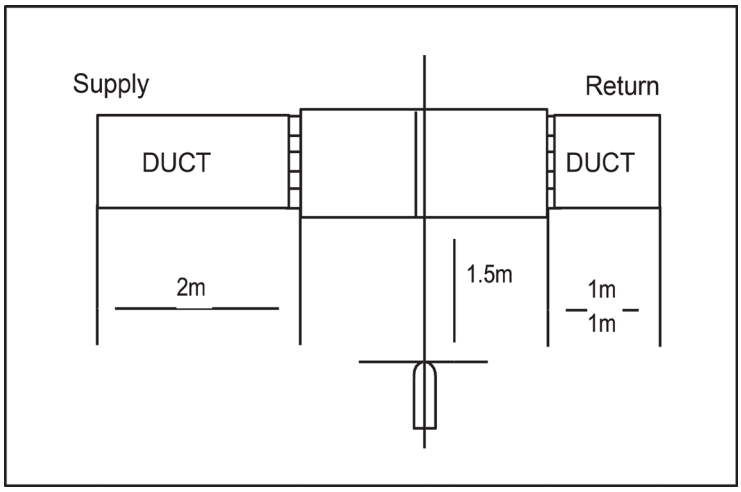

Notes:

-Sound measured at 1.5m away from the center of the unit.

-Data is valid at free field condition

-Data is valid at nominal operation condition

-Reference acoustic pressure OdB = 20μPa

-Sound level will vary depending on a range of factors such as the construction -(acoustic absorption coefficient) of particular room in which the equipment is installed.

-The operating conditions are assumed to be standard.

24k

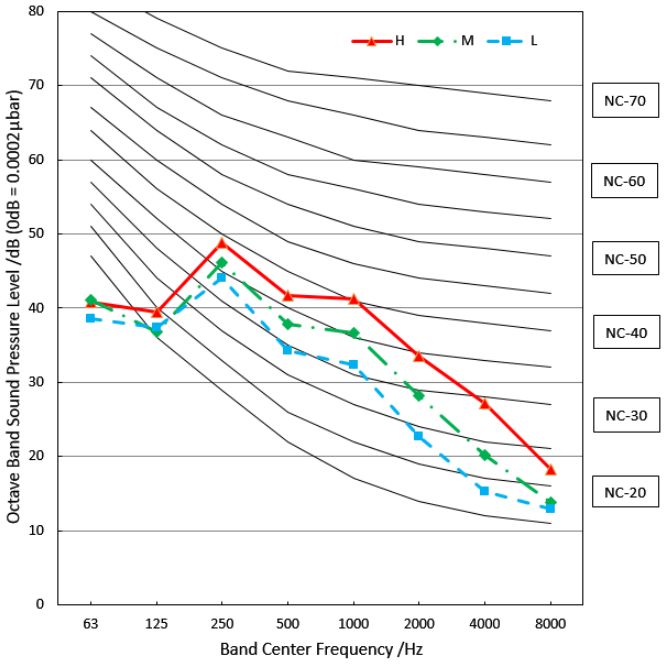

30k

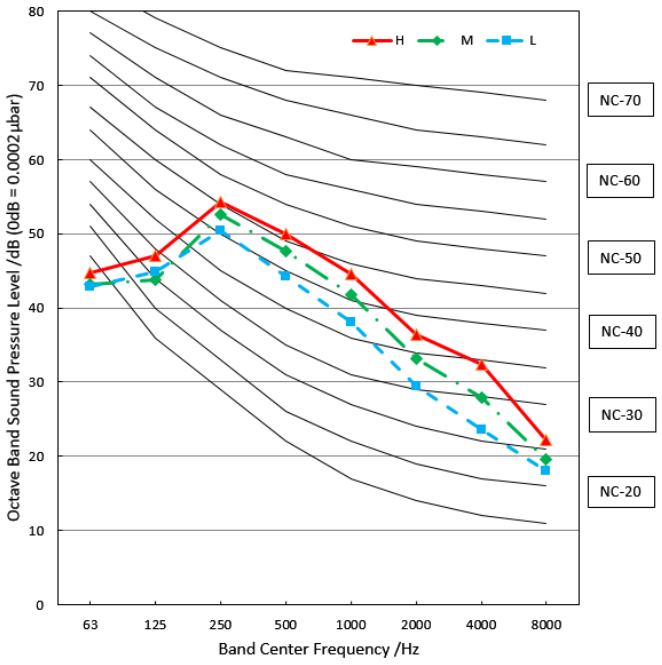

36k

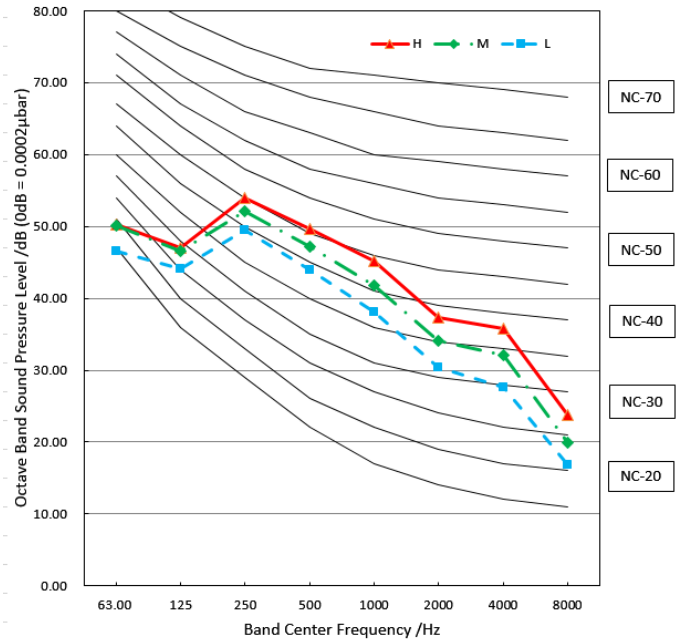

42k

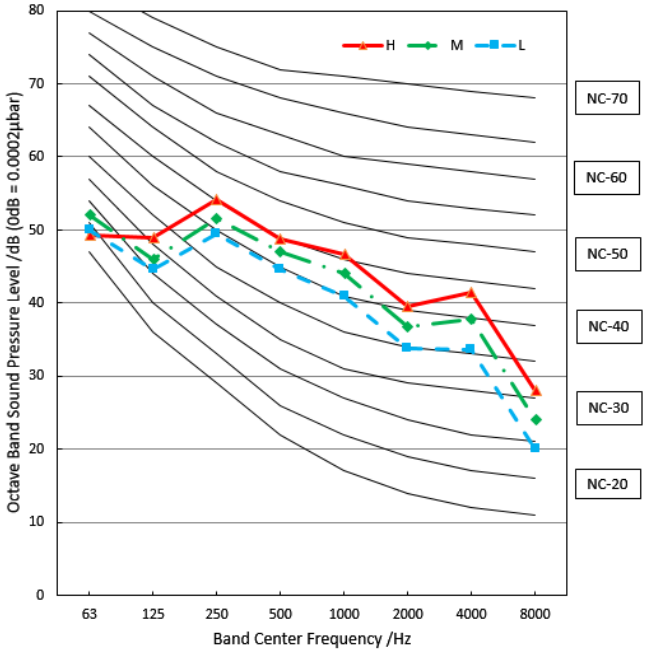

48k

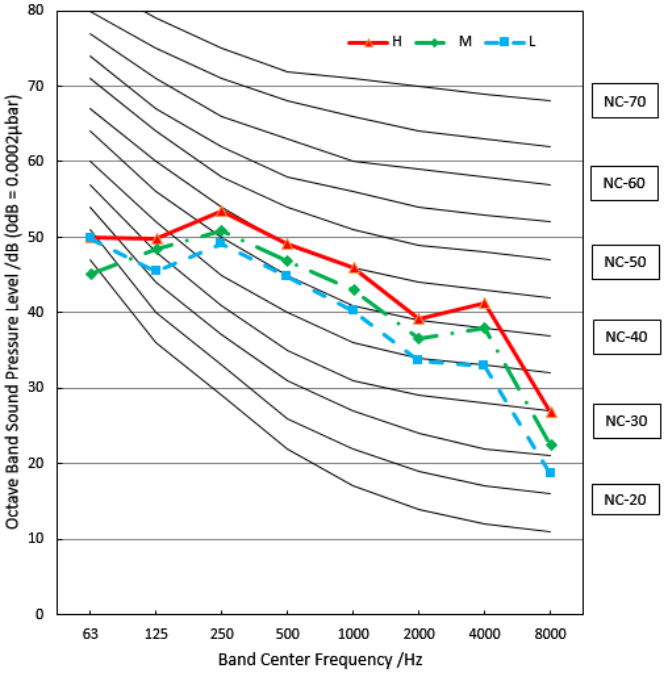

55k

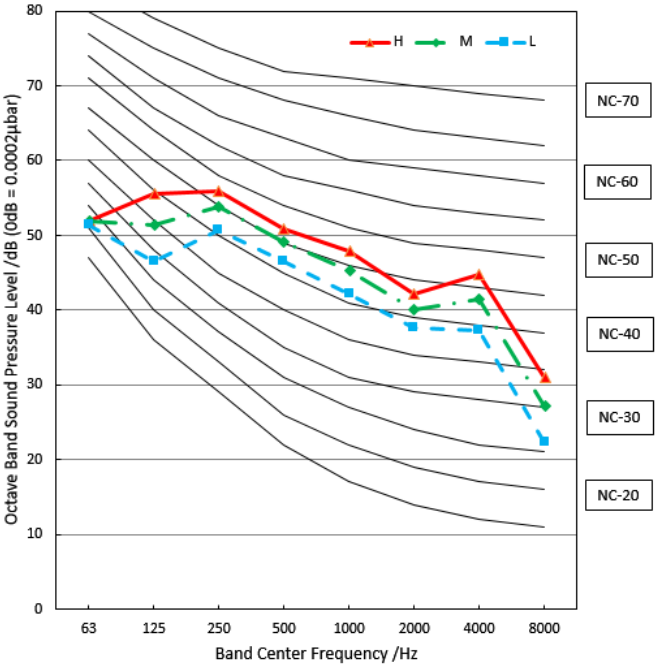

7. Electrical Characteristics

Capacity (Btu/h)		24k	30k	36k
OUDOOR UNIT POWER	Phase	1-phase	1-phase	1-phase
	Frequency and Voltage	220-240V, 50Hz	220-240V, 50Hz	220-240V, 50Hz
	Power Wiring (mm^2)	3×2.5	3×2.5	3×4.0
	Circuit Breaker/ Fuse (A)	25/20	50/40	50/40
Indoor/Outdoor Connecting Wiring	Weak Electric Signal) (mm^2)			
	Strong Electric Signal(mm^2)	4×1.0	4×1.0	4×1.0

Capacity (Btu/h)		36k	42k	48~55k
OUDOOR UNIT POWER	Phase	3-phase	1-phase	3-phase
	Frequency and Voltage	380-415V, 50Hz	220-240V, 50Hz	380-415V, 50Hz
	Power Wiring (mm^2)	5×2.5	3×4.0	5×2.5
	Circuit Breaker/ Fuse (A)	25/20	50/40	32/25
Indoor/Outdoor Connecting Wiring	Weak Electric Signal) (mm^2)			
	Strong Electric Signal(mm^2)	4×1.0	3×1.0	4×1.0

7. Electrical Wiring Diagrams

IDU Capacity (Btu/h)	IDU Wiring Diagram
24k~55k	16022500004263

Abbreviation	Paraphrase
Y/G	Yellow-Green Conductor
CAP1	Indoor Fan Capacitor
FAN1	Indoor Fan
PUMP	PUMP
L	LIVE
N	NEUTRAL
TO CCM Comm.Bus	Central Controller
T1	Indoor Room Temperature
T2	Coil Temperature of Indoor Heat Exchanger
P3	Super High Speed
P2	High Speed

Indoor unit wiring diagram: 16022500004263

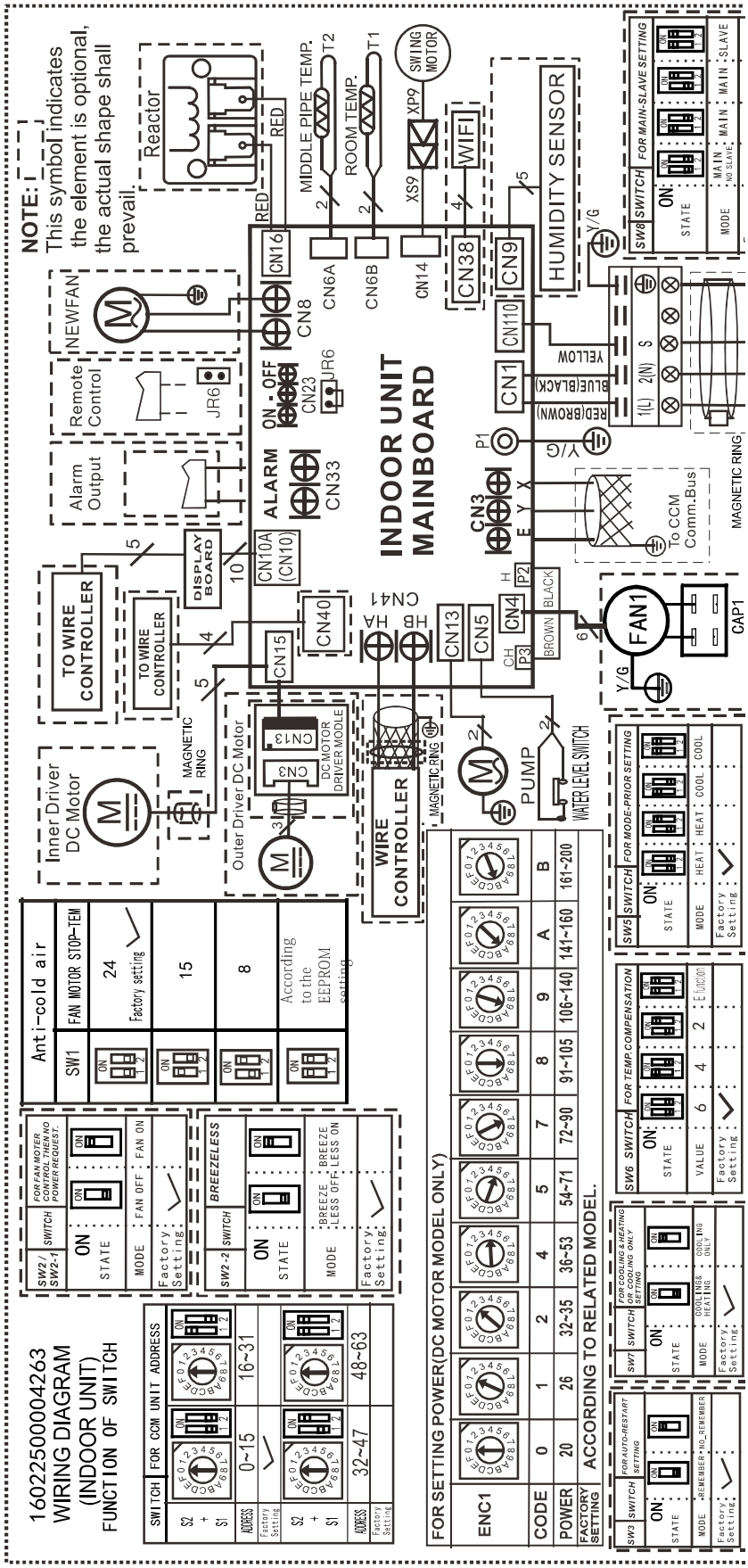

10.1 Some connectors introduce:

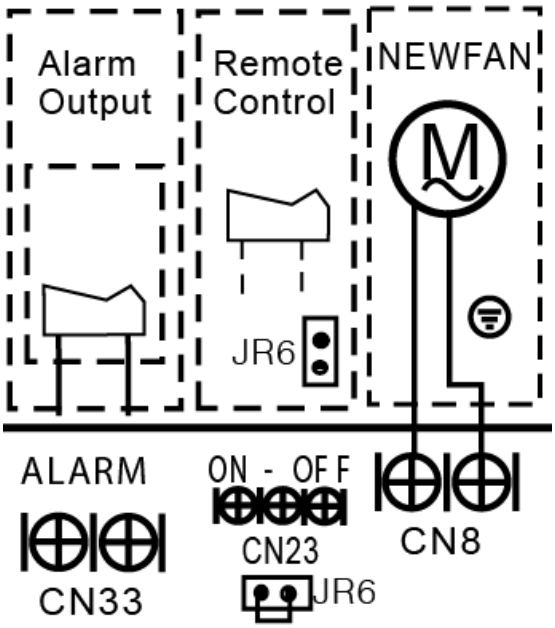

A For remote control (ON-OFF) terminal port CN23 and short connector of JR6
1. Remove the short connector of JR6 when you use ON-OFF function;
2. When remote switch off (OPEN) ;the unit would be off;
3. When remote switch on (CLOSE) ;the unit would be on;
4. When close/open the remote switch, the unit would be responded the demand within 2 seconds;
5. When the remote switch on. you can use remote controller/ wire controller to select the mode what you want ;when the remote switch off , the unit would not respond the demand from remote controller/wire controller.
when the remote switch off , but the remote controller / wire controller are on, CP code would be shown on the display board.
6.The voltage of the port is 12V DC , design Max.current is 5mA.

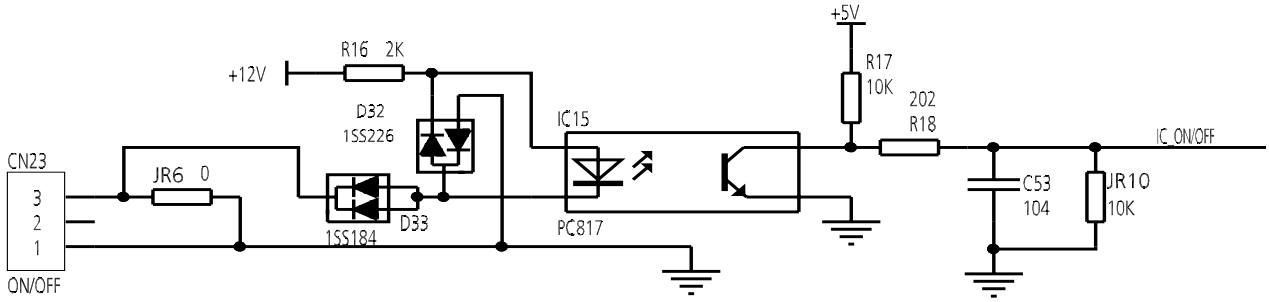

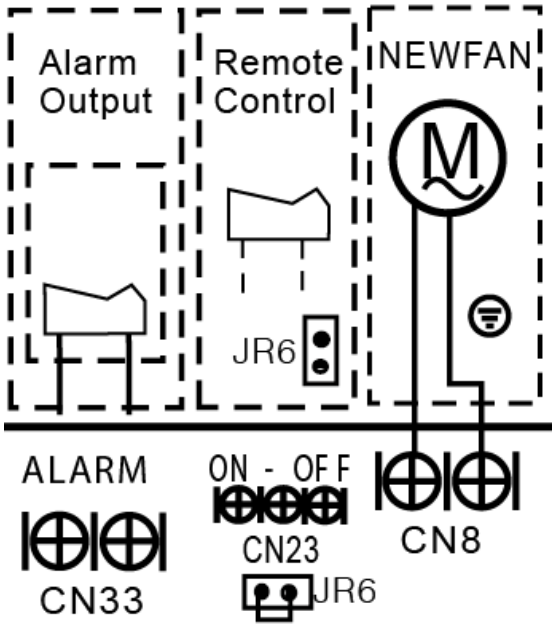

B For ALARM terminal port CN33

1. Provide the terminal port to connect ALARM ,but no voltage of the terminal port , the power from the ALARM system (not from the unit)
2. Although design voltage can support higher voltage ,but we strongly ask you connect the power less than 24V, current less than 0.5A
3. When the unit occurs the problem , the relay would be closed , then ALARM works

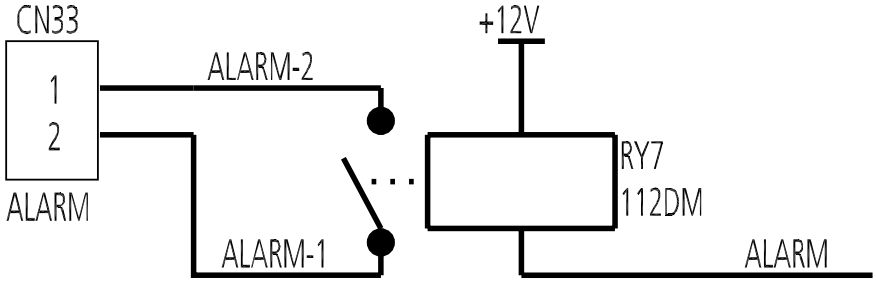

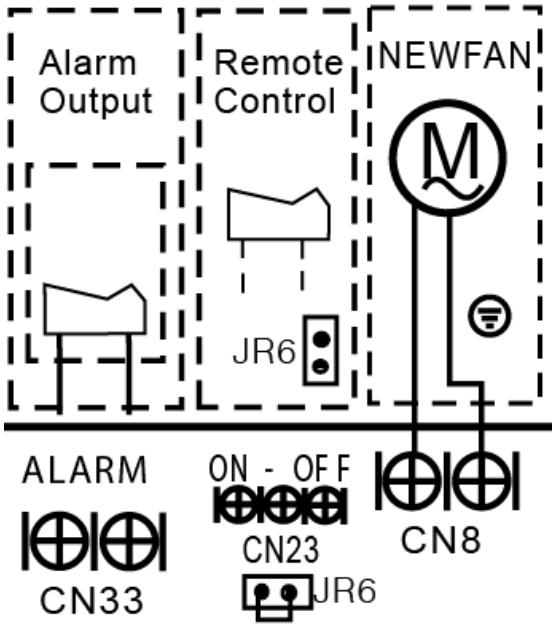

C. For new fresh motor terminal port CN8

1. Connect the fan motor to the port , no need care L/N of the motor ;
2. The output voltage is the power supply;
3. The fresh motor can not excess 200W or 1A , follow the smaller one ;
4. The new fresh motor will be worked when the indoor fan motor work ;when the indoor fan mo tor stops , the new fresh motor would be stopped ;
5. When the unit enter force cooling mode or capacity testing mode , the fresh motor isn't work .

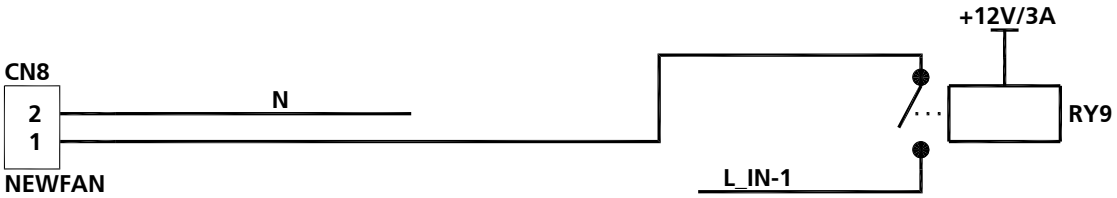

10.2 **Micro-Switch Introduce:**

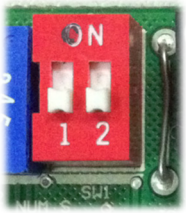

Anti-cold air	
SW1	FAN MOTOR STOP-TEM
ON 1 2	24 Factory setting
ON 1 2	15
ON 1 2	8
ON 1 2	According to the EEPROM setting

A. Micro-switch SW1 is for selection of indoor fan stop temperature (TEL0) when it is in anti-cold wind action in heating mode.

Range: 24°C, 15°C, 8°C, According to EEROM setting (reserved for special customizing).

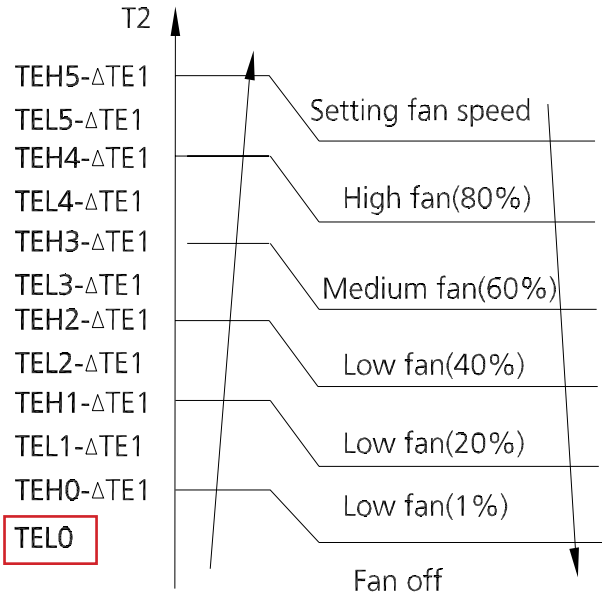

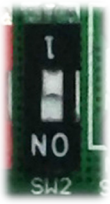

SW2 / SW2-1	SWITCH	FOR FAN MOTER CONTROL THEN NO POWER REQUEST.
ON STATE	ON	ON
MODE	FAN OFF	FAN ON
Factory Setting	✓	

B.Micro-switch SW2/SW2-1 is for selection of indoor FAN ACTION if room temperature reaches the setponit and the compressor stops.

Range: OFF (anti-cold wind is available in heating mode), Keep running (No anti-cold wind function).

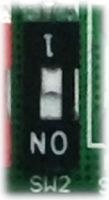

SW2-2	SWITCH	BREEZELESS
STATE	ON	ON
MODE	BREEZE LESS OFF	BREEZE LESS ON
Factory Setting	✓	

C.Micro-switch SW2-2 is for selection of Breezeless function.
Range: OFF, ON.



SW3	SWITCH	FOR AUTO-RESTART SETTING
STATE	ON	ON
MODE	REMEMBER	NO_REMEMBER
Factory Setting	✓	

D.Micro-switch SW3 is for selection of auto-restart function.
Range: Active, inactive



SW5	SWITCH	FOR MODE-PRIOR SETTING			
STATE	ON	ON	ON	ON	ON
MODE	HEAT	HEAT	COOL	COOL	
Factory Setting	✓				

E. Micro-switch SW5 is for setting mode priority of multi connection.
Range: Heat, cool.

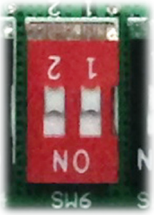

SW6	SWITCH	FOR TEMP.COMPENSATION			
STATE	ON	ON	ON	ON	ON
VALUE	6	4	2	E function	
Factory Setting	✓				

F.Micro-switch SW6 is for selection of temperature compensation in heating mode. This helps to reduce the real temperature difference between ceiling and floor so that the unit could run properly.

If the height of installation is lower, smaller value could be chosen.

Range: 6°C, 4°C, 2°C, E function (reserved for special customizing)

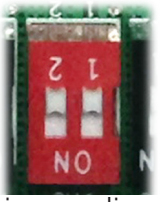

SW7	SWITCH	FOR COOLING & HEATING OR COOLING ONLY SETTING
STATE	ON	ON / ON
MODE		COOLING& HEATING / COOLING ONLY
Factory Setting		✓

G.Micro-switch SW7 is for setting cooling &heating or cooling only.

Range: cooling &heating, cooling.

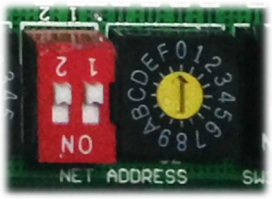

SWITCH	FOR CCM UNIT ADDRESS	
S2 + S1		
ADDRESS	0~15	16~31
Factory Setting	✓	
S2 + S1		
ADDRESS	32~47	48~63
Factory Setting		

H.Micro-switch S1 and dial-switch S2 are for address setting when you want to control this unit by a central controller.

Range: 00-63



FOR SETTING POWER(DC MOTOR MODEL ONLY)										
ENC1										
CODE	0	1	2	4	5	7	8	9	A	B
POWER	20	26	32~35	36~53	54~71	72~90	91~105	106~140	141~160	161~200
FACTORY SETTING	ACCORDING TO RELATED MODEL.									

I. Dial-switch ENC1: The indoor PCB is universal designed for whole series units from 7K to 68K. This ENC1 setting will tell the main program what size the unit is.

NOTE: Usually there is glue on it because the switch position cannot be changed at random unless you want to use this PCB as a spare part to use in another unit. Then you have to select the right position to match the size of the unit.

“20” means 2kW (7K),“105” means 10.5kW(36K), and so on.

Indoor Unit-A6 Duct

Contents

1. Feature....2
2. Dimensional Drawings....4
3. Part names....5
4. Service Place....5
5. Accessories....6
6. Fan Performance....7
7. Capacity Tables....13
8. Noise Criterion Curves....40
9. Electrical Characteristics....43
10. Electrical Wiring Diagrams....44

1. Feature

1.1 Eccentric Fan Design

New eccentric fan design improves the airflow at the air outlet, resulting better performance.

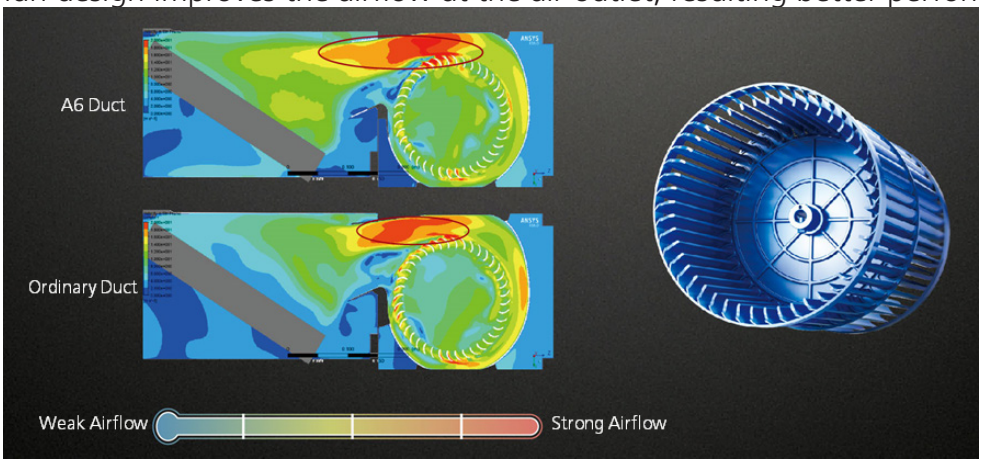

1.2 Slim Design

The industry lowest height is designed to be fitted into tight roof space.

1.3 Flexible Air Intake

The frame size of air inlet in rear and bottom is the same. It's very easy to switch to match different applications.

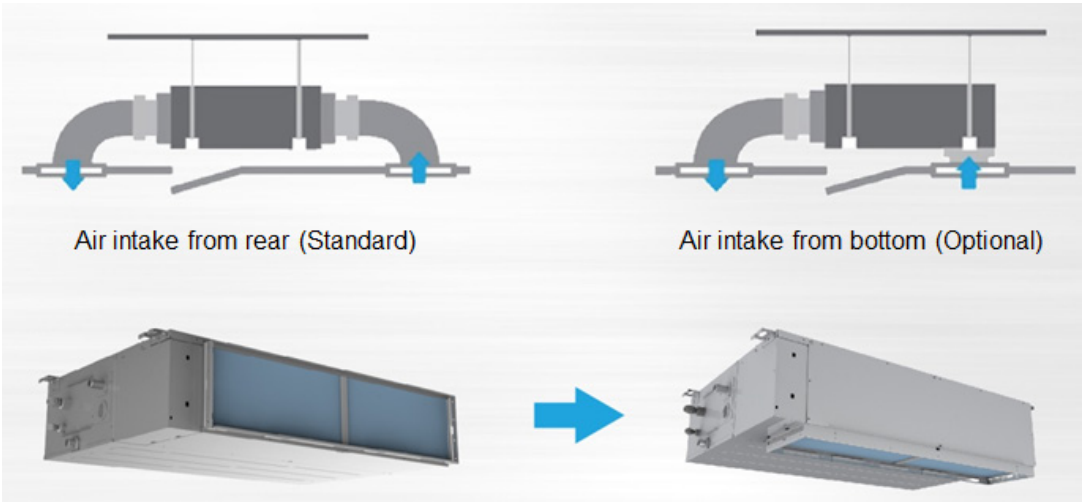

1.4 Built-in Drain Pump

The built-in drain pump can lift condensing water up to 750mm.

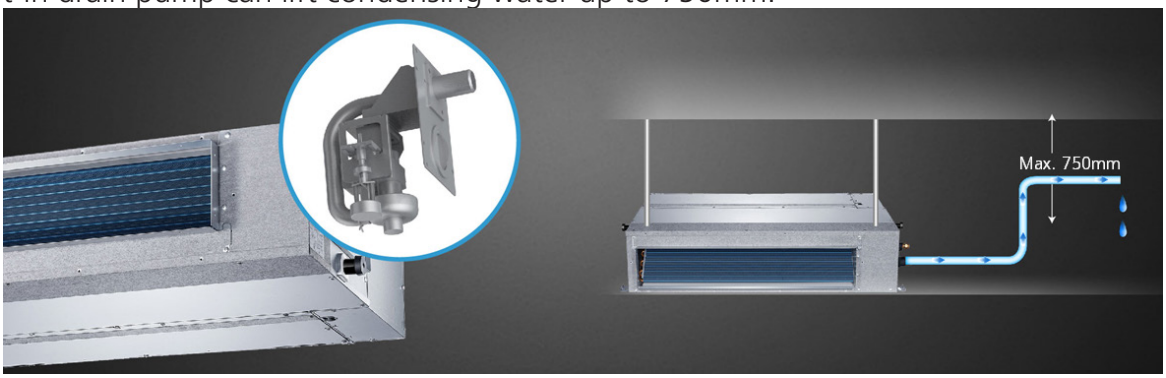

1.5 Easy Clean

You can pull out the filter from left, right, or from the bottom for easy cleaning.

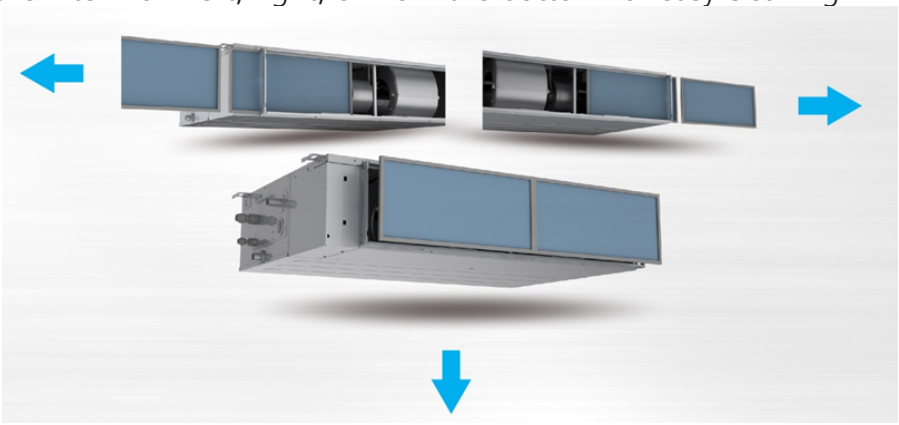

2. Dimensional Drawings

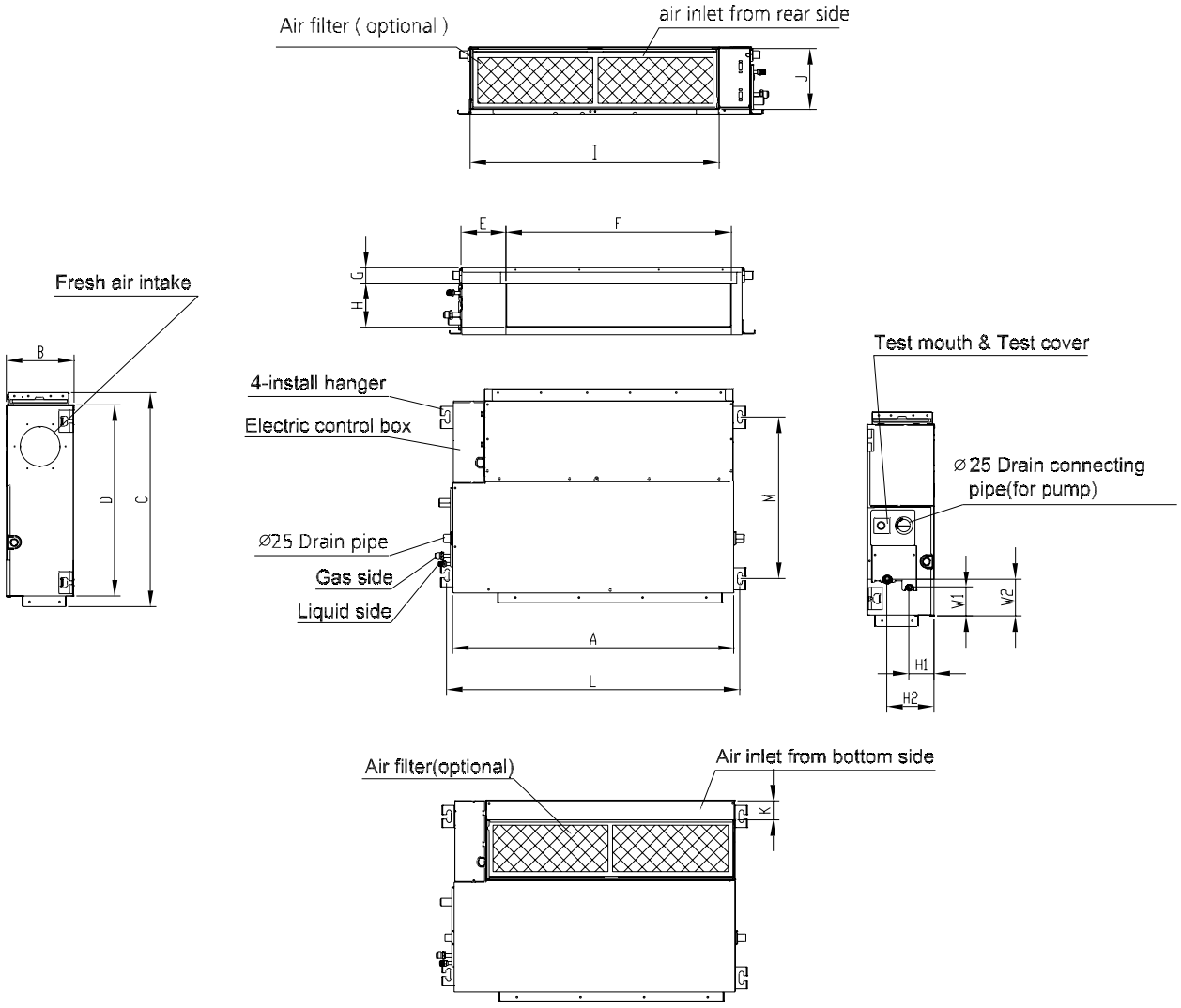

Model (KBtu/h)	unit	A	B	C	D	E	F	G	H	I	J	K	L	M	H1	H2	W1	W2
12	mm	700	200	506	450	137	537	30	152	599	186	50	741	360	84	140	84	84
	inch	27.56	7.87	19.92	17.72	5.39	21.14	1.18	5.98	23.58	7.32	1.97	29.17	14.17	3.31	5.51	3.31	3.31
18	mm	880	210	674	600	140	706	50	136	782	190	40	920	508	78	148	88	112
	inch	34.65	8.27	26.54	23.62	5.51	27.8	1.97	5.35	30.79	7.48	1.57	36.22	20	3.07	5.83	3.46	4.41
24	mm	1100	249	774	700	140	926	50	175	1001	228	5	1140	598	80	150	130	155
	inch	43.31	9.80	30.47	27.56	5.51	36.46	1.97	6.89	39.41	8.98	0.2	44.88	23.54	3.15	5.91	5.12	6.10
30~36	mm	1360	249	774	700	140	1186	50	175	1261	228	5	1400	598	80	150	130	155
	inch	53.54	9.80	30.47	27.56	5.51	46.69	1.97	6.89	49.65	8.98	0.2	55.12	23.54	3.15	5.91	5.12	6.10
42~55	mm	1200	300	874	800	123	1044	50	227	1101	280	5	1240	697	80	150	185	210
	inch	47.24	11.81	34.41	31.5	4.84	41.1	1.97	8.94	43.35	11.02	0.2	48.82	27.44	3.15	5.91	7.28	8.27

3. Part names

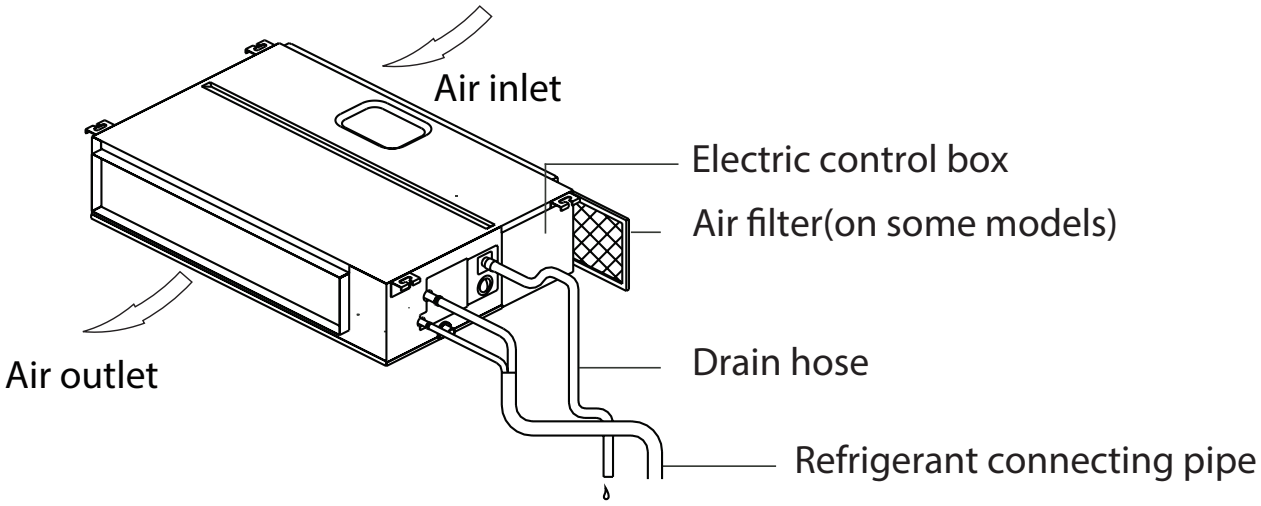

4. Service Place

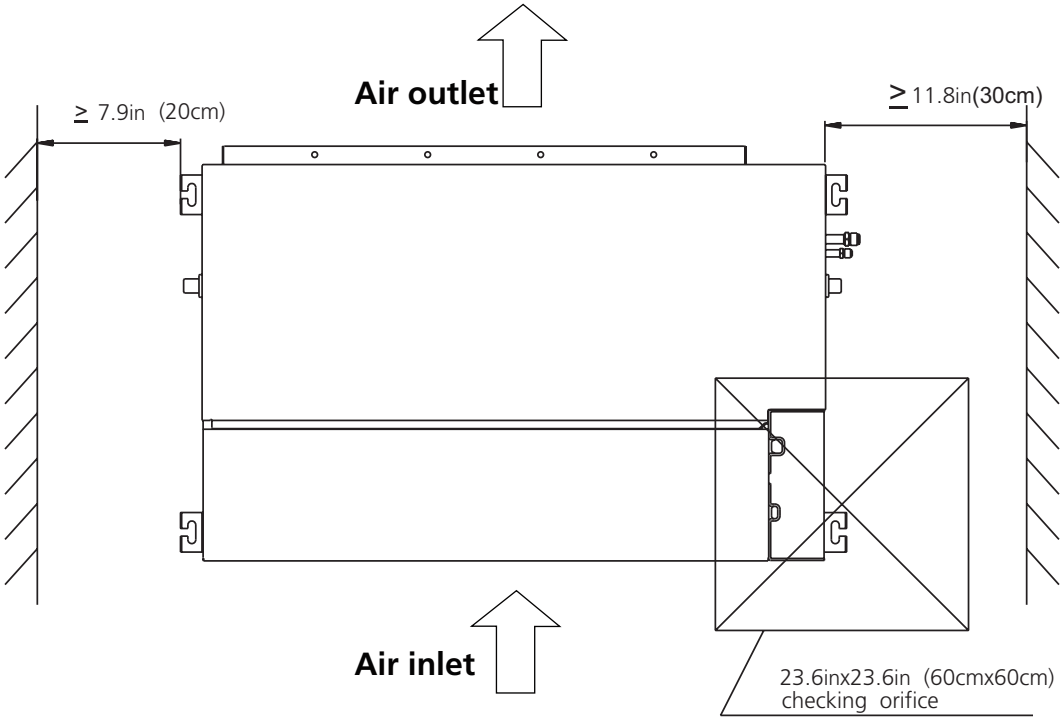

5. Accessories

The air conditioning system comes with the following accessories. Use all of the installation parts and accessories to install the air conditioner. Improper installation may result in water leakage, electrical shock and fire, or equipment failure.

	Name	Shape	Quantity
Tubing & Fittings	Soundproof / insulation sheath	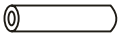	2
	Seal sponge (some models)		1
	Orifice (some models)	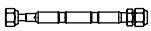	1
Drainpipe Fittings (for cooling & heating)	Drain joint (some models)		1
	Seal ring (some models)		1
EMC Magnetic Ring (some models)	Magnetic ring(Wrap the electric wires S1 & S2 (P & Q & E) around the magnetic ring twice)	 S1&S2(P&Q&E)	1
	Magnetic ring(Hitch on the connective cable between the indoor unit and outdoor unit after installation.)		1
Others	Owner's manual&Installation manual	-	1
	Transfer connector(Φ12.7-Φ15.9)/(Φ0.5in-Φ0.63in)(Packed with the indoor unit) NOTE: Pipe size may differ from appliance to appliance. To meet different pipe size requirements, sometimes the pipe connections need a transfer connector installed on the outdoor unit.	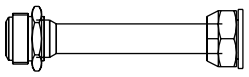	1 (on some models)
	Transfer connector(Φ6.35-Φ9.52)/(Φ0.25in-Φ0.375in)(Packed with the indoor unit) NOTE: Pipe size may differ from appliance to appliance. To meet different pipe size requirements, sometimes the pipe connections need a transfer connector installed on the outdoor unit.	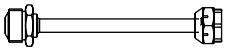	1 (on some models)
	Transfer connector(Φ9.52-Φ12.7)/(Φ0.375in-Φ0.5in)(Packed with the indoor unit) NOTE: Pipe size may differ from appliance to appliance. To meet different pipe size requirements, sometimes the pipe connections need a transfer connector installed on the outdoor unit.	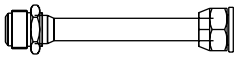	1 (on some models)
	Connecting wire for display (2m)	-	1(on some models)
	Cord protection rubber ring		1(on some models)
	Display panel *Just for testing purposes only	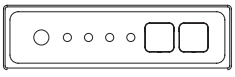	1(on some models)

Optional accessories:

- There are two types of remote controls: wired and wireless.
- Select a remote controller based on customer preferences and requirements and install in an appropriate place.
- Refer to catalogues and technical literature for guidance on selecting a suitable remote controller.

6. Fan Performance

12K

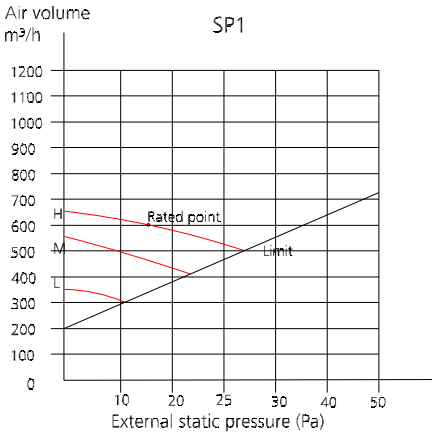

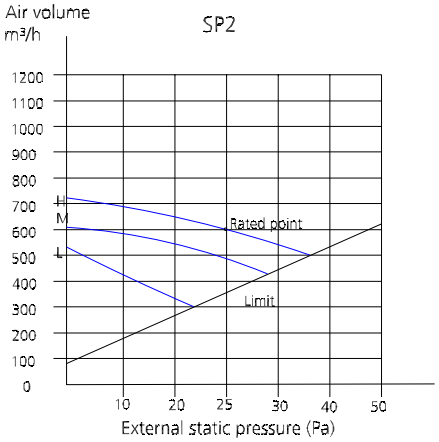

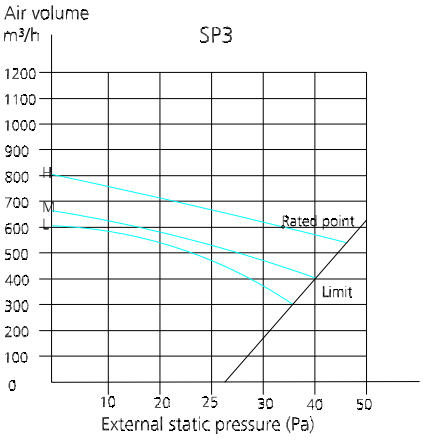

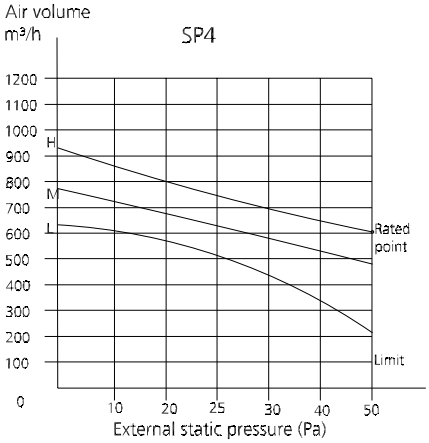

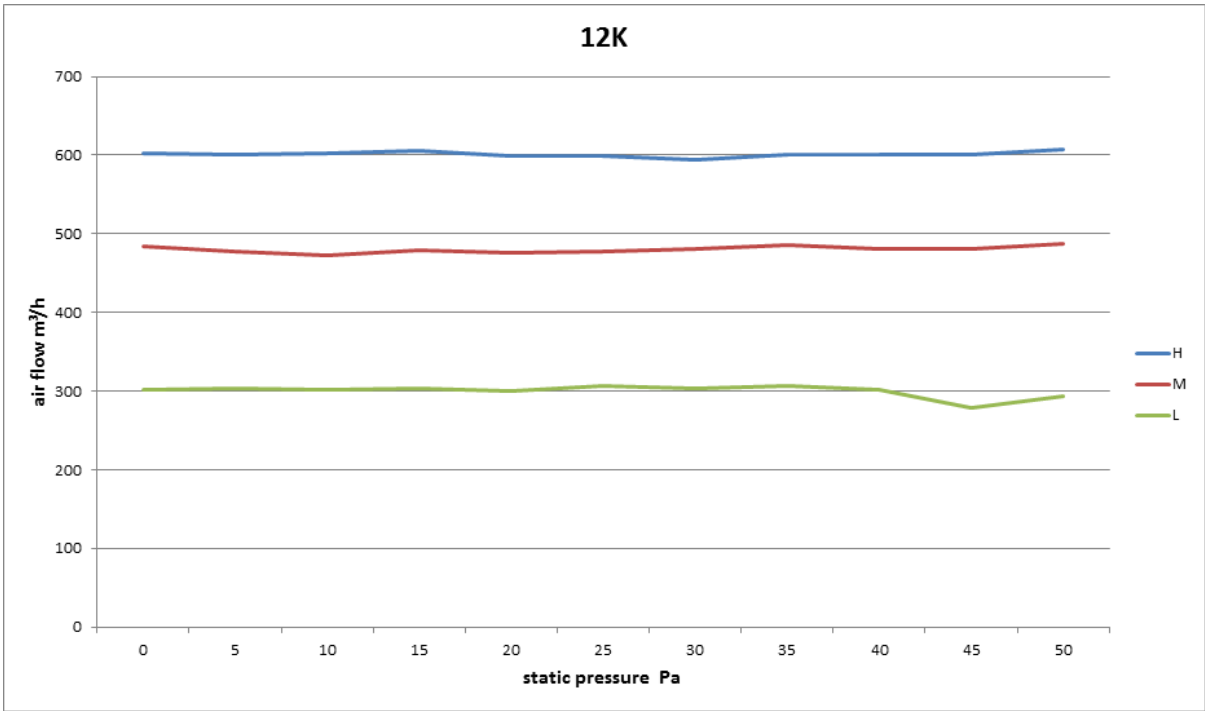

18K

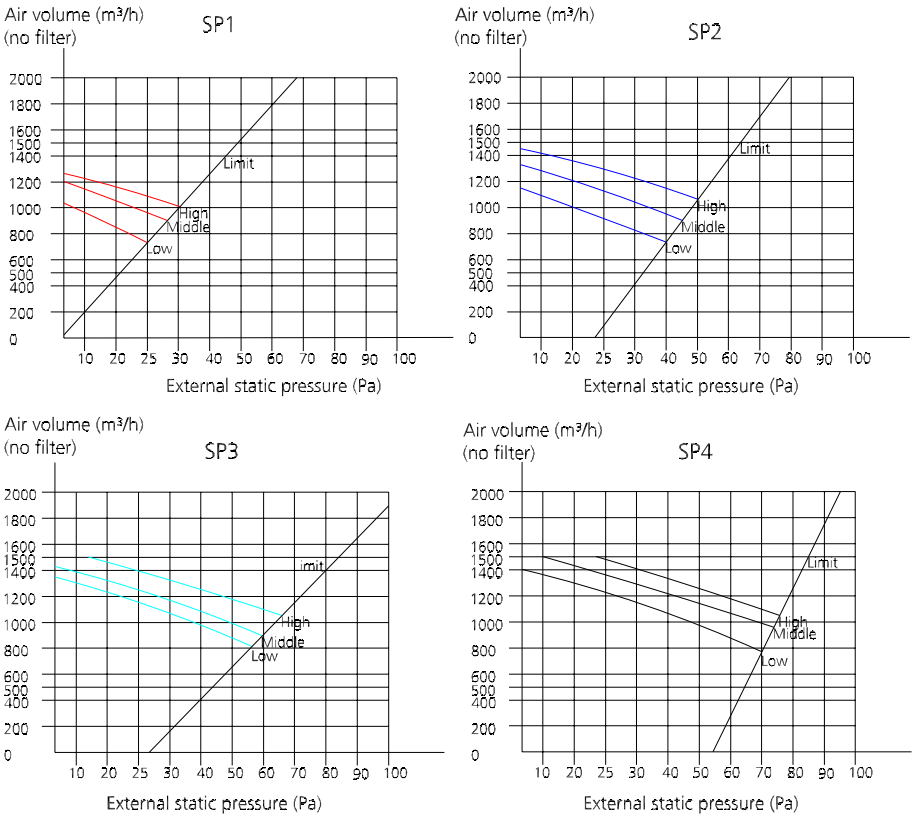
Air volume (m³/h)
(no filter)
SP1
Limit
High
Middle
Low
External static pressure (Pa)
Air volume (m³/h)
(no filter)
SP2
Limit
High
Middle
Low
External static pressure (Pa)
Air volume (m³/h)
(no filter)
SP3
High
Middle
Low
External static pressure (Pa)
Air volume (m³/h)
(no filter)
SP4
Limit
High
Middle
Low
External static pressure (Pa)

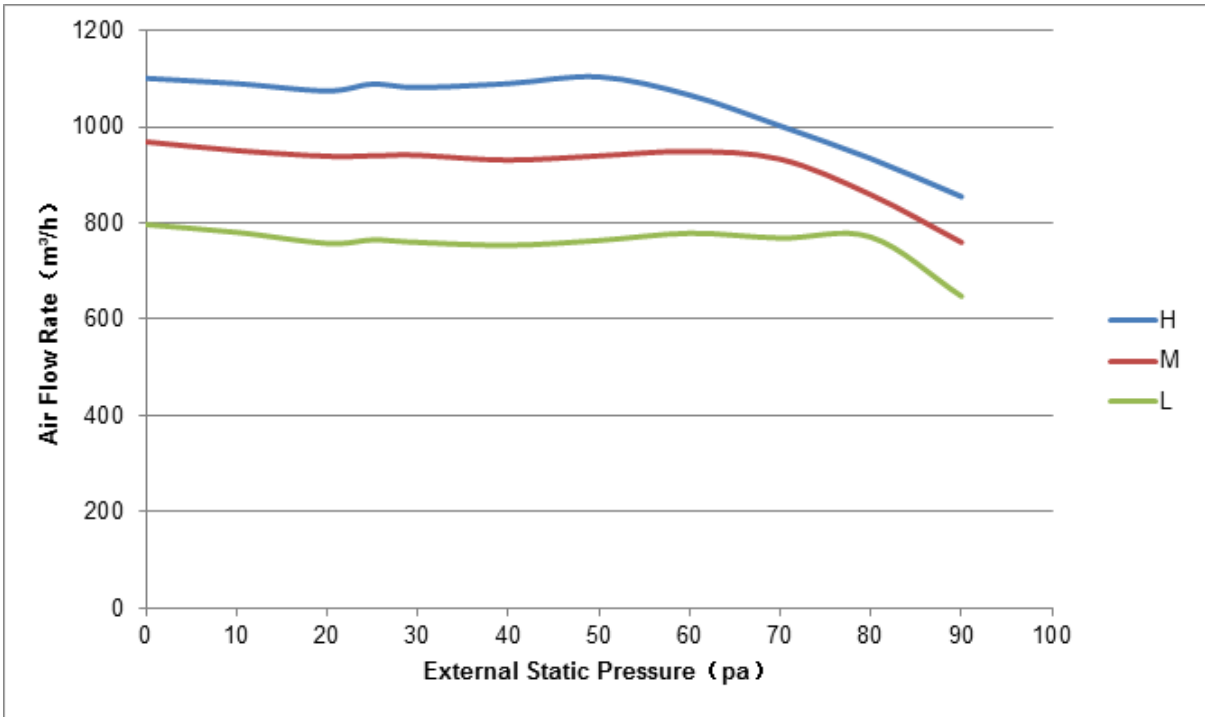
Air Flow Rate（m³/h）
External Static Pressure（pa）
H
M
L

24K

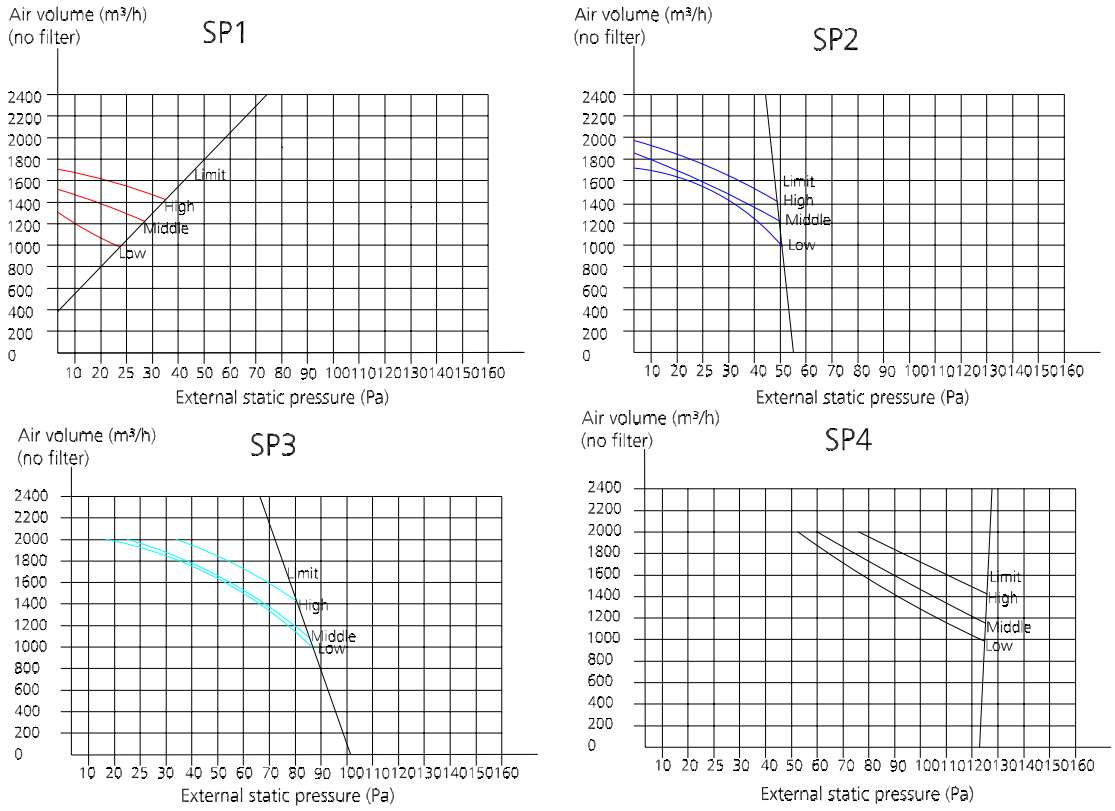
Air volume (m³/h)
(no filter)
SP1
Limit
High
Middle
Low
External static pressure (Pa)
SP2
SP3
SP4

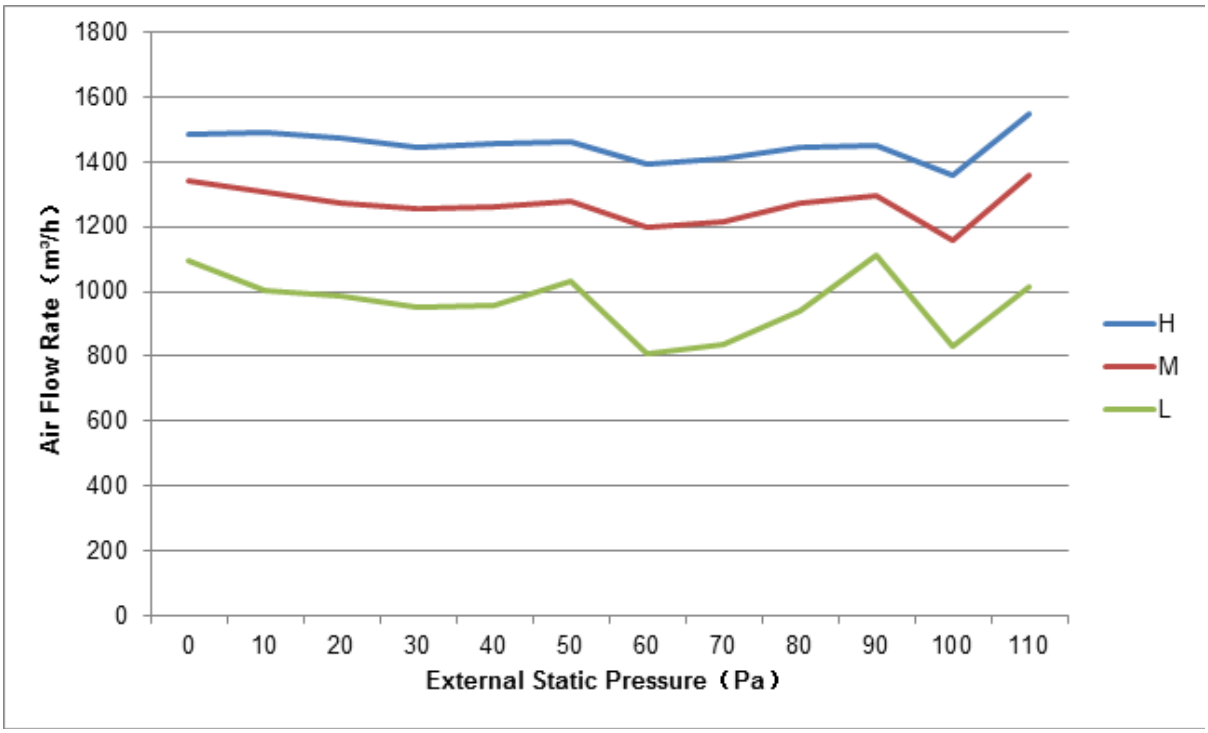
Air Flow Rate（m³/h）
External Static Pressure（Pa）
H
M
L

30K/36K

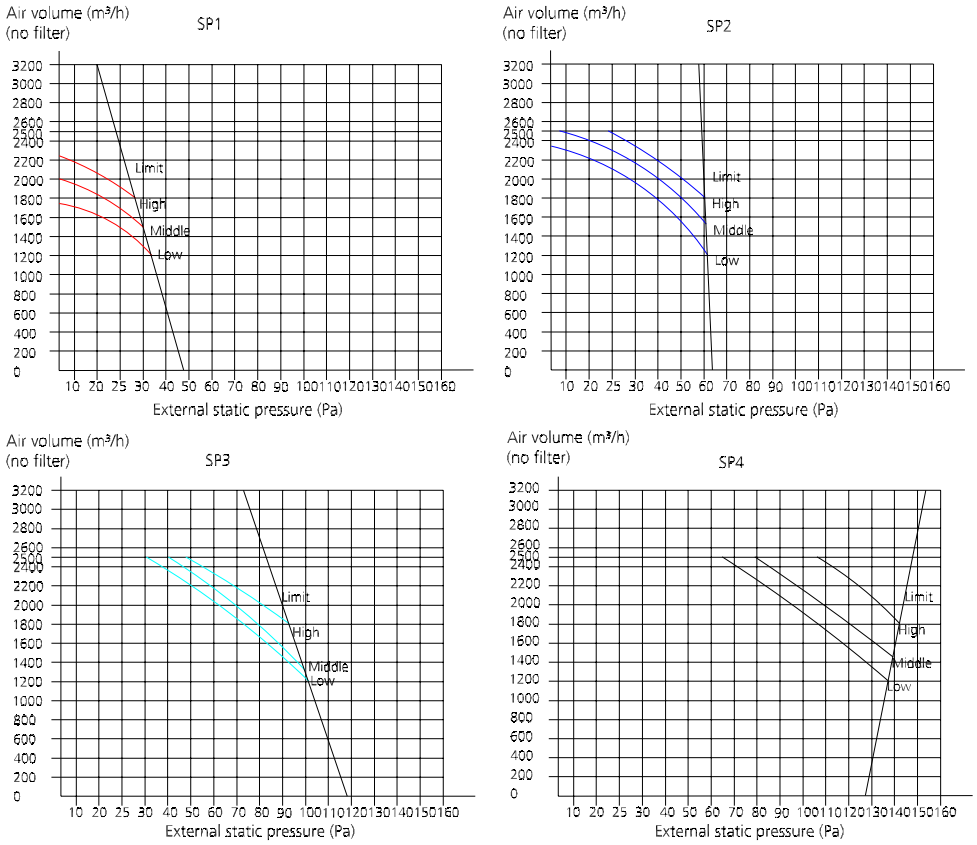
Air volume (m³/h)
(no filter)
SP1
Limit
High
Middle
Low
External static pressure (Pa)
Air volume (m³/h)
(no filter)
SP2
Limit
High
Middle
Low
External static pressure (Pa)
Air volume (m³/h)
(no filter)
SP3
Limit
High
Middle
Low
External static pressure (Pa)
Air volume (m³/h)
(no filter)
SP4
Limit
High
Middle
Low
External static pressure (Pa)

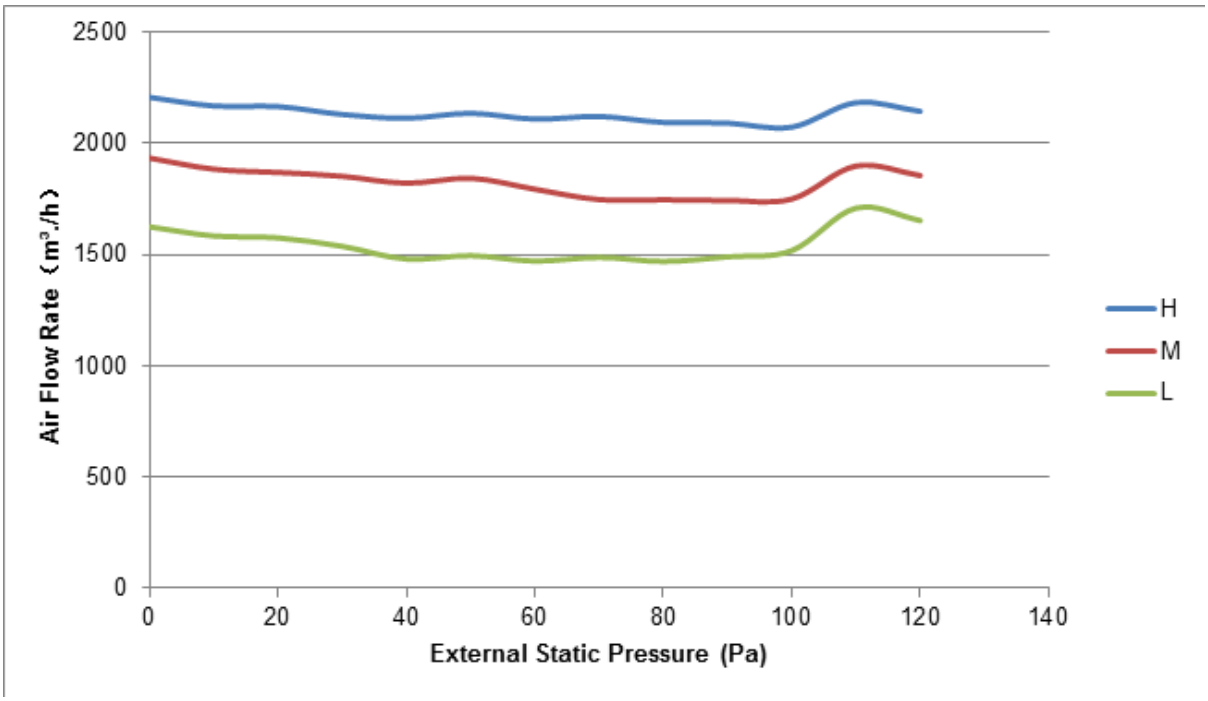
Air Flow Rate (m³/h)
External Static Pressure (Pa)
H
M
L

42K/48K

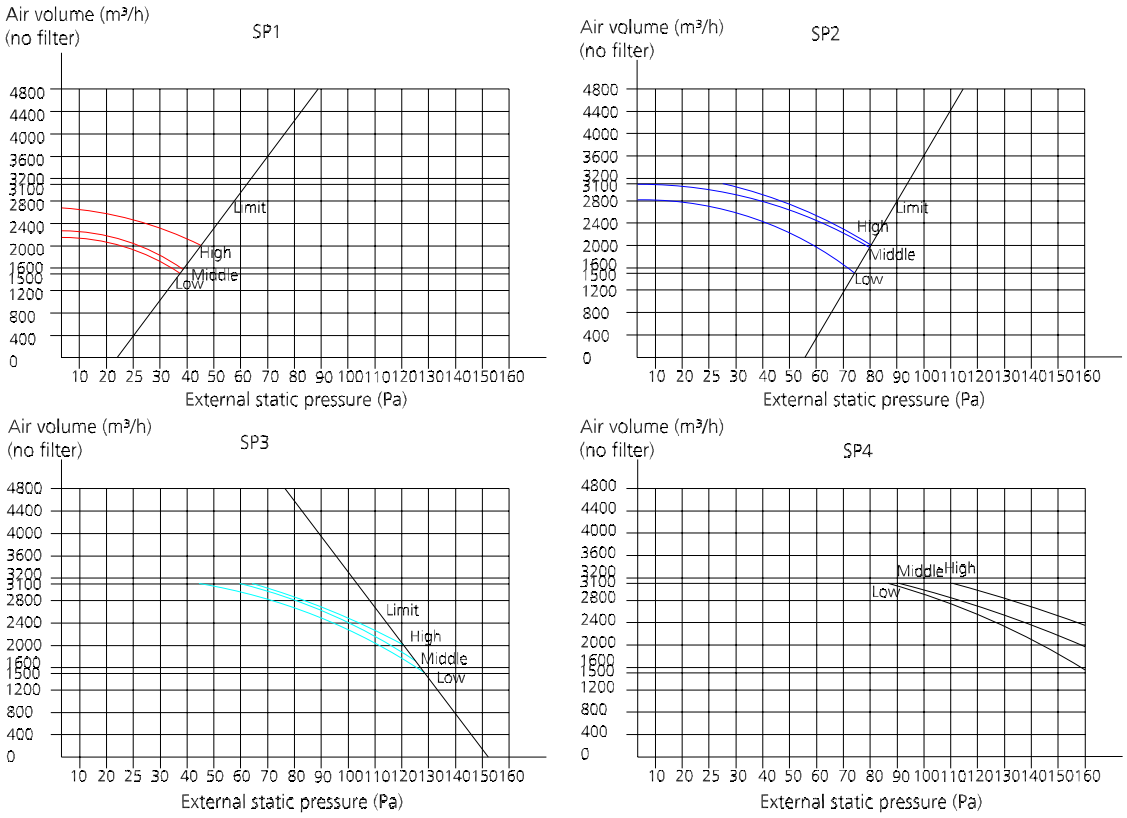
Air volume (m³/h)
(no filter)
SP1
Limit
High
Middle
Low
External static pressure (Pa)
Air volume (m³/h)
(no filter)
SP2
Limit
High
Middle
Low
External static pressure (Pa)
Air volume (m³/h)
(no filter)
SP3
Limit
High
Middle
Low
External static pressure (Pa)
Air volume (m³/h)
(no filter)
SP4
Middle
High
Low
External static pressure (Pa)

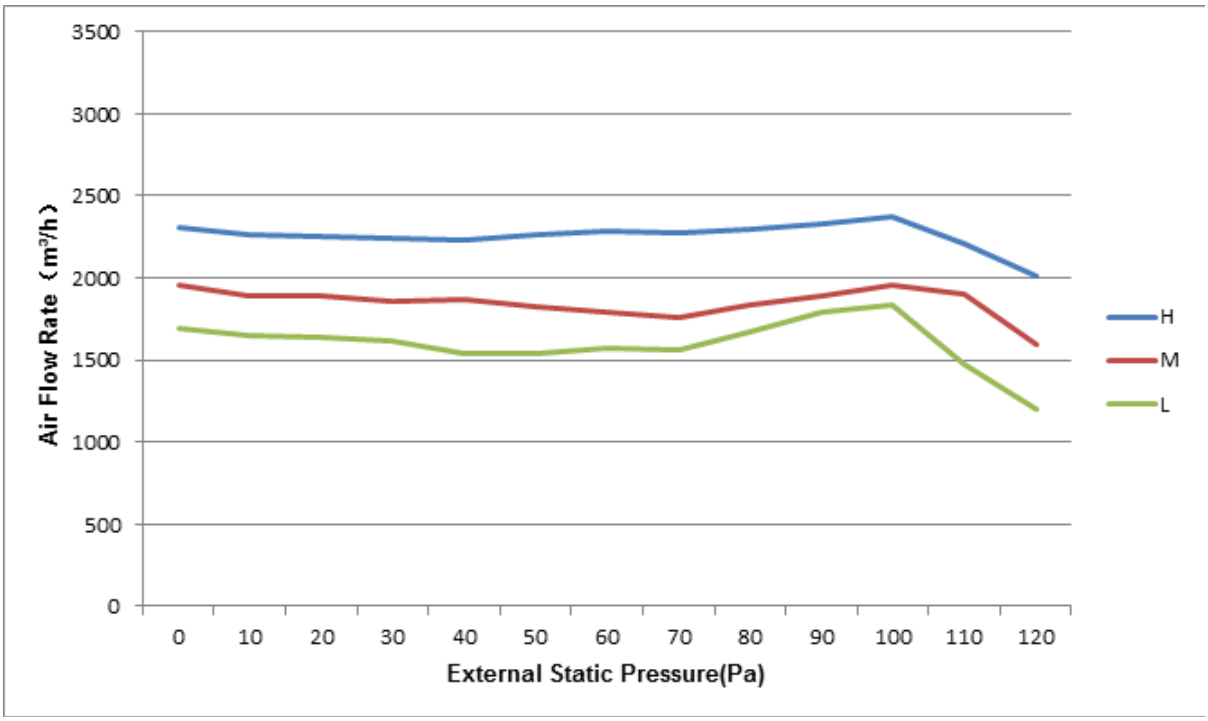
Air Flow Rate (m³/h)
External Static Pressure(Pa)
H
M
L

55K

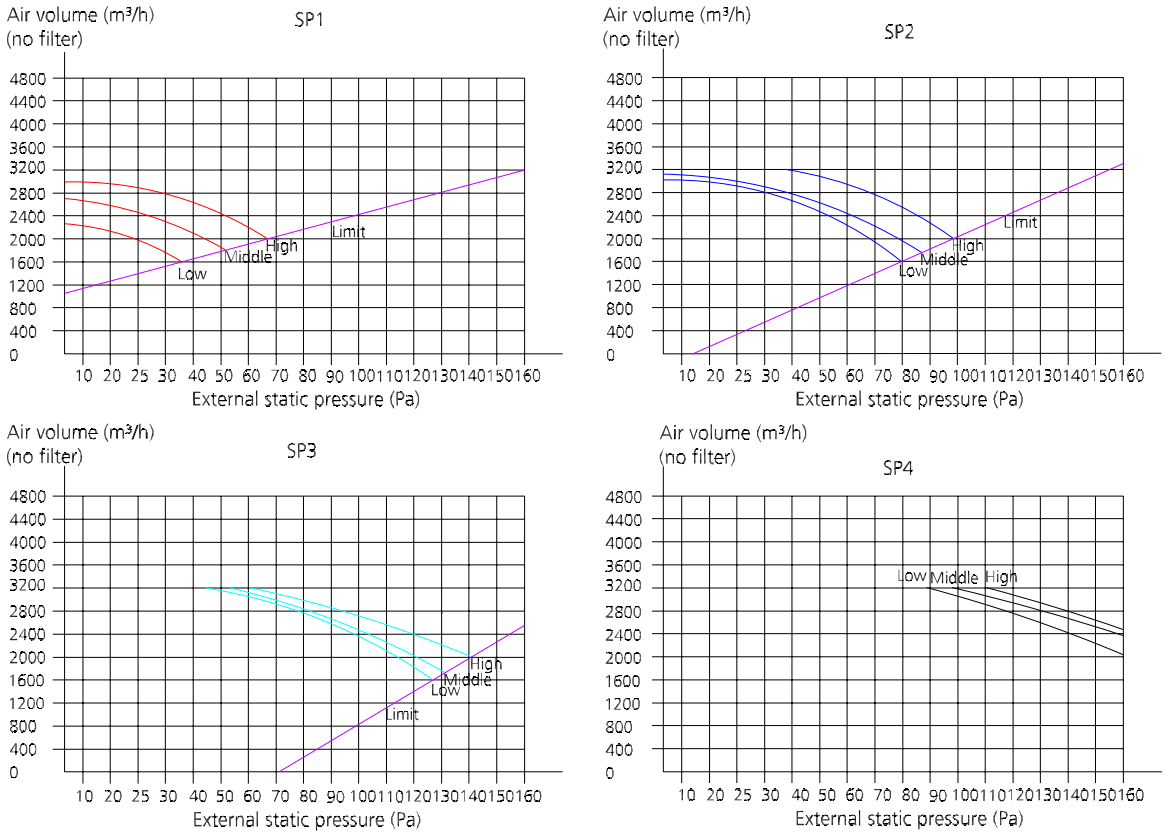
Air volume (m³/h)
(no filter)
SP1
4800
4400
4000
3600
3200
2800
2400
2000
1600
1200
800
400
0
Low
Middle
High
Limit
10 20 25 30 40 50 60 70 80 90 100 110 120 130 140 150 160
External static pressure (Pa)
Air volume (m³/h)
(no filter)
SP2
Low
Middle
High
Limit
External static pressure (Pa)
Air volume (m³/h)
(no filter)
SP3
High
Middle
Low
Limit
External static pressure (Pa)
Air volume (m³/h)
(no filter)
SP4
Low
Middle
High
External static pressure (Pa)

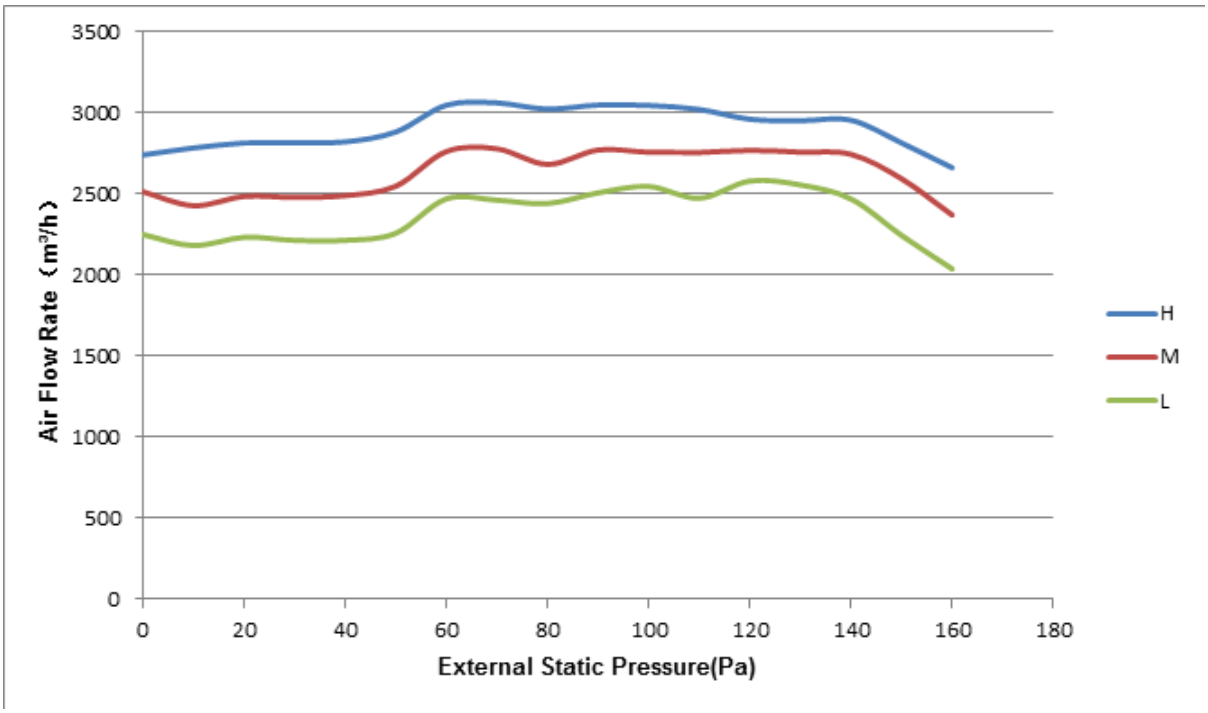
Air Flow Rate（m³/h）
3500
3000
2500
2000
1500
1000
500
0
0 20 40 60 80 100 120 140 160 180
External Static Pressure(Pa)
H
M
L

7. Capacity Tables

7.1 Cooling

12k																		
INDOOR AIRFLOW (CMH)	OUTDOOR DB(℃)	ID WB (℃)	16.0				18.0				19.0				22.0			
		ID DB (℃)	23.0	25.0	27.0	29.0	23.0	25.0	27.0	29.0	23.0	25.0	27.0	29.0	23.0	25.0	27.0	29.0
300	-15	TC	3.71	3.72	3.72	3.72	3.90	3.96	3.96	3.96	4.00	4.00	4.00	4.00	4.25	4.25	4.25	4.25
		S/T	0.65	0.70	0.76	0.81	0.55	0.60	0.66	0.70	0.50	0.55	0.60	0.66	0.39	0.43	0.48	0.53
		PI	0.70	0.70	0.70	0.70	0.69	0.69	0.69	0.69	0.70	0.70	0.70	0.70	0.70	0.70	0.70	0.70
	-10	TC	3.68	3.70	3.70	3.70	3.87	3.93	3.93	3.93	3.98	3.98	3.98	3.98	4.23	4.23	4.23	4.23
		S/T	0.65	0.71	0.77	0.82	0.55	0.61	0.66	0.71	0.50	0.55	0.60	0.66	0.39	0.44	0.49	0.53
		PI	0.70	0.70	0.70	0.70	0.69	0.69	0.69	0.69	0.69	0.69	0.69	0.69	0.70	0.70	0.70	0.70
	-5	TC	3.66	3.67	3.67	3.67	3.86	3.92	3.92	3.92	3.96	3.96	3.96	3.96	4.22	4.22	4.22	4.22
		S/T	0.65	0.71	0.77	0.82	0.56	0.61	0.66	0.71	0.51	0.56	0.60	0.66	0.39	0.44	0.49	0.54
		PI	0.69	0.70	0.70	0.69	0.69	0.69	0.69	0.69	0.69	0.69	0.69	0.69	0.70	0.70	0.70	0.70
	0	TC	3.64	3.66	3.66	3.66	3.85	3.91	3.91	3.91	3.95	3.95	3.95	3.95	4.22	4.22	4.22	4.22
		S/T	0.66	0.72	0.77	0.82	0.56	0.61	0.67	0.72	0.51	0.56	0.61	0.67	0.39	0.44	0.49	0.54
		PI	0.70	0.70	0.70	0.70	0.69	0.69	0.69	0.69	0.70	0.70	0.70	0.70	0.70	0.70	0.70	0.70
	5	TC	3.62	3.64	3.64	3.64	3.83	3.89	3.89	3.89	3.94	3.94	3.94	3.94	4.21	4.21	4.21	4.21
		S/T	0.66	0.72	0.78	0.83	0.56	0.61	0.67	0.72	0.51	0.56	0.61	0.67	0.39	0.44	0.49	0.54
		PI	0.70	0.71	0.71	0.70	0.70	0.70	0.70	0.70	0.70	0.70	0.70	0.70	0.71	0.71	0.71	0.71
	10	TC	3.60	3.61	3.61	3.61	3.81	3.87	3.87	3.87	3.92	3.92	3.92	3.92	4.20	4.20	4.20	4.20
		S/T	0.66	0.72	0.78	0.83	0.56	0.62	0.67	0.72	0.51	0.56	0.61	0.67	0.40	0.45	0.50	0.54
		PI	0.72	0.72	0.72	0.72	0.71	0.71	0.71	0.71	0.71	0.71	0.71	0.71	0.72	0.72	0.72	0.72
	15	TC	3.57	3.59	3.59	3.59	3.79	3.85	3.85	3.85	3.90	3.90	3.90	3.90	4.19	4.19	4.19	4.19
		S/T	0.67	0.73	0.79	0.84	0.57	0.62	0.68	0.73	0.52	0.57	0.62	0.68	0.40	0.45	0.50	0.55
		PI	0.73	0.74	0.74	0.73	0.73	0.73	0.73	0.73	0.73	0.73	0.73	0.73	0.73	0.73	0.73	0.73
	20	TC	3.53	3.54	3.54	3.54	3.75	3.75	3.75	3.75	3.86	3.86	3.86	3.86	4.15	4.15	4.15	4.15
		S/T	0.67	0.73	0.79	0.84	0.57	0.62	0.68	0.73	0.52	0.57	0.62	0.68	0.40	0.45	0.50	0.55
		PI	0.76	0.76	0.76	0.76	0.75	0.75	0.75	0.75	0.75	0.75	0.75	0.75	0.75	0.75	0.75	0.75
	25	TC	3.37	3.37	3.37	3.37	3.57	3.57	3.57	3.57	3.69	3.69	3.69	3.69	3.98	3.98	3.98	3.98
		S/T	0.68	0.74	0.80	0.86	0.57	0.63	0.68	0.74	0.52	0.57	0.63	0.68	0.40	0.45	0.50	0.55
		PI	0.83	0.83	0.83	0.83	0.83	0.83	0.83	0.83	0.83	0.83	0.83	0.83	0.83	0.83	0.83	0.83
	30	TC	3.20	3.20	3.20	3.20	3.43	3.43	3.43	3.43	3.52	3.52	3.52	3.52	3.80	3.80	3.80	3.80
		S/T	0.68	0.74	0.81	0.87	0.57	0.63	0.69	0.74	0.52	0.57	0.63	0.69	0.39	0.45	0.50	0.55
		PI	0.92	0.92	0.92	0.92	0.92	0.92	0.92	0.92	0.92	0.92	0.92	0.92	0.92	0.92	0.92	0.92
	35	TC	3.05	3.05	3.05	3.05	3.26	3.26	3.26	3.26	3.34	3.34	3.40	3.34	3.60	3.60	3.60	3.60
		S/T	0.68	0.75	0.82	0.88	0.57	0.63	0.69	0.75	0.51	0.57	0.63	0.69	0.39	0.44	0.50	0.56
		PI	1.00	1.00	1.00	1.00	1.01	1.01	1.01	1.01	1.01	1.01	1.01	1.01	1.02	1.02	1.02	1.02
	40	TC	2.89	2.89	2.89	2.91	3.09	3.09	3.09	3.09	3.18	3.18	3.21	3.18	3.43	3.43	3.43	3.43
		S/T	0.69	0.77	0.84	0.91	0.57	0.64	0.71	0.77	0.51	0.58	0.64	0.71	0.38	0.44	0.50	0.56
		PI	1.10	1.10	1.10	1.10	1.11	1.11	1.11	1.11	1.11	1.11	1.11	1.11	1.12	1.12	1.12	1.12
	46	TC	2.67	2.67	2.67	2.70	2.87	2.87	2.87	2.87	2.96	2.96	2.96	2.96	3.19	3.19	3.19	3.19
		S/T	0.70	0.78	0.85	0.92	0.57	0.64	0.71	0.78	0.51	0.58	0.65	0.72	0.38	0.44	0.50	0.57
		PI	1.23	1.23	1.23	1.23	1.23	1.23	1.23	1.23	1.23	1.23	1.23	1.23	1.24	1.24	1.24	1.24
	50	TC	2.53	2.53	2.53	2.55	2.70	2.70	2.70	2.70	2.79	2.79	2.79	2.79	3.02	3.02	3.02	3.02
		S/T	0.71	0.79	0.87	0.95	0.57	0.65	0.72	0.80	0.51	0.59	0.66	0.73	0.37	0.44	0.50	0.57
		PI	1.33	1.33	1.33	1.33	1.34	1.34	1.34	1.34	1.34	1.34	1.34	1.34	1.35	1.35	1.35	1.35

480	-15	TC	3.78	3.78	3.81	3.84	3.96	3.96	3.96	3.96	4.06	4.06	4.06	4.06	4.31	4.31	4.31	4.31
		S/T	0.70	0.79	0.98	1.00	0.56	0.65	0.72	0.81	0.50	0.58	0.66	0.73	0.35	0.42	0.49	0.57
		PI	0.72	0.72	0.72	0.72	0.72	0.72	0.72	0.72	0.72	0.72	0.72	0.72	0.71	0.71	0.71	0.71
	-10	TC	3.76	3.76	3.79	3.82	3.93	3.93	3.93	3.93	4.04	4.04	4.04	4.04	4.29	4.29	4.29	4.29
		S/T	0.71	0.80	0.99	1.00	0.56	0.65	0.73	0.82	0.50	0.58	0.66	0.74	0.35	0.43	0.49	0.57
		PI	0.71	0.71	0.71	0.71	0.72	0.72	0.72	0.72	0.72	0.72	0.72	0.72	0.71	0.71	0.71	0.71
	-5	TC	3.73	3.73	3.76	3.79	3.92	3.92	3.92	3.92	4.02	4.02	4.02	4.02	4.28	4.28	4.28	4.28
		S/T	0.71	0.80	0.99	1.00	0.57	0.65	0.73	0.82	0.51	0.59	0.66	0.74	0.35	0.43	0.50	0.58
		PI	0.71	0.71	0.71	0.71	0.71	0.71	0.71	0.71	0.72	0.72	0.72	0.72	0.71	0.71	0.71	0.71
	0	TC	3.72	3.72	3.75	3.77	3.91	3.91	3.91	3.91	4.01	4.01	4.01	4.01	4.28	4.28	4.28	4.28
		S/T	0.72	0.80	1.00	1.00	0.57	0.66	0.74	0.82	0.51	0.59	0.67	0.74	0.35	0.43	0.50	0.58
		PI	0.71	0.71	0.71	0.71	0.72	0.72	0.72	0.72	0.72	0.72	0.72	0.72	0.72	0.72	0.72	0.72
	5	TC	3.70	3.70	3.73	3.76	3.89	3.89	3.89	3.89	4.00	4.00	4.00	4.00	4.27	4.27	4.27	4.27
		S/T	0.72	0.81	1.00	1.00	0.57	0.66	0.74	0.83	0.51	0.59	0.67	0.75	0.35	0.43	0.50	0.58
		PI	0.72	0.72	0.72	0.72	0.72	0.72	0.72	0.72	0.73	0.73	0.73	0.73	0.72	0.72	0.72	0.72
	10	TC	3.67	3.67	3.70	3.73	3.87	3.87	3.87	3.87	3.98	3.98	3.98	3.98	4.26	4.26	4.26	4.26
		S/T	0.72	0.81	1.00	1.00	0.57	0.66	0.74	0.83	0.51	0.59	0.67	0.75	0.36	0.44	0.50	0.58
		PI	0.73	0.73	0.73	0.73	0.73	0.73	0.73	0.73	0.74	0.74	0.74	0.74	0.73	0.73	0.73	0.73
	15	TC	3.64	3.64	3.67	3.70	3.85	3.85	3.85	3.85	3.96	3.96	3.96	3.96	4.25	4.25	4.25	4.25
		S/T	0.73	0.82	0.90	0.99	0.58	0.67	0.75	0.84	0.52	0.60	0.68	0.76	0.36	0.44	0.51	0.59
		PI	0.75	0.75	0.75	0.75	0.75	0.75	0.75	0.75	0.75	0.75	0.75	0.75	0.75	0.75	0.75	0.75
	20	TC	3.60	3.60	3.63	3.66	3.81	3.81	3.81	3.81	3.92	3.92	3.92	3.92	4.21	4.21	4.21	4.21
		S/T	0.73	0.82	0.90	0.99	0.58	0.67	0.75	0.84	0.52	0.60	0.68	0.76	0.36	0.44	0.51	0.59
		PI	0.78	0.78	0.78	0.78	0.78	0.78	0.78	0.78	0.78	0.78	0.78	0.78	0.77	0.77	0.77	0.77
	25	TC	3.43	3.43	3.46	3.49	3.63	3.63	3.63	3.63	3.75	3.75	3.75	3.75	4.04	4.04	4.04	4.04
		S/T	0.74	0.83	0.92	1.00	0.59	0.68	0.77	0.85	0.52	0.60	0.69	0.78	0.36	0.44	0.52	0.60
		PI	0.86	0.86	0.86	0.86	0.86	0.86	0.86	0.86	0.86	0.86	0.86	0.86	0.86	0.86	0.86	0.86
	30	TC	3.26	3.26	3.29	3.32	3.49	3.49	3.49	3.49	3.57	3.57	3.57	3.57	3.86	3.86	3.86	3.86
		S/T	0.75	0.85	0.94	1.00	0.59	0.68	0.78	0.87	0.52	0.61	0.70	0.79	0.35	0.44	0.52	0.60
		PI	0.94	0.94	0.94	0.94	0.94	0.94	0.94	0.94	0.94	0.94	0.94	0.94	0.94	0.94	0.94	0.94
	35	TC	3.11	3.11	3.14	3.17	3.32	3.32	3.32	3.34	3.40	3.40	3.46	3.40	3.66	3.66	3.66	3.66
		S/T	0.76	0.86	0.96	1.00	0.60	0.69	0.79	0.89	0.52	0.62	0.71	0.81	0.35	0.44	0.53	0.61
		PI	1.03	1.03	1.03	1.03	1.03	1.03	1.03	1.03	1.03	1.03	1.04	1.03	1.03	1.03	1.03	1.03
	40	TC	2.89	2.91	2.94	2.96	3.08	3.08	3.08	3.11	3.17	3.17	3.20	3.17	3.42	3.42	3.42	3.42
		S/T	0.79	0.90	1.00	1.00	0.61	0.72	0.83	0.93	0.53	0.63	0.74	0.84	0.34	0.44	0.54	0.63
		PI	1.14	1.14	1.14	1.14	1.14	1.14	1.14	1.14	1.14	1.14	1.14	1.14	1.15	1.15	1.15	1.15
	46	TC	2.68	2.71	2.73	2.76	2.85	2.85	2.85	2.88	2.93	2.93	2.93	2.93	3.19	3.19	3.19	3.19
		S/T	0.80	0.91	1.00	1.00	0.62	0.73	0.84	0.95	0.53	0.64	0.75	0.86	0.34	0.44	0.54	0.64
		PI	1.26	1.26	1.26	1.26	1.27	1.27	1.27	1.27	1.27	1.27	1.27	1.27	1.28	1.28	1.28	1.28
	50	TC	2.51	2.53	2.56	2.59	2.68	2.68	2.68	2.71	2.76	2.76	2.76	2.79	3.02	3.02	3.02	3.02
		S/T	0.82	0.94	1.00	1.00	0.63	0.75	0.87	0.98	0.54	0.65	0.77	0.88	0.34	0.44	0.55	0.91
		PI	1.37	1.37	1.37	1.37	1.38	1.38	1.38	1.38	1.38	1.38	1.38	1.38	1.39	1.39	1.39	1.39
600	-15	TC	3.84	3.87	3.90	3.93	4.02	4.02	4.02	4.05	4.12	4.12	4.12	4.12	4.40	4.40	4.40	4.40
		S/T	0.74	0.85	1.00	1.00	0.59	0.69	0.79	0.98	0.51	0.61	0.70	0.80	0.34	0.42	0.51	0.61
		PI	0.73	0.73	0.73	0.73	0.73	0.73	0.73	0.73	0.73	0.73	0.73	0.73	0.73	0.73	0.73	0.73
	-10	TC	3.82	3.85	3.88	3.91	3.99	3.99	3.99	4.02	4.10	4.10	4.10	4.10	4.38	4.38	4.38	4.38
		S/T	0.75	0.85	1.00	1.00	0.59	0.69	0.80	0.98	0.51	0.61	0.71	0.81	0.34	0.43	0.51	0.61
		PI	0.73	0.73	0.73	0.73	0.72	0.72	0.72	0.72	0.73	0.73	0.73	0.73	0.73	0.73	0.73	0.73
	-5	TC	3.79	3.82	3.85	3.88	3.98	3.98	3.98	4.01	4.08	4.08	4.08	4.08	4.37	4.37	4.37	4.37
		S/T	0.75	0.86	1.00	1.00	0.59	0.69	0.80	0.99	0.52	0.61	0.71	0.81	0.34	0.43	0.52	0.61
		PI	0.73	0.73	0.73	0.73	0.72	0.72	0.72	0.72	0.73	0.73	0.73	0.73	0.73	0.73	0.73	0.73
	0	TC	3.77	3.80	3.83	3.86	3.96	3.96	3.96	3.99	4.07	4.07	4.07	4.07	4.37	4.37	4.37	4.37
		S/T	0.75	0.86	1.00	1.00	0.60	0.70	0.80	0.99	0.52	0.62	0.72	0.81	0.34	0.43	0.52	0.62
		PI	0.73	0.73	0.73	0.73	0.73	0.73	0.73	0.73	0.73	0.73	0.73	0.73	0.73	0.73	0.73	0.73
	5	TC	3.76	3.79	3.82	3.84	3.95	3.95	3.95	3.98	4.06	4.06	4.06	4.06	4.36	4.36	4.36	4.36
		S/T	0.76	0.87	1.00	1.00	0.60	0.70	0.81	1.00	0.52	0.62	0.72	0.82	0.34	0.43	0.52	0.62
		PI	0.74	0.74	0.74	0.74	0.73	0.73	0.73	0.73	0.73	0.73	0.73	0.73	0.74	0.74	0.74	0.74
	10	TC	3.73	3.76	3.79	3.82	3.93	3.93	3.93	3.96	4.04	4.04	4.04	4.04	4.35	4.35	4.35	4.35
		S/T	0.76	0.87	1.00	1.00	0.60	0.70	0.81	1.00	0.52	0.62	0.72	0.82	0.35	0.44	0.52	0.62
		PI	0.75	0.75	0.75	0.75	0.74	0.74	0.74	0.74	0.75	0.75	0.75	0.75	0.75	0.75	0.75	0.75
	15	TC	3.70	3.73	3.76	3.79	3.90	3.90	3.90	3.93	4.02	4.02	4.02	4.02	4.33	4.33	4.33	4.33
		S/T	0.77	0.88	0.99	1.00	0.61	0.71	0.82	0.92	0.53	0.63	0.73	0.83	0.35	0.44	0.53	0.63
		PI	0.77	0.77	0.77	0.77	0.76	0.76	0.76	0.76	0.76	0.76	0.76	0.76	0.76	0.76	0.76	0.76
	20	TC	3.66	3.69	3.72	3.75	3.86	3.86	3.86	3.89	3.98	3.98	3.98	3.98	4.30	4.30	4.30	4.30
		S/T	0.77	0.88	0.99	1.00	0.61	0.71	0.82	0.92	0.53	0.63	0.73	0.83	0.35	0.44	0.53	0.63
		PI	0.80	0.80	0.80	0.80	0.79	0.79	0.79	0.79	0.79	0.79	0.79	0.79	0.79	0.79	0.79	0.79
	25	TC	3.49	3.52	3.55	3.57	3.69	3.69	3.69	3.72	3.81	3.81	3.81	3.81	4.09	4.09	4.09	4.09
		S/T	0.79	0.90	1.00	1.00	0.61	0.72	0.83	0.94	0.53	0.64	0.74	0.85	0.34	0.44	0.54	0.64
		PI	0.88	0.88	0.88	0.88	0.88	0.88	0.88	0.88	0.88	0.88	0.88	0.88	0.88	0.88	0.88	0.88
	30	TC	3.32	3.34	3.37	3.40	3.55	3.55	3.55	3.57	3.63	3.63	3.63	3.63	3.92	3.92	3.92	3.92
		S/T	0.80	0.92	1.00	1.00	0.62	0.73	0.85	0.96	0.53	0.65	0.76	0.87	0.34	0.44	0.55	0.65
		PI	0.95	0.95	0.95	0.95	0.95	0.95	0.95	0.95	0.95	0.95	0.95	0.95	0.96	0.96	0.96	0.96
	35	TC	3.14	3.17	3.20	3.23	3.37	3.37	3.37	3.40	3.46	3.46	**3.52**	3.55	3.75	3.75	3.75	3.75
		S/T	0.82	0.95	1.00	1.00	0.63	0.75	0.87	0.98	0.54	0.66	**0.77**	0.88	0.34	0.44	0.55	0.66
		PI	1.04	1.04	1.04	1.04	1.05	1.05	1.05	1.05	1.05	1.05	**1.05**	1.05	1.06	1.06	1.06	1.06
	40	TC	2.92	2.95	2.98	3.01	3.14	3.14	3.15	3.18	3.22	3.22	3.25	3.28	3.50	3.50	3.50	3.50
		S/T	0.85	0.99	1.00	1.00	0.65	0.78	0.91	1.00	0.55	0.68	0.80	0.93	0.33	0.45	0.57	0.90
		PI	1.15	1.15	1.15	1.15	1.16	1.16	1.16	1.16	1.16	1.16	1.16	1.16	1.17	1.17	1.17	1.17
	46	TC	2.71	2.73	2.76	2.79	2.90	2.90	2.93	2.96	2.99	2.99	2.99	3.02	3.25	3.25	3.25	3.25
		S/T	0.87	1.00	1.00	1.00	0.65	0.79	0.92	1.00	0.56	0.69	0.82	0.95	0.33	0.45	0.57	0.92
		PI	1.28	1.28	1.28	1.28	1.29	1.29	1.29	1.29	1.29	1.29	1.29	1.29	1.30	1.30	1.30	1.30
	50	TC	2.56	2.59	2.62	2.65	2.73	2.73	2.76	2.79	2.82	2.82	2.82	2.85	3.05	3.05	3.05	3.05
		S/T	0.89	1.00	1.00	1.00	0.67	0.81	0.95	1.00	0.56	0.70	0.85	0.98	0.32	0.46	0.59	0.97
		PI	1.39	1.39	1.39	1.39	1.40	1.40	1.40	1.40	1.40	1.40	1.40	1.40	1.41	1.41	1.41	1.41

TC:Total Cooling Capacity (kW)

S/T:Sensible Cooling Capacity Ratio

PI:Power Input(kW)

Note: The table shows the case where the operation frequency of a compressor is fixed.

18k																		
INDOOR AIRFLOW (CMH)	OUTDOOR DB(℃)	ID WB (℃)	16.0				18.0				19.0				22.0			
		ID DB (℃)	23.0	25.0	27.0	29.0	23.0	25.0	27.0	29.0	23.0	25.0	27.0	29.0	23.0	25.0	27.0	29.0
515	-15	TC	5.50	5.50	5.50	5.50	5.78	5.90	5.90	5.90	5.93	5.93	5.93	5.93	6.28	6.28	6.28	6.28
		S/T	0.66	0.72	0.79	0.85	0.55	0.61	0.67	0.72	0.49	0.55	0.61	0.67	0.38	0.42	0.48	0.54
		PI	1.02	1.02	1.02	1.02	1.01	1.01	1.01	1.01	1.01	1.01	1.01	1.01	1.02	1.02	1.02	1.02
	-10	TC	5.46	5.47	5.47	5.47	5.75	5.87	5.87	5.87	5.90	5.90	5.90	5.90	6.25	6.25	6.25	6.25
		S/T	0.66	0.73	0.80	0.85	0.55	0.61	0.67	0.73	0.49	0.55	0.61	0.67	0.38	0.43	0.49	0.54
		PI	1.01	1.02	1.02	1.01	1.01	1.01	1.01	1.01	1.01	1.01	1.01	1.01	1.02	1.02	1.02	1.02
	-5	TC	5.43	5.43	5.43	5.43	5.73	5.85	5.85	5.85	5.88	5.88	5.88	5.88	6.24	6.24	6.24	6.24
		S/T	0.66	0.73	0.80	0.86	0.56	0.61	0.67	0.73	0.50	0.56	0.61	0.67	0.38	0.43	0.49	0.55
		PI	1.01	1.01	1.01	1.01	1.01	1.01	1.01	1.01	1.01	1.01	1.01	1.01	1.02	1.02	1.02	1.02
	0	TC	5.40	5.41	5.41	5.41	5.71	5.83	5.83	5.83	5.87	5.87	5.87	5.87	6.23	6.23	6.23	6.23
		S/T	0.67	0.74	0.80	0.86	0.56	0.62	0.68	0.74	0.50	0.56	0.62	0.68	0.38	0.43	0.49	0.55
		PI	1.02	1.02	1.02	1.02	1.01	1.01	1.01	1.01	1.02	1.02	1.02	1.02	1.02	1.02	1.02	1.02
	5	TC	5.38	5.38	5.38	5.38	5.68	5.80	5.80	5.80	5.85	5.85	5.85	5.85	6.23	6.23	6.23	6.23
		S/T	0.67	0.74	0.81	0.87	0.56	0.62	0.68	0.74	0.50	0.56	0.62	0.68	0.38	0.43	0.49	0.55
		PI	1.03	1.03	1.03	1.03	1.02	1.02	1.02	1.02	1.02	1.02	1.02	1.02	1.03	1.03	1.03	1.03
	10	TC	5.34	5.35	5.35	5.35	5.66	5.78	5.78	5.78	5.82	5.82	5.82	5.82	6.21	6.21	6.21	6.21
		S/T	0.67	0.74	0.81	0.87	0.56	0.62	0.68	0.74	0.50	0.56	0.62	0.68	0.39	0.44	0.50	0.55
		PI	1.04	1.05	1.05	1.04	1.04	1.04	1.04	1.04	1.04	1.04	1.04	1.04	1.04	1.04	1.04	1.04
	15	TC	5.30	5.30	5.30	5.30	5.62	5.74	5.74	5.74	5.79	5.79	5.79	5.79	6.19	6.19	6.19	6.19
		S/T	0.68	0.75	0.82	0.88	0.57	0.63	0.69	0.75	0.51	0.57	0.63	0.69	0.39	0.44	0.50	0.56
		PI	1.07	1.07	1.07	1.07	1.06	1.06	1.06	1.06	1.06	1.06	1.06	1.06	1.07	1.07	1.07	1.07
	20	TC	5.24	5.24	5.24	5.24	5.56	5.56	5.56	5.56	5.73	5.73	5.73	5.73	6.13	6.13	6.13	6.13
		S/T	0.68	0.75	0.82	0.88	0.57	0.63	0.69	0.75	0.51	0.57	0.63	0.69	0.39	0.44	0.50	0.56
		PI	1.11	1.11	1.11	1.11	1.10	1.10	1.10	1.10	1.10	1.10	1.10	1.10	1.10	1.10	1.10	1.10
	25	TC	4.99	4.99	4.99	5.04	5.30	5.30	5.30	5.30	5.47	5.47	5.47	5.47	5.87	5.87	5.87	5.87
		S/T	0.69	0.76	0.83	0.89	0.57	0.63	0.70	0.76	0.51	0.58	0.64	0.70	0.38	0.44	0.50	0.56
		PI	1.22	1.22	1.22	1.22	1.22	1.22	1.22	1.22	1.22	1.22	1.22	1.22	1.22	1.22	1.22	1.22
	30	TC	4.76	4.76	4.76	4.81	5.07	5.07	5.07	5.07	5.22	5.22	5.22	5.22	5.62	5.62	5.62	5.62
		S/T	0.69	0.77	0.84	0.91	0.57	0.64	0.71	0.77	0.51	0.58	0.64	0.71	0.38	0.44	0.50	0.56
		PI	1.33	1.33	1.33	1.33	1.33	1.33	1.33	1.33	1.34	1.34	1.34	1.34	1.34	1.34	1.34	1.34
	35	TC	4.53	4.53	4.53	4.59	4.81	4.81	4.81	4.81	4.96	4.96	5.04	4.96	5.36	5.36	5.36	5.36
		S/T	0.70	0.78	0.85	0.92	0.57	0.64	0.71	0.79	0.51	0.58	0.65	0.72	0.37	0.44	0.50	0.57
		PI	1.46	1.46	1.46	1.46	1.46	1.46	1.46	1.46	1.47	1.47	1.47	1.47	1.48	1.48	1.48	1.48
	40	TC	4.28	4.28	4.29	4.34	4.55	4.55	4.55	4.55	4.70	4.70	4.74	4.70	5.07	5.07	5.07	5.07
		S/T	0.71	0.80	0.88	0.96	0.58	0.66	0.73	0.81	0.51	0.59	0.67	0.74	0.37	0.44	0.51	0.58
		PI	1.61	1.61	1.61	1.61	1.61	1.61	1.61	1.61	1.62	1.62	1.62	1.62	1.63	1.63	1.63	1.63
	46	TC	3.97	3.97	4.00	4.02	4.22	4.22	4.22	4.22	4.37	4.37	4.37	4.37	4.71	4.71	4.71	4.71
		S/T	0.72	0.81	0.89	0.98	0.58	0.66	0.74	0.83	0.51	0.59	0.67	0.75	0.36	0.44	0.51	0.58
		PI	1.79	1.79	1.79	1.79	1.80	1.80	1.80	1.80	1.80	1.80	1.80	1.80	1.82	1.82	1.82	1.82
	50	TC	3.71	3.71	3.74	3.77	3.97	3.97	3.97	3.97	4.11	4.11	4.11	4.11	4.45	4.45	4.45	4.45
		S/T	0.73	0.83	0.92	1.00	0.59	0.67	0.76	0.85	0.52	0.60	0.68	0.77	0.36	0.44	0.51	0.59
		PI	1.94	1.94	1.94	1.94	1.95	1.95	1.95	1.95	1.95	1.95	1.95	1.95	1.97	1.97	1.97	1.97
706	-15	TC	5.62	5.62	5.68	5.74	5.90	5.90	5.90	5.90	6.06	6.06	6.06	6.06	6.43	6.43	6.43	6.43
		S/T	0.70	0.78	0.98	1.00	0.56	0.64	0.72	0.80	0.49	0.58	0.66	0.73	0.35	0.42	0.49	0.57
		PI	1.04	1.04	1.04	1.04	1.04	1.04	1.04	1.04	1.03	1.03	1.03	1.03	1.04	1.04	1.04	1.04
	-10	TC	5.59	5.59	5.65	5.71	5.87	5.87	5.87	5.87	6.03	6.03	6.03	6.03	6.40	6.40	6.40	6.40
		S/T	0.70	0.79	0.99	1.00	0.56	0.64	0.73	0.81	0.49	0.58	0.66	0.74	0.35	0.43	0.49	0.57
		PI	1.03	1.03	1.03	1.03	1.04	1.04	1.04	1.04	1.03	1.03	1.03	1.03	1.04	1.04	1.04	1.04
	-5	TC	5.56	5.56	5.62	5.67	5.85	5.85	5.85	5.85	6.00	6.00	6.00	6.00	6.39	6.39	6.39	6.39
		S/T	0.70	0.79	0.99	1.00	0.57	0.64	0.73	0.81	0.50	0.59	0.66	0.74	0.35	0.43	0.50	0.58
		PI	1.03	1.03	1.03	1.03	1.04	1.04	1.04	1.04	1.03	1.03	1.03	1.03	1.04	1.04	1.04	1.04
	0	TC	5.53	5.53	5.59	5.65	5.83	5.83	5.83	5.83	5.99	5.99	5.99	5.99	6.38	6.38	6.38	6.38
		S/T	0.71	0.79	1.00	1.00	0.57	0.65	0.74	0.81	0.50	0.59	0.67	0.74	0.35	0.43	0.50	0.58
		PI	1.04	1.04	1.04	1.04	1.04	1.04	1.04	1.04	1.03	1.03	1.03	1.03	1.04	1.04	1.04	1.04
	5	TC	5.50	5.50	5.56	5.62	5.80	5.80	5.80	5.80	5.97	5.97	5.97	5.97	6.38	6.38	6.38	6.38
		S/T	0.71	0.80	1.00	1.00	0.57	0.65	0.74	0.82	0.50	0.59	0.67	0.75	0.35	0.43	0.50	0.58
		PI	1.05	1.05	1.05	1.05	1.05	1.05	1.05	1.05	1.04	1.04	1.04	1.04	1.05	1.05	1.05	1.05
	10	TC	5.47	5.47	5.53	5.58	5.78	5.78	5.78	5.78	5.94	5.94	5.94	5.94	6.36	6.36	6.36	6.36
		S/T	0.71	0.80	1.00	1.00	0.57	0.65	0.74	0.82	0.50	0.59	0.67	0.75	0.36	0.44	0.50	0.58
		PI	1.06	1.06	1.06	1.06	1.07	1.07	1.07	1.07	1.06	1.06	1.06	1.06	1.06	1.06	1.06	1.06
	15	TC	5.42	5.42	5.48	5.54	5.74	5.74	5.74	5.74	5.91	5.91	5.91	5.91	6.33	6.33	6.33	6.33
		S/T	0.72	0.81	0.90	0.98	0.58	0.66	0.75	0.83	0.51	0.60	0.68	0.76	0.36	0.44	0.51	0.59
		PI	1.09	1.09	1.09	1.09	1.09	1.09	1.09	1.09	1.08	1.08	1.08	1.08	1.09	1.09	1.09	1.09
	20	TC	5.36	5.36	5.42	5.48	5.68	5.68	5.68	5.68	5.85	5.85	5.85	5.85	6.28	6.28	6.28	6.28
		S/T	0.72	0.81	0.90	0.98	0.58	0.66	0.75	0.83	0.51	0.60	0.68	0.76	0.36	0.44	0.51	0.59
		PI	1.13	1.13	1.13	1.13	1.13	1.13	1.13	1.13	1.12	1.12	1.12	1.12	1.12	1.12	1.12	1.12
	25	TC	5.10	5.10	5.16	5.22	5.42	5.42	5.42	5.42	5.59	5.59	5.59	5.59	6.02	6.02	6.02	6.02
		S/T	0.73	0.83	0.91	1.00	0.59	0.67	0.76	0.85	0.52	0.60	0.69	0.77	0.36	0.44	0.51	0.59
		PI	1.25	1.25	1.25	1.25	1.25	1.25	1.25	1.25	1.25	1.25	1.25	1.25	1.25	1.25	1.25	1.25
	30	TC	4.87	4.87	4.93	4.99	5.19	5.19	5.19	5.19	5.33	5.33	5.33	5.33	5.76	5.76	5.76	5.76
		S/T	0.74	0.84	0.93	1.00	0.59	0.68	0.77	0.86	0.52	0.61	0.70	0.78	0.35	0.44	0.52	0.60
		PI	1.36	1.36	1.36	1.36	1.36	1.36	1.36	1.36	1.36	1.36	1.36	1.36	1.37	1.37	1.37	1.37
	35	TC	4.62	4.62	4.67	4.73	4.93	4.93	4.93	4.93	5.07	5.07	5.16	5.07	5.48	5.48	5.48	5.48
		S/T	0.76	0.86	0.96	1.00	0.60	0.69	0.79	0.88	0.52	0.61	0.70	0.80	0.35	0.44	0.52	0.61
		PI	1.49	1.49	1.49	1.49	1.49	1.49	1.49	1.49	1.50	1.50	1.50	1.50	1.50	1.50	1.50	1.50
	40	TC	4.29	4.30	4.34	4.39	4.57	4.57	4.57	4.60	4.71	4.71	4.76	4.71	5.09	5.09	5.09	5.09
		S/T	0.78	0.89	1.00	1.00	0.61	0.71	0.82	0.92	0.53	0.63	0.73	0.83	0.35	0.44	0.53	0.63
		PI	1.65	1.65	1.65	1.65	1.65	1.65	1.65	1.65	1.66	1.66	1.66	1.66	1.67	1.67	1.67	1.67
	46	TC	3.98	4.01	4.03	4.06	4.23	4.23	4.23	4.29	4.37	4.37	4.37	4.37	4.74	4.74	4.74	4.74
		S/T	0.79	0.91	1.00	1.00	0.61	0.72	0.83	0.94	0.53	0.64	0.74	0.85	0.34	0.44	0.54	0.64
		PI	1.83	1.83	1.83	1.83	1.84	1.84	1.84	1.84	1.85	1.85	1.85	1.85	1.86	1.86	1.86	1.86
	50	TC	3.72	3.75	3.78	3.81	3.98	3.98	3.98	4.01	4.12	4.12	4.12	4.12	4.46	4.46	4.46	4.46
		S/T	0.81	0.93	1.00	1.00	0.62	0.74	0.86	0.97	0.54	0.65	0.76	0.88	0.34	0.44	0.55	0.91
		PI	1.99	1.99	1.99	1.99	2.00	2.00	2.00	2.00	2.00	2.00	2.00	2.00	2.02	2.02	2.02	2.02

911	-15	TC	5.74	5.80	5.86	5.92	6.05	6.05	6.05	6.11	6.20	6.20	6.20	6.20	6.57	6.57	6.57	6.57
		S/T	0.75	0.85	1.00	1.00	0.59	0.69	0.79	0.98	0.51	0.61	0.70	0.80	0.33	0.42	0.51	0.61
		PI	1.06	1.06	1.06	1.06	1.06	1.06	1.06	1.06	1.06	1.06	1.06	1.06	1.05	1.05	1.05	1.05
	-10	TC	5.71	5.77	5.83	5.89	6.02	6.02	6.02	6.08	6.17	6.17	6.17	6.17	6.55	6.55	6.55	6.55
		S/T	0.76	0.85	1.00	1.00	0.59	0.69	0.80	0.98	0.51	0.61	0.71	0.81	0.33	0.43	0.51	0.61
		PI	1.05	1.05	1.05	1.05	1.06	1.06	1.06	1.06	1.06	1.06	1.06	1.06	1.05	1.05	1.05	1.05
	-5	TC	5.67	5.73	5.79	5.85	6.00	6.00	6.00	6.06	6.15	6.15	6.15	6.15	6.53	6.53	6.53	6.53
		S/T	0.76	0.86	1.00	1.00	0.59	0.69	0.80	0.99	0.52	0.61	0.71	0.81	0.33	0.43	0.52	0.61
		PI	1.05	1.05	1.05	1.05	1.05	1.05	1.05	1.05	1.06	1.06	1.06	1.06	1.06	1.06	1.06	1.06
	0	TC	5.65	5.71	5.76	5.82	5.97	5.97	5.97	6.03	6.13	6.13	6.13	6.13	6.53	6.53	6.53	6.53
		S/T	0.76	0.86	1.00	1.00	0.60	0.70	0.80	0.99	0.52	0.62	0.72	0.81	0.33	0.43	0.52	0.62
		PI	1.05	1.05	1.05	1.05	1.06	1.06	1.06	1.06	1.06	1.06	1.06	1.06	1.06	1.06	1.06	1.06
	5	TC	5.62	5.68	5.74	5.79	5.95	5.95	5.95	6.01	6.11	6.11	6.11	6.11	6.52	6.52	6.52	6.52
		S/T	0.77	0.87	1.00	1.00	0.60	0.70	0.81	1.00	0.52	0.62	0.72	0.82	0.33	0.43	0.52	0.62
		PI	1.06	1.06	1.06	1.06	1.07	1.07	1.07	1.07	1.07	1.07	1.07	1.07	1.07	1.07	1.07	1.07
	10	TC	5.58	5.64	5.70	5.76	5.92	5.92	5.92	5.98	6.09	6.09	6.09	6.09	6.51	6.51	6.51	6.51
		S/T	0.77	0.87	1.00	1.00	0.60	0.70	0.81	1.00	0.52	0.62	0.72	0.82	0.34	0.44	0.52	0.62
		PI	1.08	1.08	1.08	1.08	1.08	1.08	1.08	1.08	1.09	1.09	1.09	1.09	1.08	1.08	1.08	1.08
	15	TC	5.54	5.60	5.65	5.71	5.88	5.88	5.88	5.94	6.05	6.05	6.05	6.05	6.48	6.48	6.48	6.48
		S/T	0.78	0.88	0.99	1.00	0.61	0.71	0.82	0.92	0.53	0.63	0.73	0.83	0.34	0.44	0.53	0.63
		PI	1.11	1.11	1.11	1.11	1.11	1.11	1.11	1.11	1.11	1.11	1.11	1.11	1.10	1.10	1.10	1.10
	20	TC	5.48	5.53	5.59	5.65	5.82	5.82	5.82	5.88	5.99	5.99	5.99	5.99	6.42	6.42	6.42	6.42
		S/T	0.78	0.88	0.99	1.00	0.61	0.71	0.82	0.92	0.53	0.63	0.73	0.83	0.34	0.44	0.53	0.63
		PI	1.15	1.15	1.15	1.15	1.15	1.15	1.15	1.15	1.15	1.15	1.15	1.15	1.14	1.14	1.14	1.14
	25	TC	5.22	5.28	5.33	5.39	5.56	5.56	5.56	5.62	5.73	5.73	5.73	5.73	6.16	6.16	6.16	6.16
		S/T	0.79	0.90	1.00	1.00	0.61	0.72	0.83	0.94	0.53	0.64	0.74	0.85	0.34	0.44	0.54	0.64
		PI	1.27	1.27	1.27	1.27	1.27	1.27	1.27	1.27	1.27	1.27	1.27	1.27	1.27	1.27	1.27	1.27
	30	TC	4.99	5.05	5.10	5.16	5.30	5.30	5.30	5.36	5.45	5.45	5.45	5.45	5.88	5.88	5.88	5.88
		S/T	0.81	0.92	1.00	1.00	0.62	0.74	0.85	0.96	0.54	0.65	0.76	0.87	0.34	0.44	0.55	0.65
		PI	1.39	1.39	1.39	1.39	1.39	1.39	1.39	1.39	1.39	1.39	1.39	1.39	1.40	1.40	1.40	1.40
	35	TC	4.73	4.79	4.85	4.90	5.05	5.05	5.05	5.10	5.19	5.19	**5.28**	5.33	5.59	5.59	5.59	5.59
		S/T	0.82	0.95	1.00	1.00	0.63	0.75	0.87	0.99	0.54	0.66	**0.77**	0.88	0.34	0.44	0.55	0.66
		PI	1.52	1.52	1.52	1.52	1.52	1.52	1.52	1.52	1.53	1.53	**1.53**	1.53	1.54	1.54	1.54	1.54
	40	TC	4.39	4.43	4.47	4.52	4.68	4.68	4.71	4.77	4.82	4.82	4.87	4.93	5.21	5.21	5.21	5.21
		S/T	0.86	0.99	1.00	1.00	0.65	0.78	0.91	1.00	0.55	0.68	0.81	0.93	0.33	0.45	0.57	0.90
		PI	1.68	1.68	1.68	1.68	1.69	1.69	1.69	1.69	1.69	1.69	1.69	1.69	1.71	1.71	1.71	1.71
	46	TC	4.06	4.09	4.12	4.15	4.35	4.35	4.40	4.46	4.49	4.49	4.49	4.54	4.85	4.85	4.85	4.85
		S/T	0.87	1.00	1.00	1.00	0.65	0.79	0.93	1.00	0.56	0.69	0.82	0.95	0.33	0.45	0.58	0.92
		PI	1.87	1.87	1.87	1.87	1.88	1.88	1.88	1.88	1.88	1.88	1.88	1.88	1.90	1.90	1.90	1.90
	50	TC	3.81	3.84	3.87	3.89	4.06	4.06	4.09	4.12	4.20	4.20	4.20	4.23	4.57	4.57	4.57	4.57
		S/T	0.90	1.00	1.00	1.00	0.67	0.82	0.96	1.00	0.56	0.71	0.85	0.99	0.32	0.46	0.59	0.97
		PI	2.03	2.03	2.03	2.03	2.04	2.04	2.04	2.04	2.04	2.04	2.04	2.04	2.06	2.06	2.06	2.06

TC:Total Cooling Capacity (kW)

S/T:Sensible Cooling Capacity Ratio

PI:Power Input(kW)

Note: The table shows the case where the operation frequency of a compressor is fixed.

24k																		
INDOOR AIRFLOW (CMH)	OUTDOOR DB(℃)	ID WB (℃)	16.0				18.0				19.0				22.0			
		ID DB (℃)	23.0	25.0	27.0	29.0	23.0	25.0	27.0	29.0	23.0	25.0	27.0	29.0	23.0	25.0	27.0	29.0

825	-15	TC	7.35	7.34	7.34	7.40	7.73	7.88	7.88	7.88	7.93	7.93	7.93	7.93	8.40	8.40	8.40	8.40
		S/T	0.69	0.75	0.83	0.91	0.55	0.63	0.70	0.77	0.49	0.56	0.64	0.70	0.36	0.42	0.48	0.55
		PI	1.46	1.47	1.47	1.46	1.46	1.46	1.46	1.46	1.46	1.46	1.46	1.46	1.45	1.45	1.45	1.45
	-10	TC	7.31	7.30	7.30	7.36	7.69	7.84	7.84	7.84	7.89	7.89	7.89	7.89	8.37	8.37	8.37	8.37
		S/T	0.69	0.76	0.83	0.91	0.55	0.63	0.70	0.78	0.49	0.56	0.64	0.71	0.36	0.43	0.49	0.55
		PI	1.46	1.46	1.46	1.46	1.45	1.45	1.45	1.45	1.46	1.46	1.46	1.46	1.46	1.46	1.46	1.46
	-5	TC	7.26	7.26	7.26	7.32	7.66	7.81	7.81	7.81	7.86	7.86	7.86	7.86	8.35	8.35	8.35	8.35
		S/T	0.69	0.76	0.84	0.92	0.56	0.63	0.70	0.78	0.50	0.57	0.64	0.71	0.36	0.43	0.49	0.56
		PI	1.45	1.46	1.46	1.45	1.45	1.45	1.45	1.45	1.46	1.46	1.46	1.46	1.46	1.46	1.46	1.46
	0	TC	7.23	7.22	7.22	7.28	7.63	7.78	7.78	7.78	7.84	7.84	7.84	7.84	8.34	8.34	8.34	8.34
		S/T	0.70	0.76	0.84	0.92	0.56	0.64	0.71	0.78	0.50	0.57	0.65	0.72	0.36	0.43	0.49	0.56
		PI	1.46	1.46	1.46	1.46	1.46	1.46	1.46	1.46	1.46	1.46	1.46	1.46	1.46	1.46	1.46	1.46
	5	TC	7.19	7.18	7.18	7.24	7.60	7.75	7.75	7.75	7.82	7.82	7.82	7.82	8.34	8.34	8.34	8.34
		S/T	0.70	0.77	0.85	0.93	0.56	0.64	0.71	0.79	0.50	0.57	0.65	0.72	0.36	0.43	0.49	0.56
		PI	1.47	1.48	1.48	1.47	1.47	1.47	1.47	1.47	1.47	1.47	1.47	1.47	1.47	1.47	1.47	1.47
	10	TC	7.15	7.14	7.14	7.20	7.56	7.71	7.71	7.71	7.79	7.79	7.79	7.79	8.31	8.31	8.31	8.31
		S/T	0.70	0.77	0.85	0.93	0.56	0.64	0.71	0.79	0.50	0.57	0.65	0.72	0.37	0.44	0.50	0.56
		PI	1.50	1.50	1.50	1.50	1.49	1.49	1.49	1.49	1.50	1.50	1.50	1.50	1.49	1.49	1.49	1.49
	15	TC	7.09	7.08	7.08	7.14	7.51	7.66	7.66	7.66	7.74	7.74	7.74	7.74	8.28	8.28	8.28	8.28
		S/T	0.71	0.78	0.86	0.94	0.57	0.64	0.72	0.80	0.51	0.58	0.66	0.73	0.37	0.44	0.50	0.57
		PI	1.53	1.54	1.54	1.53	1.53	1.53	1.53	1.53	1.53	1.53	1.53	1.53	1.52	1.52	1.52	1.52
	20	TC	7.01	7.00	7.00	7.06	7.43	7.43	7.43	7.43	7.66	7.66	7.66	7.66	8.21	8.21	8.21	8.21
		S/T	0.71	0.78	0.86	0.94	0.57	0.65	0.72	0.80	0.51	0.58	0.66	0.73	0.37	0.44	0.50	0.57
		PI	1.59	1.59	1.59	1.59	1.58	1.58	1.58	1.58	1.58	1.58	1.58	1.58	1.57	1.57	1.57	1.57
	25	TC	6.69	6.69	6.69	6.74	7.09	7.09	7.09	7.09	7.32	7.32	7.32	7.32	7.86	7.86	7.86	7.86
		S/T	0.71	0.79	0.88	0.96	0.58	0.65	0.73	0.81	0.51	0.59	0.66	0.74	0.37	0.44	0.51	0.58
		PI	1.75	1.75	1.75	1.75	1.75	1.75	1.75	1.75	1.75	1.75	1.75	1.75	1.75	1.75	1.75	1.75
	30	TC	6.37	6.37	6.43	6.49	6.77	6.77	6.77	6.77	6.97	6.97	6.97	6.97	7.52	7.52	7.52	7.52
		S/T	0.72	0.81	0.89	0.97	0.58	0.66	0.74	0.82	0.51	0.59	0.67	0.75	0.36	0.44	0.51	0.58
		PI	1.91	1.91	1.91	1.91	1.92	1.92	1.92	1.92	1.92	1.92	1.92	1.92	1.93	1.93	1.93	1.93
	35	TC	6.06	6.06	6.11	6.17	6.43	6.43	6.43	6.43	6.63	6.63	6.74	6.63	7.17	7.17	7.17	7.17
		S/T	0.73	0.82	0.91	1.00	0.58	0.67	0.76	0.84	0.52	0.60	0.68	0.77	0.36	0.44	0.51	0.59
		PI	2.09	2.09	2.09	2.09	2.10	2.10	2.10	2.10	2.11	2.11	2.11	2.11	2.12	2.12	2.12	2.12
	40	TC	5.66	5.66	5.71	5.77	6.01	6.01	6.01	6.04	6.21	6.21	6.28	6.21	6.72	6.72	6.72	6.72
		S/T	0.75	0.85	0.95	1.00	0.59	0.69	0.78	0.88	0.52	0.61	0.70	0.79	0.35	0.44	0.52	0.61
		PI	2.31	2.31	2.31	2.31	2.32	2.32	2.32	2.32	2.33	2.33	2.33	2.33	2.34	2.34	2.34	2.34
	46	TC	5.24	5.24	5.29	5.35	5.58	5.58	5.58	5.64	5.78	5.78	5.78	5.78	6.23	6.23	6.23	6.23
		S/T	0.76	0.87	0.97	1.00	0.60	0.70	0.79	0.89	0.52	0.62	0.71	0.81	0.35	0.44	0.53	0.61
		PI	2.57	2.57	2.57	2.57	2.58	2.58	2.58	2.58	2.59	2.59	2.59	2.59	2.61	2.61	2.61	2.61
	50	TC	4.90	4.95	5.01	5.07	5.24	5.24	5.24	5.29	5.44	5.44	5.44	5.44	5.89	5.89	5.89	5.89
		S/T	0.78	0.89	0.99	1.00	0.61	0.71	0.82	0.92	0.53	0.63	0.73	0.83	0.35	0.44	0.53	0.62
		PI	2.79	2.79	2.79	2.79	2.80	2.80	2.80	2.80	2.81	2.81	2.81	2.81	2.83	2.83	2.83	2.83
1035	-15	TC	7.50	7.50	7.56	7.65	7.88	7.88	7.88	7.88	8.09	8.09	8.09	8.09	8.58	8.58	8.58	8.58
		S/T	0.71	0.81	0.98	1.00	0.57	0.66	0.74	0.83	0.50	0.59	0.68	0.76	0.34	0.42	0.50	0.58
		PI	1.49	1.49	1.49	1.49	1.49	1.49	1.49	1.49	1.49	1.49	1.49	1.49	1.48	1.48	1.48	1.48
	-10	TC	7.45	7.45	7.51	7.60	7.84	7.84	7.84	7.84	8.05	8.05	8.05	8.05	8.55	8.55	8.55	8.55
		S/T	0.72	0.82	0.99	1.00	0.57	0.66	0.75	0.83	0.50	0.59	0.68	0.77	0.34	0.43	0.50	0.58
		PI	1.49	1.49	1.49	1.49	1.48	1.48	1.48	1.48	1.48	1.48	1.48	1.48	1.48	1.48	1.48	1.48
	-5	TC	7.41	7.41	7.47	7.56	7.81	7.81	7.81	7.81	8.02	8.02	8.02	8.02	8.53	8.53	8.53	8.53
		S/T	0.72	0.82	0.99	1.00	0.58	0.66	0.75	0.84	0.51	0.59	0.68	0.77	0.34	0.43	0.51	0.59
		PI	1.48	1.48	1.48	1.48	1.48	1.48	1.48	1.48	1.48	1.48	1.48	1.48	1.49	1.49	1.49	1.49
	0	TC	7.37	7.37	7.43	7.52	7.78	7.78	7.78	7.78	7.99	7.99	7.99	7.99	8.52	8.52	8.52	8.52
		S/T	0.73	0.82	1.00	1.00	0.58	0.67	0.75	0.84	0.51	0.60	0.69	0.77	0.34	0.43	0.51	0.59
		PI	1.49	1.49	1.49	1.49	1.49	1.49	1.49	1.49	1.49	1.49	1.49	1.49	1.49	1.49	1.49	1.49
	5	TC	7.33	7.33	7.39	7.48	7.75	7.75	7.75	7.75	7.97	7.97	7.97	7.97	8.51	8.51	8.51	8.51
		S/T	0.73	0.83	1.00	1.00	0.58	0.67	0.76	0.85	0.51	0.60	0.69	0.78	0.34	0.43	0.51	0.59
		PI	1.50	1.50	1.50	1.50	1.50	1.50	1.50	1.50	1.50	1.50	1.50	1.50	1.50	1.50	1.50	1.50
	10	TC	7.29	7.29	7.35	7.44	7.71	7.71	7.71	7.71	7.93	7.93	7.93	7.93	8.49	8.49	8.49	8.49
		S/T	0.73	0.83	1.00	1.00	0.58	0.67	0.76	0.85	0.51	0.60	0.69	0.78	0.35	0.44	0.51	0.59
		PI	1.53	1.53	1.53	1.53	1.52	1.52	1.52	1.52	1.52	1.52	1.52	1.52	1.52	1.52	1.52	1.52
	15	TC	7.23	7.23	7.29	7.38	7.66	7.66	7.66	7.66	7.89	7.89	7.89	7.89	8.46	8.46	8.46	8.46
		S/T	0.74	0.84	0.93	1.00	0.59	0.68	0.77	0.86	0.52	0.61	0.70	0.79	0.35	0.44	0.52	0.60
		PI	1.57	1.57	1.57	1.57	1.56	1.56	1.56	1.56	1.56	1.56	1.56	1.56	1.55	1.55	1.55	1.55
	20	TC	7.15	7.15	7.21	7.29	7.58	7.58	7.58	7.58	7.81	7.81	7.81	7.81	8.38	8.38	8.38	8.38
		S/T	0.74	0.84	0.93	1.00	0.59	0.68	0.77	0.86	0.52	0.61	0.70	0.79	0.35	0.44	0.52	0.60
		PI	1.62	1.62	1.62	1.62	1.61	1.61	1.61	1.61	1.61	1.61	1.61	1.61	1.60	1.60	1.60	1.60
	25	TC	6.83	6.83	6.89	6.95	7.26	7.26	7.26	7.26	7.46	7.46	7.46	7.46	8.04	8.04	8.04	8.04
		S/T	0.75	0.86	0.95	1.00	0.59	0.69	0.79	0.88	0.52	0.61	0.71	0.80	0.35	0.44	0.52	0.61
		PI	1.79	1.79	1.79	1.79	1.78	1.78	1.78	1.78	1.78	1.78	1.78	1.78	1.79	1.79	1.79	1.79
	30	TC	6.52	6.52	6.57	6.63	6.92	6.92	6.92	6.98	7.12	7.12	7.12	7.12	7.69	7.69	7.69	7.69
		S/T	0.77	0.87	0.97	1.00	0.60	0.70	0.80	0.90	0.52	0.62	0.72	0.82	0.35	0.44	0.53	0.62
		PI	1.95	1.95	1.95	1.95	1.95	1.95	1.95	1.95	1.96	1.96	1.96	1.96	1.96	1.96	1.96	1.96
	35	TC	6.17	6.23	6.29	6.34	6.57	6.57	6.57	6.63	6.78	6.78	6.89	6.78	7.32	7.32	7.32	7.32
		S/T	0.78	0.89	1.00	1.00	0.61	0.71	0.82	0.92	0.53	0.63	0.73	0.84	0.34	0.44	0.53	0.63
		PI	2.13	2.13	2.13	2.13	2.14	2.14	2.14	2.14	2.15	2.15	2.15	2.15	2.15	2.15	2.15	2.15
	40	TC	5.83	5.89	5.95	6.00	6.21	6.21	6.21	6.26	6.41	6.41	6.47	6.43	6.93	6.93	6.93	6.93
		S/T	0.81	0.93	1.00	1.00	0.62	0.74	0.85	0.96	0.54	0.65	0.76	0.87	0.34	0.44	0.55	0.65
		PI	2.35	2.35	2.35	2.35	2.36	2.36	2.36	2.36	2.37	2.37	2.37	2.37	2.38	2.38	2.38	2.38
	46	TC	5.41	5.46	5.52	5.58	5.75	5.75	5.75	5.81	5.95	5.95	5.95	6.01	6.44	6.44	6.44	6.44
		S/T	0.82	0.95	1.00	1.00	0.63	0.75	0.87	0.99	0.54	0.66	0.77	0.89	0.34	0.44	0.55	0.66
		PI	2.62	2.62	2.62	2.62	2.63	2.63	2.63	2.63	2.64	2.64	2.64	2.64	2.66	2.66	2.66	2.66
	50	TC	5.06	5.12	5.18	5.23	5.41	5.41	5.46	5.52	5.61	5.61	5.61	5.67	6.07	6.07	6.07	6.07
		S/T	0.84	0.98	1.00	1.00	0.64	0.77	0.89	1.00	0.55	0.67	0.79	0.91	0.33	0.45	0.56	0.91
		PI	2.84	2.84	2.84	2.84	2.85	2.85	2.85	2.85	2.86	2.86	2.86	2.86	2.88	2.88	2.88	2.88

1229	-15	TC	7.68	7.77	7.86	7.95	8.06	8.06	8.06	8.15	8.26	8.26	8.26	8.26	8.79	8.79	8.79	8.79
		S/T	0.75	0.86	1.00	1.00	0.59	0.69	0.79	0.98	0.51	0.61	0.70	0.81	0.33	0.42	0.52	0.61
		PI	1.52	1.52	1.52	1.52	1.51	1.51	1.51	1.51	1.51	1.51	1.51	1.51	1.51	1.51	1.51	1.51
	-10	TC	7.63	7.72	7.81	7.90	8.02	8.02	8.02	8.10	8.22	8.22	8.22	8.22	8.76	8.76	8.76	8.76
		S/T	0.76	0.86	1.00	1.00	0.59	0.69	0.80	0.98	0.51	0.61	0.71	0.82	0.33	0.43	0.52	0.61
		PI	1.51	1.51	1.51	1.51	1.51	1.51	1.51	1.51	1.51	1.51	1.51	1.51	1.51	1.51	1.51	1.51
	-5	TC	7.59	7.68	7.77	7.85	7.99	7.99	7.99	8.07	8.19	8.19	8.19	8.19	8.73	8.73	8.73	8.73
		S/T	0.76	0.87	1.00	1.00	0.59	0.69	0.80	0.99	0.52	0.61	0.71	0.82	0.33	0.43	0.53	0.61
		PI	1.51	1.51	1.51	1.51	1.51	1.51	1.51	1.51	1.51	1.51	1.51	1.51	1.51	1.51	1.51	1.51
	0	TC	7.55	7.64	7.73	7.82	7.96	7.96	7.96	8.04	8.17	8.17	8.17	8.17	8.73	8.73	8.73	8.73
		S/T	0.76	0.87	1.00	1.00	0.60	0.70	0.80	0.99	0.52	0.62	0.72	0.82	0.33	0.43	0.53	0.62
		PI	1.52	1.52	1.52	1.52	1.51	1.51	1.51	1.51	1.52	1.52	1.52	1.52	1.52	1.52	1.52	1.52
	5	TC	7.51	7.60	7.69	7.78	7.93	7.93	7.93	8.01	8.14	8.14	8.14	8.14	8.72	8.72	8.72	8.72
		S/T	0.77	0.88	1.00	1.00	0.60	0.70	0.81	1.00	0.52	0.62	0.72	0.83	0.33	0.43	0.53	0.62
		PI	1.53	1.53	1.53	1.53	1.53	1.53	1.53	1.53	1.53	1.53	1.53	1.53	1.53	1.53	1.53	1.53
	10	TC	7.47	7.55	7.64	7.73	7.89	7.89	7.89	7.98	8.11	8.11	8.11	8.11	8.70	8.70	8.70	8.70
		S/T	0.77	0.88	1.00	1.00	0.60	0.70	0.81	1.00	0.52	0.62	0.72	0.83	0.34	0.44	0.53	0.62
		PI	1.56	1.56	1.56	1.56	1.55	1.55	1.55	1.55	1.55	1.55	1.55	1.55	1.55	1.55	1.55	1.55
	15	TC	7.40	7.49	7.58	7.67	7.83	7.83	7.83	7.92	8.06	8.06	8.06	8.06	8.66	8.66	8.66	8.66
		S/T	0.78	0.89	0.99	1.00	0.61	0.71	0.82	0.92	0.53	0.63	0.73	0.84	0.34	0.44	0.54	0.63
		PI	1.59	1.59	1.59	1.59	1.59	1.59	1.59	1.59	1.59	1.59	1.59	1.59	1.58	1.58	1.58	1.58
	20	TC	7.32	7.41	7.49	7.58	7.75	7.75	7.75	7.84	7.98	7.98	7.98	7.98	8.58	8.58	8.58	8.58
		S/T	0.78	0.89	0.99	1.00	0.61	0.71	0.82	0.92	0.53	0.63	0.73	0.84	0.34	0.44	0.54	0.63
		PI	1.65	1.65	1.65	1.65	1.64	1.64	1.64	1.64	1.64	1.64	1.64	1.64	1.63	1.63	1.63	1.63
	25	TC	6.98	7.03	7.09	7.15	7.41	7.41	7.41	7.49	7.64	7.64	7.64	7.64	8.21	8.21	8.21	8.21
		S/T	0.79	0.91	1.00	1.00	0.62	0.73	0.84	0.94	0.53	0.64	0.75	0.86	0.34	0.44	0.54	0.64
		PI	1.82	1.82	1.82	1.82	1.82	1.82	1.82	1.82	1.82	1.82	1.82	1.82	1.82	1.82	1.82	1.82
	30	TC	6.63	6.69	6.75	6.80	7.06	7.06	7.06	7.12	7.29	7.29	7.29	7.29	7.84	7.84	7.84	7.84
		S/T	0.81	0.93	1.00	1.00	0.62	0.74	0.86	0.97	0.54	0.65	0.76	0.88	0.34	0.44	0.55	0.65
		PI	1.98	1.98	1.98	1.98	1.99	1.99	1.99	1.99	1.99	1.99	1.99	1.99	2.00	2.00	2.00	2.00
	35	TC	6.32	6.37	6.43	6.49	6.72	6.72	6.72	6.78	6.92	6.92	**7.03**	7.09	7.46	7.46	7.46	7.46
		S/T	0.83	0.95	1.00	1.00	0.63	0.75	0.88	1.00	0.54	0.66	**0.77**	0.89	0.34	0.45	0.56	0.67
		PI	2.17	2.17	2.17	2.17	2.18	2.18	2.18	2.18	2.19	2.19	**2.19**	2.19	2.20	2.20	2.20	2.20
	40	TC	5.96	6.02	6.08	6.13	6.35	6.35	6.38	6.43	6.54	6.54	6.60	6.66	7.07	7.07	7.07	7.07
		S/T	0.86	1.00	1.00	1.00	0.65	0.78	0.92	1.00	0.55	0.68	0.81	0.94	0.33	0.45	0.57	0.90
		PI	2.40	2.40	2.40	2.40	2.41	2.41	2.41	2.41	2.42	2.42	2.42	2.42	2.43	2.43	2.43	2.43
	46	TC	5.52	5.58	5.64	5.69	5.90	5.90	5.95	6.01	6.07	6.07	6.07	6.13	6.59	6.59	6.59	6.59
		S/T	0.88	1.00	1.00	1.00	0.66	0.80	0.93	1.00	0.56	0.69	0.83	0.96	0.33	0.45	0.58	0.92
		PI	2.67	2.67	2.67	2.67	2.68	2.68	2.68	2.68	2.69	2.69	2.69	2.69	2.71	2.71	2.71	2.71
	50	TC	5.18	5.23	5.29	5.35	5.52	5.52	5.58	5.64	5.72	5.72	5.72	5.78	6.18	6.18	6.18	6.18
		S/T	0.90	1.00	1.00	1.00	0.67	0.82	0.97	1.00	0.57	0.71	0.85	0.99	0.32	0.46	0.59	0.97
		PI	2.89	2.89	2.89	2.89	2.91	2.91	2.91	2.91	2.91	2.91	2.91	2.91	2.94	2.94	2.94	2.94

TC:Total Cooling Capacity (kW)

S/T:Sensible Cooling Capacity Ratio

PI:Power Input(kW)

Note: The table shows the case where the operation frequency of a compressor is fixed.

30k																		
INDOOR AIRFLOW (CMH)	OUTDOOR DB(℃)	ID WB (℃)	16.0				18.0				19.0				22.0			
		ID DB (℃)	23.0	25.0	27.0	29.0	23.0	25.0	27.0	29.0	23.0	25.0	27.0	29.0	23.0	25.0	27.0	29.0
1500	-15	TC	9.20	9.31	9.40	9.49	9.68	9.89	9.98	10.07	9.90	9.90	9.90	9.90	10.52	10.52	10.52	10.52
		S/T	0.76	0.87	0.97	0.97	0.59	0.69	0.80	0.90	0.51	0.61	0.71	0.82	0.33	0.42	0.52	0.62
		PI	1.67	1.66	1.66	1.67	1.66	1.66	1.66	1.66	1.66	1.66	1.66	1.66	1.65	1.65	1.65	1.65
	-10	TC	9.15	9.25	9.34	9.43	9.62	9.83	9.92	10.01	9.85	9.85	9.85	9.85	10.49	10.49	10.49	10.49
		S/T	0.77	0.87	0.97	0.97	0.59	0.70	0.81	0.90	0.51	0.61	0.72	0.82	0.33	0.43	0.52	0.62
		PI	1.66	1.65	1.65	1.66	1.66	1.66	1.66	1.66	1.65	1.65	1.65	1.65	1.65	1.65	1.65	1.65
	-5	TC	9.09	9.20	9.29	9.38	9.59	9.80	9.89	9.98	9.82	9.82	9.82	9.82	10.46	10.46	10.46	10.46
		S/T	0.77	0.88	0.98	0.98	0.59	0.70	0.81	0.91	0.52	0.61	0.72	0.83	0.33	0.43	0.53	0.62
		PI	1.65	1.65	1.65	1.65	1.66	1.66	1.66	1.66	1.65	1.65	1.65	1.65	1.66	1.66	1.66	1.66
	0	TC	9.05	9.15	9.24	9.33	9.55	9.76	9.85	9.94	9.79	9.79	9.79	9.79	10.45	10.45	10.45	10.45
		S/T	0.77	0.88	0.98	0.98	0.60	0.70	0.81	0.91	0.52	0.62	0.73	0.83	0.33	0.43	0.53	0.63
		PI	1.66	1.66	1.66	1.66	1.66	1.66	1.66	1.66	1.66	1.66	1.66	1.66	1.66	1.66	1.66	1.66
	5	TC	9.00	9.11	9.19	9.28	9.51	9.72	9.81	9.90	9.76	9.76	9.76	9.76	10.44	10.44	10.44	10.44
		S/T	0.78	0.89	0.99	0.99	0.60	0.71	0.82	0.92	0.52	0.62	0.73	0.84	0.33	0.43	0.53	0.63
		PI	1.68	1.67	1.67	1.68	1.68	1.68	1.68	1.68	1.67	1.67	1.67	1.67	1.67	1.67	1.67	1.67
	10	TC	8.95	9.05	9.14	9.23	9.47	9.68	9.77	9.85	9.72	9.72	9.72	9.72	10.42	10.42	10.42	10.42
		S/T	0.78	0.89	0.99	0.99	0.60	0.71	0.82	0.92	0.52	0.62	0.73	0.84	0.34	0.44	0.53	0.63
		PI	1.70	1.70	1.70	1.70	1.70	1.70	1.70	1.70	1.70	1.70	1.70	1.70	1.70	1.70	1.70	1.70
	15	TC	8.87	8.98	9.06	9.15	9.41	9.61	9.70	9.79	9.66	9.66	9.66	9.66	10.37	10.37	10.37	10.37
		S/T	0.79	0.90	1.00	1.00	0.61	0.72	0.83	0.93	0.53	0.63	0.74	0.85	0.34	0.44	0.54	0.64
		PI	1.75	1.74	1.74	1.75	1.74	1.74	1.74	1.74	1.74	1.74	1.74	1.74	1.73	1.73	1.73	1.73
	20	TC	8.77	8.88	8.96	9.05	9.31	9.31	9.31	9.39	9.56	9.56	9.56	9.56	10.28	10.28	10.28	10.28
		S/T	0.79	0.90	1.00	1.00	0.61	0.72	0.83	0.93	0.53	0.63	0.74	0.85	0.34	0.44	0.54	0.64
		PI	1.81	1.80	1.80	1.81	1.80	1.80	1.80	1.80	1.79	1.79	1.79	1.79	1.78	1.78	1.78	1.78
	25	TC	8.36	8.44	8.53	8.62	8.90	8.90	8.90	8.99	9.16	9.16	9.16	9.16	9.85	9.85	9.85	9.85
		S/T	0.80	0.92	1.00	1.00	0.62	0.73	0.84	0.95	0.53	0.64	0.75	0.86	0.34	0.44	0.54	0.65
		PI	1.99	1.99	1.99	1.99	1.99	1.99	1.99	1.99	1.99	1.99	1.99	1.99	1.99	1.99	1.99	1.99
	30	TC	7.98	8.07	8.16	8.24	8.47	8.47	8.47	8.56	8.73	8.73	8.73	8.73	9.42	9.42	9.42	9.42
		S/T	0.81	0.94	1.00	1.00	0.63	0.74	0.86	0.98	0.54	0.65	0.77	0.88	0.34	0.44	0.55	0.66
		PI	2.18	2.18	2.18	2.18	2.19	2.19	2.19	2.19	2.19	2.19	2.19	2.19	2.20	2.20	2.20	2.20
	35	TC	7.58	7.67	7.75	7.84	8.07	8.07	8.07	8.16	8.33	8.33	8.44	8.53	8.96	8.96	8.96	8.96
		S/T	0.83	0.96	1.00	1.00	0.63	0.76	0.88	1.00	0.54	0.66	0.78	0.89	0.33	0.45	0.56	0.67
		PI	2.38	2.38	2.38	2.38	2.39	2.39	2.39	2.39	2.40	2.40	2.40	2.40	2.41	2.41	2.41	2.41
	40	TC	7.04	7.11	7.18	7.25	7.51	7.51	7.53	7.60	7.73	7.73	7.80	7.88	8.34	8.34	8.34	8.34
		S/T	0.87	1.00	1.00	1.00	0.65	0.79	0.92	1.00	0.55	0.69	0.82	0.95	0.33	0.45	0.57	0.70
		PI	2.63	2.63	2.63	2.63	2.64	2.64	2.64	2.64	2.65	2.65	2.65	2.65	2.67	2.67	2.67	2.67
	46	TC	6.51	6.57	6.63	6.68	6.96	6.96	7.02	7.08	7.16	7.16	7.16	7.25	7.76	7.76	7.76	7.76
		S/T	0.88	1.00	1.00	1.00	0.66	0.80	0.94	1.00	0.56	0.70	0.84	0.97	0.33	0.45	0.58	0.71
		PI	2.93	2.93	2.93	2.93	2.94	2.94	2.94	2.94	2.95	2.95	2.95	2.95	2.97	2.97	2.97	2.97
	50	TC	6.12	6.17	6.23	6.29	6.54	6.54	6.60	6.65	6.74	6.74	6.74	6.80	7.30	7.30	7.30	7.30
		S/T	0.91	1.00	1.00	1.00	0.68	0.83	0.98	1.00	0.57	0.72	0.86	1.00	0.32	0.46	0.59	0.73
		PI	3.17	3.17	3.17	3.17	3.19	3.19	3.19	3.19	3.20	3.20	3.20	3.20	3.22	3.22	3.22	3.22
1800	-15	TC	9.40	9.49	9.58	9.67	9.89	9.89	9.98	10.07	10.12	10.12	10.12	10.20	10.76	10.76	10.76	10.76
		S/T	0.81	0.94	0.98	1.00	0.62	0.73	0.86	0.97	0.53	0.65	0.76	0.88	0.32	0.43	0.54	0.66
		PI	1.70	1.70	1.70	1.70	1.69	1.69	1.69	1.69	1.69	1.69	1.69	1.69	1.69	1.69	1.69	1.69
	-10	TC	9.35	9.44	9.53	9.62	9.83	9.83	9.92	10.01	10.06	10.06	10.06	10.15	10.73	10.73	10.73	10.73
		S/T	0.82	0.94	0.99	1.00	0.62	0.74	0.86	0.97	0.53	0.65	0.77	0.88	0.32	0.44	0.54	0.66
		PI	1.69	1.69	1.69	1.69	1.69	1.69	1.69	1.69	1.69	1.69	1.69	1.69	1.69	1.69	1.69	1.69
	-5	TC	9.29	9.38	9.47	9.56	9.80	9.80	9.89	9.98	10.03	10.03	10.03	10.12	10.70	10.70	10.70	10.70
		S/T	0.82	0.95	0.99	1.00	0.62	0.74	0.87	0.98	0.54	0.65	0.77	0.89	0.32	0.44	0.55	0.66
		PI	1.69	1.69	1.69	1.69	1.68	1.68	1.68	1.68	1.69	1.69	1.69	1.69	1.69	1.69	1.69	1.69
	0	TC	9.24	9.33	9.42	9.51	9.76	9.76	9.85	9.94	10.00	10.00	10.00	10.09	10.69	10.69	10.69	10.69
		S/T	0.82	0.95	1.00	1.00	0.63	0.74	0.87	0.98	0.54	0.66	0.77	0.89	0.32	0.44	0.55	0.67
		PI	1.69	1.69	1.69	1.69	1.69	1.69	1.69	1.69	1.70	1.70	1.70	1.70	1.70	1.70	1.70	1.70
	5	TC	9.20	9.29	9.37	9.46	9.72	9.72	9.81	9.90	9.97	9.97	9.97	10.06	10.68	10.68	10.68	10.68
		S/T	0.83	0.96	1.00	1.00	0.63	0.75	0.88	0.99	0.54	0.66	0.78	0.90	0.33	0.44	0.55	0.67
		PI	1.71	1.71	1.71	1.71	1.71	1.71	1.71	1.71	1.71	1.71	1.71	1.71	1.71	1.71	1.71	1.71
	10	TC	9.14	9.23	9.32	9.41	9.68	9.68	9.77	9.85	9.93	9.93	9.93	10.01	10.65	10.65	10.65	10.65
		S/T	0.83	0.96	1.00	1.00	0.63	0.75	0.88	0.99	0.54	0.66	0.78	0.90	0.33	0.45	0.55	0.67
		PI	1.74	1.74	1.74	1.74	1.73	1.73	1.73	1.73	1.74	1.74	1.74	1.74	1.73	1.73	1.73	1.73
	15	TC	9.07	9.15	9.24	9.33	9.61	9.61	9.70	9.79	9.87	9.87	9.87	9.95	10.61	10.61	10.61	10.61
		S/T	0.84	0.97	1.00	1.00	0.64	0.76	0.89	1.00	0.55	0.67	0.79	0.91	0.33	0.45	0.56	0.68
		PI	1.78	1.78	1.78	1.78	1.77	1.77	1.77	1.77	1.77	1.77	1.77	1.77	1.77	1.77	1.77	1.77
	20	TC	8.96	9.05	9.14	9.22	9.51	9.51	9.60	9.68	9.77	9.77	9.77	9.86	10.52	10.52	10.52	10.52
		S/T	0.84	0.97	1.00	1.00	0.64	0.76	0.89	1.00	0.55	0.67	0.79	0.91	0.33	0.45	0.56	0.68
		PI	1.84	1.84	1.84	1.84	1.83	1.83	1.83	1.83	1.83	1.83	1.83	1.83	1.82	1.82	1.82	1.82
	25	TC	8.53	8.62	8.71	8.79	9.08	9.08	9.17	9.25	9.34	9.34	9.34	9.42	10.06	10.06	10.06	10.06
		S/T	0.86	0.99	1.00	1.00	0.65	0.78	0.91	1.00	0.55	0.68	0.81	0.93	0.33	0.45	0.57	0.69
		PI	2.03	2.03	2.03	2.03	2.03	2.03	2.03	2.03	2.03	2.03	2.03	2.03	2.03	2.03	2.03	2.03
	30	TC	8.13	8.22	8.30	8.39	8.65	8.65	8.74	8.82	8.91	8.91	8.91	8.99	9.63	9.63	9.63	9.63
		S/T	0.87	1.00	1.00	1.00	0.66	0.80	0.93	1.00	0.56	0.69	0.83	0.96	0.33	0.45	0.58	0.70
		PI	2.23	2.23	2.23	2.23	2.23	2.23	2.23	2.23	2.24	2.24	2.24	2.24	2.25	2.25	2.25	2.25
	35	TC	7.73	7.82	7.90	7.99	8.25	8.25	8.33	8.42	8.48	8.48	8.62	8.71	9.17	9.17	9.17	9.17
		S/T	0.90	1.00	1.00	1.00	0.67	0.81	0.96	1.00	0.56	0.71	0.84	0.98	0.32	0.46	0.59	0.72
		PI	2.43	2.43	2.43	2.43	2.44	2.44	2.44	2.44	2.45	2.45	2.45	2.45	2.45	2.45	2.45	2.45
	40	TC	7.29	7.37	7.44	7.51	7.79	7.79	7.87	7.96	8.02	8.02	8.13	8.22	8.67	8.67	8.67	8.67
		S/T	0.94	1.00	1.00	1.00	0.69	0.85	1.00	1.00	0.58	0.73	0.89	1.00	0.32	0.46	0.61	0.75
		PI	2.69	2.69	2.69	2.69	2.70	2.70	2.70	2.70	2.71	2.71	2.71	2.71	2.72	2.72	2.72	2.72
	46	TC	6.76	6.82	6.87	6.93	7.22	7.22	7.31	7.39	7.45	7.45	7.54	7.62	8.05	8.05	8.05	8.05
		S/T	0.96	1.00	1.00	1.00	0.70	0.87	1.00	1.00	0.58	0.75	0.90	1.00	0.32	0.47	0.62	0.77
		PI	2.99	2.99	2.99	2.99	3.00	3.00	3.00	3.00	3.01	3.01	3.01	3.01	3.03	3.03	3.03	3.03
	50	TC	6.33	6.39	6.44	6.50	6.76	6.82	6.87	6.93	6.99	6.99	7.05	7.11	7.59	7.59	7.59	7.59
		S/T	0.99	1.00	1.00	1.00	0.72	0.90	1.00	1.00	0.60	0.77	0.94	1.00	0.31	0.47	0.63	0.91
		PI	3.24	3.24	3.24	3.24	3.25	3.25	3.25	3.25	3.26	3.26	3.26	3.26	3.29	3.29	3.29	3.29

2100	-15	TC	9.58	9.67	9.76	9.85	10.07	10.07	10.16	10.25	10.32	10.32	10.32	10.41	10.97	10.97	10.97	10.97
		S/T	0.86	0.97	1.00	1.00	0.65	0.78	0.92	0.98	0.54	0.68	0.82	0.95	0.31	0.44	0.57	0.70
		PI	1.73	1.73	1.73	1.73	1.73	1.73	1.73	1.73	1.73	1.73	1.73	1.73	1.72	1.72	1.72	1.72
	-10	TC	9.53	9.62	9.71	9.80	10.01	10.01	10.10	10.19	10.27	10.27	10.27	10.36	10.93	10.93	10.93	10.93
		S/T	0.86	0.97	1.00	1.00	0.65	0.79	0.92	0.98	0.54	0.68	0.82	0.95	0.31	0.45	0.57	0.70
		PI	1.73	1.73	1.73	1.73	1.72	1.72	1.72	1.72	1.73	1.73	1.73	1.73	1.73	1.73	1.73	1.73
	-5	TC	9.47	9.56	9.65	9.74	9.98	9.98	10.06	10.15	10.23	10.23	10.23	10.32	10.90	10.90	10.90	10.90
		S/T	0.87	0.98	1.00	1.00	0.65	0.79	0.93	0.99	0.55	0.68	0.83	0.96	0.31	0.45	0.58	0.70
		PI	1.72	1.72	1.72	1.72	1.72	1.72	1.72	1.72	1.73	1.73	1.73	1.73	1.73	1.73	1.73	1.73
	0	TC	9.42	9.51	9.60	9.69	9.94	9.94	10.03	10.11	10.21	10.21	10.21	10.29	10.89	10.89	10.89	10.89
		S/T	0.87	0.98	1.00	1.00	0.66	0.79	0.93	0.99	0.55	0.69	0.83	0.96	0.31	0.45	0.58	0.71
		PI	1.73	1.73	1.73	1.73	1.73	1.73	1.73	1.73	1.73	1.73	1.73	1.73	1.74	1.74	1.74	1.74
	5	TC	9.37	9.46	9.55	9.64	9.90	9.90	9.99	10.08	10.17	10.17	10.17	10.26	10.88	10.88	10.88	10.88
		S/T	0.88	0.99	1.00	1.00	0.66	0.80	0.94	1.00	0.55	0.69	0.84	0.97	0.32	0.45	0.58	0.71
		PI	1.75	1.75	1.75	1.75	1.74	1.74	1.74	1.74	1.75	1.75	1.75	1.75	1.75	1.75	1.75	1.75
	10	TC	9.32	9.41	9.49	9.58	9.85	9.85	9.94	10.03	10.13	10.13	10.13	10.22	10.86	10.86	10.86	10.86
		S/T	0.88	0.99	1.00	1.00	0.66	0.80	0.94	1.00	0.55	0.69	0.84	0.97	0.32	0.46	0.58	0.71
		PI	1.78	1.78	1.78	1.78	1.77	1.77	1.77	1.77	1.77	1.77	1.77	1.77	1.77	1.77	1.77	1.77
	15	TC	9.24	9.33	9.42	9.50	9.79	9.79	9.87	9.96	10.07	10.07	10.07	10.16	10.81	10.81	10.81	10.81
		S/T	0.89	1.00	1.00	1.00	0.67	0.81	0.95	1.00	0.56	0.70	0.85	0.98	0.32	0.46	0.59	0.72
		PI	1.82	1.82	1.82	1.82	1.81	1.81	1.81	1.81	1.81	1.81	1.81	1.81	1.81	1.81	1.81	1.81
	20	TC	9.14	9.22	9.31	9.40	9.68	9.68	9.77	9.86	9.97	9.97	9.97	10.06	10.72	10.72	10.72	10.72
		S/T	0.89	1.00	1.00	1.00	0.67	0.81	0.95	1.00	0.56	0.70	0.85	0.98	0.32	0.46	0.59	0.72
		PI	1.88	1.88	1.88	1.88	1.87	1.87	1.87	1.87	1.87	1.87	1.87	1.87	1.86	1.86	1.86	1.86
	25	TC	8.71	8.79	8.88	8.96	9.25	9.25	9.34	9.42	9.54	9.54	9.54	9.63	10.26	10.26	10.26	10.26
		S/T	0.91	1.00	1.00	1.00	0.68	0.83	0.98	1.00	0.57	0.72	0.86	1.00	0.32	0.46	0.60	0.73
		PI	2.07	2.07	2.07	2.07	2.07	2.07	2.07	2.07	2.07	2.07	2.07	2.07	2.07	2.07	2.07	2.07
	30	TC	8.30	8.39	8.48	8.56	8.82	8.82	8.91	8.99	9.11	9.11	9.19	9.28	9.80	9.80	9.80	9.80
		S/T	0.93	1.00	1.00	1.00	0.69	0.85	1.00	1.00	0.58	0.73	0.88	1.00	0.32	0.46	0.61	0.75
		PI	2.27	2.27	2.27	2.27	2.27	2.27	2.27	2.27	2.27	2.27	2.27	2.27	2.28	2.28	2.28	2.28
	35	TC	7.90	7.99	8.07	8.16	8.39	8.39	8.48	8.56	8.65	8.65	**8.79**	8.88	9.34	9.34	9.34	9.34
		S/T	0.96	1.00	1.00	1.00	0.70	0.87	1.00	1.00	0.58	0.75	**0.90**	1.00	0.32	0.47	0.62	0.77
		PI	2.48	2.48	2.48	2.48	2.49	2.49	2.49	2.49	2.50	2.50	**2.50**	2.50	2.51	2.51	2.51	2.51
	40	TC	7.44	7.51	7.59	7.66	7.93	7.97	8.05	8.14	8.17	8.17	8.29	8.38	8.84	8.84	8.84	8.84
		S/T	1.00	1.00	1.00	1.00	0.73	0.91	1.00	1.00	0.60	0.78	0.95	1.00	0.31	0.48	0.64	0.90
		PI	2.74	2.74	2.74	2.74	2.75	2.75	2.75	2.75	2.76	2.76	2.76	2.76	2.78	2.78	2.78	2.78
	46	TC	6.87	6.93	6.99	7.05	7.36	7.45	7.54	7.62	7.59	7.59	7.68	7.77	8.23	8.23	8.23	8.23
		S/T	1.00	1.00	1.00	1.00	0.74	0.93	1.00	1.00	0.61	0.80	0.98	1.00	0.31	0.48	0.65	0.92
		PI	3.05	3.05	3.05	3.05	3.06	3.06	3.06	3.06	3.07	3.07	3.07	3.07	3.10	3.10	3.10	3.10
	50	TC	6.47	6.53	6.59	6.64	6.90	6.96	7.02	7.08	7.13	7.13	7.19	7.28	7.74	7.74	7.74	7.74
		S/T	1.00	1.00	1.00	1.00	0.76	0.96	1.00	1.00	0.62	0.82	1.00	1.00	0.30	0.49	0.67	0.97
		PI	3.31	3.31	3.31	3.31	3.32	3.32	3.32	3.32	3.33	3.33	3.33	3.33	3.35	3.35	3.35	3.35

TC:Total Cooling Capacity (kW)

S/T:Sensible Cooling Capacity Ratio

PI:Power Input(kW)

Note: The table shows the case where the operation frequency of a compressor is fixed.

36k+YDAX-100H-09M25																		
INDOOR AIRFLOW (CMH)	OUTDOOR DB(℃)	ID WB (℃)	16.0				18.0				19.0				22.0			
		ID DB (℃)	23.0	25.0	27.0	29.0	23.0	25.0	27.0	29.0	23.0	25.0	27.0	29.0	23.0	25.0	27.0	29.0
1500	-15	TC	11.05	11.06	11.18	11.30	11.63	11.87	11.87	11.99	11.90	11.90	11.90	11.90	12.65	12.65	12.65	12.65
		S/T	0.71	0.81	0.90	0.97	0.57	0.65	0.74	0.83	0.50	0.59	0.67	0.75	0.35	0.42	0.50	0.58
		PI	2.63	2.63	2.63	2.63	2.62	2.62	2.62	2.62	2.61	2.61	2.61	2.61	2.61	2.61	2.61	2.61
	-10	TC	10.99	11.00	11.11	11.23	11.56	11.80	11.80	11.92	11.84	11.84	11.84	11.84	12.60	12.60	12.60	12.60
		S/T	0.72	0.82	0.90	0.97	0.57	0.66	0.75	0.83	0.50	0.59	0.67	0.76	0.35	0.43	0.50	0.58
		PI	2.62	2.61	2.61	2.62	2.61	2.61	2.61	2.61	2.61	2.61	2.61	2.61	2.62	2.62	2.62	2.62
	-5	TC	10.92	10.93	11.05	11.17	11.52	11.76	11.76	11.88	11.80	11.80	11.80	11.80	12.57	12.57	12.57	12.57
		S/T	0.72	0.82	0.91	0.98	0.58	0.66	0.75	0.84	0.51	0.59	0.67	0.76	0.35	0.43	0.51	0.59
		PI	2.61	2.61	2.61	2.61	2.61	2.61	2.61	2.61	2.61	2.61	2.61	2.61	2.62	2.62	2.62	2.62
	0	TC	10.87	10.87	10.99	11.11	11.47	11.71	11.71	11.83	11.77	11.77	11.77	11.77	12.56	12.56	12.56	12.56
		S/T	0.73	0.82	0.91	0.98	0.58	0.66	0.75	0.84	0.51	0.60	0.68	0.76	0.35	0.43	0.51	0.59
		PI	2.62	2.62	2.62	2.62	2.62	2.62	2.62	2.62	2.62	2.62	2.62	2.62	2.63	2.63	2.63	2.63
	5	TC	10.81	10.82	10.94	11.06	11.43	11.67	11.67	11.79	11.73	11.73	11.73	11.73	12.55	12.55	12.55	12.55
		S/T	0.73	0.83	0.92	0.99	0.58	0.67	0.76	0.85	0.51	0.60	0.68	0.77	0.35	0.43	0.51	0.59
		PI	2.65	2.64	2.64	2.65	2.64	2.64	2.64	2.64	2.64	2.64	2.64	2.64	2.65	2.65	2.65	2.65
	10	TC	10.75	10.75	10.87	10.99	11.38	11.61	11.61	11.73	11.68	11.68	11.68	11.68	12.52	12.52	12.52	12.52
		S/T	0.73	0.83	0.92	0.99	0.58	0.67	0.76	0.85	0.51	0.60	0.68	0.77	0.36	0.44	0.51	0.59
		PI	2.69	2.69	2.69	2.69	2.68	2.68	2.68	2.68	2.68	2.68	2.68	2.68	2.68	2.68	2.68	2.68
	15	TC	10.66	10.67	10.78	10.90	11.30	11.54	11.54	11.65	11.61	11.61	11.61	11.61	12.46	12.46	12.46	12.46
		S/T	0.74	0.84	0.93	1.00	0.59	0.67	0.77	0.86	0.52	0.61	0.69	0.78	0.36	0.44	0.52	0.60
		PI	2.76	2.75	2.75	2.76	2.75	2.75	2.75	2.75	2.74	2.74	2.74	2.74	2.74	2.74	2.74	2.74
	20	TC	10.54	10.55	10.66	10.78	11.18	11.18	11.18	11.18	11.50	11.50	11.50	11.50	12.36	12.36	12.36	12.36
		S/T	0.74	0.84	0.93	1.00	0.59	0.68	0.77	0.86	0.52	0.61	0.69	0.78	0.36	0.44	0.52	0.60
		PI	2.85	2.85	2.85	2.85	2.84	2.84	2.84	2.84	2.83	2.83	2.83	2.83	2.82	2.82	2.82	2.82
	25	TC	10.06	10.06	10.17	10.29	10.69	10.69	10.69	10.69	11.01	11.01	11.01	11.01	11.84	11.84	11.84	11.84
		S/T	0.75	0.85	0.95	1.00	0.59	0.69	0.78	0.88	0.52	0.61	0.70	0.79	0.35	0.44	0.52	0.61
		PI	3.14	3.14	3.14	3.14	3.14	3.14	3.14	3.14	3.14	3.14	3.14	3.14	3.14	3.14	3.14	3.14
	30	TC	9.57	9.57	9.66	9.74	10.20	10.20	10.20	10.32	10.49	10.49	10.49	10.49	11.32	11.32	11.32	11.32
		S/T	0.76	0.87	0.97	1.00	0.60	0.70	0.80	0.89	0.52	0.62	0.71	0.81	0.35	0.44	0.53	0.62
		PI	3.44	3.44	3.44	3.44	3.45	3.45	3.45	3.45	3.46	3.46	3.46	3.46	3.47	3.47	3.47	3.47
	35	TC	9.11	9.20	9.28	9.37	9.68	9.68	9.68	9.77	10.00	10.00	10.14	10.00	10.78	10.78	10.78	10.78
		S/T	0.78	0.88	0.99	1.00	0.61	0.71	0.81	0.91	0.53	0.63	0.72	0.83	0.35	0.44	0.53	0.63
		PI	3.76	3.76	3.76	3.76	3.78	3.78	3.78	3.78	3.78	3.78	3.79	3.78	3.81	3.81	3.81	3.81
	40	TC	8.49	8.58	8.66	8.75	9.05	9.05	9.05	9.13	9.34	9.34	9.41	9.34	10.08	10.08	10.08	10.08
		S/T	0.80	0.92	1.00	1.00	0.62	0.73	0.85	0.96	0.53	0.64	0.76	0.87	0.34	0.44	0.54	0.65
		PI	4.15	4.15	4.15	4.15	4.17	4.17	4.17	4.17	4.18	4.18	4.18	4.18	4.21	4.21	4.21	4.21
	46	TC	7.86	7.94	8.03	8.11	8.40	8.40	8.40	8.48	8.65	8.65	8.65	8.65	9.37	9.37	9.37	9.37
		S/T	0.82	0.94	1.00	1.00	0.63	0.74	0.86	0.98	0.54	0.65	0.77	0.88	0.34	0.44	0.55	0.66
		PI	4.62	4.62	4.62	4.62	4.64	4.64	4.64	4.64	4.65	4.65	4.65	4.65	4.69	4.69	4.69	4.69
	50	TC	7.37	7.46	7.54	7.63	7.88	7.88	7.97	8.06	8.14	8.14	8.14	8.23	8.82	8.82	8.82	8.82
		S/T	0.84	0.97	1.00	1.00	0.64	0.76	0.89	1.00	0.54	0.67	0.79	0.91	0.33	0.45	0.56	0.67
		PI	5.00	5.00	5.00	5.00	5.02	5.02	5.02	5.02	5.03	5.03	5.03	5.03	5.07	5.07	5.07	5.07
1800	-15	TC	11.28	11.40	11.52	11.64	11.87	11.87	11.87	11.99	12.15	12.15	12.15	12.15	12.92	12.92	12.92	12.92
		S/T	0.75	0.86	0.98	1.00	0.59	0.69	0.79	0.89	0.51	0.61	0.70	0.81	0.33	0.42	0.52	0.61
		PI	2.68	2.68	2.68	2.68	2.68	2.68	2.68	2.68	2.67	2.67	2.67	2.67	2.67	2.67	2.67	2.67
	-10	TC	11.21	11.33	11.45	11.57	11.80	11.80	11.80	11.92	12.08	12.08	12.08	12.08	12.87	12.87	12.87	12.87
		S/T	0.76	0.86	0.99	1.00	0.59	0.69	0.80	0.89	0.51	0.61	0.71	0.82	0.33	0.43	0.52	0.61
		PI	2.67	2.67	2.67	2.67	2.67	2.67	2.67	2.67	2.67	2.67	2.67	2.67	2.67	2.67	2.67	2.67
	-5	TC	11.14	11.26	11.38	11.50	11.76	11.76	11.76	11.88	12.04	12.04	12.04	12.04	12.84	12.84	12.84	12.84
		S/T	0.76	0.87	0.99	1.00	0.59	0.69	0.80	0.90	0.52	0.61	0.71	0.82	0.33	0.43	0.53	0.61
		PI	2.67	2.67	2.67	2.67	2.67	2.67	2.67	2.67	2.67	2.67	2.67	2.67	2.67	2.67	2.67	2.67
	0	TC	11.09	11.21	11.32	11.44	11.71	11.71	11.71	11.83	12.01	12.01	12.01	12.01	12.83	12.83	12.83	12.83
		S/T	0.76	0.87	1.00	1.00	0.60	0.70	0.80	0.90	0.52	0.62	0.72	0.82	0.33	0.43	0.53	0.62
		PI	2.68	2.68	2.68	2.68	2.68	2.68	2.68	2.68	2.68	2.68	2.68	2.68	2.68	2.68	2.68	2.68
	5	TC	11.03	11.15	11.27	11.38	11.67	11.67	11.67	11.79	11.97	11.97	11.97	11.97	12.82	12.82	12.82	12.82
		S/T	0.77	0.88	1.00	1.00	0.60	0.70	0.81	0.91	0.52	0.62	0.72	0.83	0.33	0.43	0.53	0.62
		PI	2.70	2.70	2.70	2.70	2.70	2.70	2.70	2.70	2.70	2.70	2.70	2.70	2.70	2.70	2.70	2.70
	10	TC	10.96	11.08	11.20	11.32	11.61	11.61	11.61	11.73	11.92	11.92	11.92	11.92	12.78	12.78	12.78	12.78
		S/T	0.77	0.88	1.00	1.00	0.60	0.70	0.81	0.91	0.52	0.62	0.72	0.83	0.34	0.44	0.53	0.62
		PI	2.75	2.75	2.75	2.75	2.74	2.74	2.74	2.74	2.74	2.74	2.74	2.74	2.74	2.74	2.74	2.74
	15	TC	10.87	10.99	11.11	11.22	11.54	11.54	11.54	11.65	11.85	11.85	11.85	11.85	12.73	12.73	12.73	12.73
		S/T	0.78	0.89	0.99	1.00	0.61	0.71	0.82	0.92	0.53	0.63	0.73	0.84	0.34	0.44	0.54	0.63
		PI	2.81	2.81	2.81	2.81	2.81	2.81	2.81	2.81	2.80	2.80	2.80	2.80	2.80	2.80	2.80	2.80
	20	TC	10.75	10.87	10.98	11.10	11.41	11.41	11.41	11.53	11.73	11.73	11.73	11.73	12.62	12.62	12.62	12.62
		S/T	0.78	0.89	0.99	1.00	0.61	0.71	0.82	0.92	0.53	0.63	0.73	0.84	0.34	0.44	0.54	0.63
		PI	2.91	2.91	2.91	2.91	2.90	2.90	2.90	2.90	2.89	2.89	2.89	2.89	2.88	2.88	2.88	2.88
	25	TC	10.26	10.38	10.49	10.61	10.90	10.90	10.90	11.01	11.21	11.21	11.21	11.21	12.07	12.07	12.07	12.07
		S/T	0.79	0.91	1.00	1.00	0.61	0.73	0.84	0.94	0.53	0.64	0.75	0.86	0.34	0.44	0.54	0.64
		PI	3.21	3.21	3.21	3.21	3.21	3.21	3.21	3.21	3.21	3.21	3.21	3.21	3.21	3.21	3.21	3.21
	30	TC	9.77	9.86	9.95	10.03	10.41	10.41	10.41	10.52	10.72	10.72	10.72	10.72	11.53	11.53	11.53	11.53
		S/T	0.81	0.93	1.00	1.00	0.62	0.74	0.85	0.97	0.54	0.65	0.76	0.87	0.34	0.44	0.55	0.65
		PI	3.52	3.52	3.52	3.52	3.52	3.52	3.52	3.52	3.53	3.53	3.53	3.53	3.54	3.54	3.54	3.54
	35	TC	9.29	9.37	9.46	9.54	9.89	9.89	9.89	9.98	10.18	10.18	10.35	10.46	10.98	10.98	10.98	10.98
		S/T	0.83	0.95	1.00	1.00	0.63	0.75	0.88	0.99	0.54	0.66	0.77	0.89	0.34	0.45	0.56	0.67
		PI	3.84	3.84	3.84	3.84	3.86	3.86	3.86	3.86	3.86	3.86	3.87	3.86	3.86	3.86	3.86	3.86
	40	TC	8.67	8.76	8.84	8.93	9.24	9.24	9.28	9.37	9.52	9.52	9.61	9.71	10.29	10.29	10.29	10.29
		S/T	0.86	1.00	1.00	1.00	0.65	0.78	0.91	1.00	0.55	0.68	0.81	0.94	0.33	0.45	0.57	0.69
		PI	4.24	4.24	4.24	4.24	4.26	4.26	4.26	4.26	4.27	4.27	4.27	4.27	4.28	4.28	4.28	4.28
	46	TC	8.03	8.12	8.20	8.29	8.58	8.58	8.66	8.75	8.83	8.83	8.83	8.92	9.57	9.57	9.57	9.57
		S/T	0.88	1.00	1.00	1.00	0.66	0.80	0.93	1.00	0.56	0.69	0.83	0.96	0.33	0.45	0.58	0.70
		PI	4.71	4.71	4.71	4.71	4.74	4.74	4.74	4.74	4.75	4.75	4.75	4.75	4.79	4.79	4.79	4.79
	50	TC	7.52	7.61	7.69	7.78	8.06	8.06	8.15	8.23	8.32	8.32	8.32	8.40	9.03	9.03	9.03	9.03
		S/T	0.90	1.00	1.00	1.00	0.67	0.82	0.96	1.00	0.57	0.71	0.85	0.99	0.32	0.46	0.59	0.91
		PI	5.10	5.10	5.10	5.10	5.13	5.13	5.13	5.13	5.14	5.14	5.14	5.14	5.18	5.18	5.18	5.18

2100	-15	TC	11.49	11.61	11.73	11.85	12.08	12.08	12.08	12.20	12.38	12.38	12.38	12.50	13.15	13.15	13.15	13.15
		S/T	0.79	0.92	1.00	1.00	0.61	0.72	0.84	0.98	0.52	0.64	0.75	0.86	0.33	0.43	0.53	0.64
		PI	2.74	2.74	2.74	2.74	2.73	2.73	2.73	2.73	2.72	2.72	2.72	2.72	2.72	2.72	2.72	2.72
	-10	TC	11.42	11.54	11.66	11.78	12.01	12.01	12.01	12.13	12.32	12.32	12.32	12.44	13.11	13.11	13.11	13.11
		S/T	0.80	0.92	1.00	1.00	0.61	0.73	0.84	0.98	0.52	0.64	0.76	0.86	0.33	0.44	0.53	0.64
		PI	2.72	2.72	2.72	2.72	2.72	2.72	2.72	2.72	2.72	2.72	2.72	2.72	2.73	2.73	2.73	2.73
	-5	TC	11.35	11.47	11.59	11.71	11.97	11.97	11.97	12.08	12.28	12.28	12.28	12.39	13.07	13.07	13.07	13.07
		S/T	0.80	0.93	1.00	1.00	0.61	0.73	0.85	0.99	0.53	0.64	0.76	0.87	0.33	0.44	0.54	0.64
		PI	2.72	2.72	2.72	2.72	2.72	2.72	2.72	2.72	2.72	2.72	2.72	2.72	2.73	2.73	2.73	2.73
	0	TC	11.29	11.41	11.53	11.65	11.92	11.92	11.92	12.04	12.24	12.24	12.24	12.36	13.06	13.06	13.06	13.06
		S/T	0.80	0.93	1.00	1.00	0.62	0.74	0.85	0.99	0.53	0.65	0.76	0.87	0.33	0.44	0.54	0.65
		PI	2.73	2.73	2.73	2.73	2.73	2.73	2.73	2.73	2.73	2.73	2.73	2.73	2.74	2.74	2.74	2.74
	5	TC	11.24	11.36	11.47	11.59	11.87	11.87	11.87	11.99	12.20	12.20	12.20	12.32	13.05	13.05	13.05	13.05
		S/T	0.81	0.94	1.00	1.00	0.62	0.74	0.86	1.00	0.53	0.65	0.77	0.88	0.33	0.44	0.54	0.65
		PI	2.76	2.76	2.76	2.76	2.76	2.76	2.76	2.76	2.75	2.75	2.75	2.75	2.76	2.76	2.76	2.76
	10	TC	11.17	11.29	11.40	11.52	11.82	11.82	11.82	11.94	12.15	12.15	12.15	12.27	13.02	13.02	13.02	13.02
		S/T	0.81	0.94	1.00	1.00	0.62	0.74	0.86	1.00	0.53	0.65	0.77	0.88	0.34	0.45	0.54	0.65
		PI	2.80	2.80	2.80	2.80	2.80	2.80	2.80	2.80	2.79	2.79	2.79	2.79	2.80	2.80	2.80	2.80
	15	TC	11.08	11.19	11.31	11.43	11.74	11.74	11.74	11.86	12.08	12.08	12.08	12.19	12.96	12.96	12.96	12.96
		S/T	0.82	0.95	1.00	1.00	0.63	0.75	0.87	0.99	0.54	0.66	0.78	0.89	0.34	0.45	0.55	0.66
		PI	2.87	2.87	2.87	2.87	2.86	2.86	2.86	2.86	2.86	2.86	2.86	2.86	2.85	2.85	2.85	2.85
	20	TC	10.95	11.07	11.18	11.30	11.61	11.61	11.61	11.73	11.96	11.96	11.96	12.07	12.85	12.85	12.85	12.85
		S/T	0.82	0.95	1.00	1.00	0.63	0.75	0.87	0.99	0.54	0.66	0.78	0.89	0.34	0.45	0.55	0.66
		PI	2.97	2.97	2.97	2.97	2.96	2.96	2.96	2.96	2.95	2.95	2.95	2.95	2.94	2.94	2.94	2.94
	25	TC	10.46	10.58	10.69	10.81	11.10	11.10	11.21	11.33	11.44	11.44	11.44	11.56	12.30	12.30	12.30	12.30
		S/T	0.84	0.97	1.00	1.00	0.64	0.77	0.89	1.00	0.55	0.67	0.79	0.91	0.33	0.45	0.56	0.68
		PI	3.27	3.27	3.27	3.27	3.27	3.27	3.27	3.27	3.27	3.27	3.27	3.27	3.27	3.27	3.27	3.27
	30	TC	9.98	10.06	10.18	10.29	10.61	10.61	10.72	10.84	10.92	10.92	10.92	11.04	11.76	11.76	11.76	11.76
		S/T	0.86	0.99	1.00	1.00	0.65	0.78	0.91	1.00	0.55	0.68	0.81	0.93	0.33	0.45	0.57	0.69
		PI	3.59	3.59	3.59	3.59	3.60	3.60	3.60	3.60	3.60	3.60	3.60	3.60	3.62	3.62	3.62	3.62
	35	TC	9.46	9.54	9.63	9.72	10.06	10.06	10.18	10.29	10.38	10.38	**10.55**	10.67	11.21	11.21	11.21	11.21
		S/T	0.88	1.00	1.00	1.00	0.66	0.80	0.93	1.00	0.56	0.69	**0.82**	0.95	0.33	0.45	0.58	0.70
		PI	3.92	3.92	3.92	3.92	3.94	3.94	3.94	3.94	3.94	3.94	**3.95**	3.94	3.97	3.97	3.97	3.97
	40	TC	8.83	8.91	9.00	9.09	9.40	9.40	9.50	9.60	9.70	9.70	9.83	9.93	10.50	10.50	10.50	10.50
		S/T	0.92	1.00	1.00	1.00	0.68	0.83	0.98	1.00	0.57	0.72	0.87	1.00	0.32	0.46	0.60	0.90
		PI	4.32	4.32	4.32	4.32	4.34	4.34	4.34	4.34	4.35	4.35	4.36	4.35	4.39	4.39	4.39	4.39
	46	TC	8.18	8.26	8.35	8.43	8.72	8.72	8.80	8.89	9.00	9.00	9.09	9.17	9.77	9.77	9.77	9.77
		S/T	0.94	1.00	1.00	1.00	0.69	0.85	1.00	1.00	0.58	0.73	0.88	1.00	0.32	0.46	0.61	0.92
		PI	4.81	4.81	4.81	4.81	4.83	4.83	4.83	4.83	4.85	4.85	4.85	4.85	4.89	4.89	4.89	4.89
	50	TC	7.66	7.75	7.83	7.92	8.20	8.20	8.29	8.38	8.49	8.49	8.58	8.66	9.20	9.20	9.20	9.20
		S/T	0.97	1.00	1.00	1.00	0.71	0.88	1.00	1.00	0.59	0.75	0.91	1.00	0.32	0.47	0.62	0.97
		PI	5.21	5.21	5.21	5.21	5.23	5.23	5.23	5.23	5.25	5.25	5.25	5.25	5.29	5.29	5.29	5.29

TC:Total Cooling Capacity (kW)

S/T:Sensible Cooling Capacity Ratio

PI:Power Input(kW)

Note: The table shows the case where the operation frequency of a compressor is fixed.

36k+YDAX-100H-09T35																		
INDOOR AIRFLOW (CMH)	OUTDOOR DB(℃)	ID WB (℃)	16.0				18.0				19.0				22.0			
		ID DB (℃)	23.0	25.0	27.0	29.0	23.0	25.0	27.0	29.0	23.0	25.0	27.0	29.0	23.0	25.0	27.0	29.0
1500	-15	TC	11.05	11.06	11.18	11.30	11.63	11.87	11.87	11.99	11.90	11.90	11.90	11.90	12.65	12.65	12.65	12.65
		S/T	0.71	0.81	0.90	0.97	0.57	0.65	0.74	0.83	0.50	0.59	0.67	0.75	0.35	0.42	0.50	0.58
		PI	2.66	2.66	2.66	2.66	2.66	2.66	2.66	2.66	2.65	2.65	2.65	2.65	2.65	2.65	2.65	2.65
	-10	TC	10.99	11.00	11.11	11.23	11.56	11.80	11.80	11.92	11.84	11.84	11.84	11.84	12.60	12.60	12.60	12.60
		S/T	0.72	0.82	0.90	0.97	0.57	0.66	0.75	0.83	0.50	0.59	0.67	0.76	0.35	0.43	0.50	0.58
		PI	2.65	2.65	2.65	2.65	2.65	2.65	2.65	2.65	2.65	2.65	2.65	2.65	2.65	2.65	2.65	2.65
	-5	TC	10.92	10.93	11.05	11.17	11.52	11.76	11.76	11.88	11.80	11.80	11.80	11.80	12.57	12.57	12.57	12.57
		S/T	0.72	0.82	0.91	0.98	0.58	0.66	0.75	0.84	0.51	0.59	0.67	0.76	0.35	0.43	0.51	0.59
		PI	2.65	2.65	2.65	2.65	2.65	2.65	2.65	2.65	2.65	2.65	2.65	2.65	2.66	2.66	2.66	2.66
	0	TC	10.87	10.87	10.99	11.11	11.47	11.71	11.71	11.83	11.77	11.77	11.77	11.77	12.56	12.56	12.56	12.56
		S/T	0.73	0.82	0.91	0.98	0.58	0.66	0.75	0.84	0.51	0.60	0.68	0.76	0.35	0.43	0.51	0.59
		PI	2.66	2.66	2.66	2.66	2.66	2.66	2.66	2.66	2.66	2.66	2.66	2.66	2.67	2.67	2.67	2.67
	5	TC	10.81	10.82	10.94	11.06	11.43	11.67	11.67	11.79	11.73	11.73	11.73	11.73	12.55	12.55	12.55	12.55
		S/T	0.73	0.83	0.92	0.99	0.58	0.67	0.76	0.85	0.51	0.60	0.68	0.77	0.35	0.43	0.51	0.59
		PI	2.68	2.68	2.68	2.68	2.68	2.68	2.68	2.68	2.68	2.68	2.68	2.68	2.69	2.69	2.69	2.69
	10	TC	10.75	10.75	10.87	10.99	11.38	11.61	11.61	11.73	11.68	11.68	11.68	11.68	12.52	12.52	12.52	12.52
		S/T	0.73	0.83	0.92	0.99	0.58	0.67	0.76	0.85	0.51	0.60	0.68	0.77	0.36	0.44	0.51	0.59
		PI	2.73	2.73	2.73	2.73	2.72	2.72	2.72	2.72	2.72	2.72	2.72	2.72	2.72	2.72	2.72	2.72
	15	TC	10.66	10.67	10.78	10.90	11.30	11.54	11.54	11.65	11.61	11.61	11.61	11.61	12.46	12.46	12.46	12.46
		S/T	0.74	0.84	0.93	1.00	0.59	0.67	0.77	0.86	0.52	0.61	0.69	0.78	0.36	0.44	0.52	0.60
		PI	2.79	2.79	2.79	2.79	2.79	2.79	2.79	2.79	2.78	2.78	2.78	2.78	2.78	2.78	2.78	2.78
	20	TC	10.54	10.55	10.66	10.78	11.18	11.18	11.18	11.18	11.50	11.50	11.50	11.50	12.36	12.36	12.36	12.36
		S/T	0.74	0.84	0.93	1.00	0.59	0.68	0.77	0.86	0.52	0.61	0.69	0.78	0.36	0.44	0.52	0.60
		PI	2.89	2.89	2.89	2.89	2.88	2.88	2.88	2.88	2.87	2.87	2.87	2.87	2.86	2.86	2.86	2.86
	25	TC	10.06	10.06	10.17	10.29	10.69	10.69	10.69	10.69	11.01	11.01	11.01	11.01	11.84	11.84	11.84	11.84
		S/T	0.75	0.85	0.95	1.00	0.59	0.69	0.78	0.88	0.52	0.61	0.70	0.79	0.35	0.44	0.52	0.61
		PI	3.19	3.19	3.19	3.19	3.19	3.19	3.19	3.19	3.19	3.19	3.19	3.19	3.19	3.19	3.19	3.19
	30	TC	9.57	9.57	9.66	9.74	10.20	10.20	10.20	10.32	10.49	10.49	10.49	10.49	11.32	11.32	11.32	11.32
		S/T	0.76	0.87	0.97	1.00	0.60	0.70	0.80	0.89	0.52	0.62	0.71	0.81	0.35	0.44	0.53	0.62
		PI	3.49	3.49	3.49	3.49	3.50	3.50	3.50	3.50	3.50	3.50	3.50	3.50	3.52	3.52	3.52	3.52
	35	TC	9.11	9.20	9.28	9.37	9.68	9.68	9.68	9.77	10.00	10.00	10.14	10.00	10.78	10.78	10.78	10.78
		S/T	0.78	0.88	0.99	1.00	0.61	0.71	0.81	0.91	0.53	0.63	0.72	0.83	0.35	0.44	0.53	0.63
		PI	3.81	3.81	3.81	3.81	3.83	3.83	3.83	3.83	3.83	3.83	3.84	3.83	3.86	3.86	3.86	3.86
	40	TC	8.49	8.58	8.66	8.75	9.05	9.05	9.05	9.13	9.34	9.34	9.41	9.34	10.08	10.08	10.08	10.08
		S/T	0.80	0.92	1.00	1.00	0.62	0.73	0.85	0.96	0.53	0.64	0.76	0.87	0.34	0.44	0.54	0.65
		PI	4.21	4.21	4.21	4.21	4.23	4.23	4.23	4.23	4.23	4.23	4.24	4.23	4.26	4.26	4.26	4.26
	46	TC	7.86	7.94	8.03	8.11	8.40	8.40	8.40	8.48	8.65	8.65	8.65	8.65	9.37	9.37	9.37	9.37
		S/T	0.82	0.94	1.00	1.00	0.63	0.74	0.86	0.98	0.54	0.65	0.77	0.88	0.34	0.44	0.55	0.66
		PI	4.68	4.68	4.68	4.68	4.70	4.70	4.70	4.70	4.71	4.71	4.71	4.71	4.75	4.75	4.75	4.75
	50	TC	7.37	7.46	7.54	7.63	7.88	7.88	7.97	8.06	8.14	8.14	8.14	8.23	8.82	8.82	8.82	8.82
		S/T	0.84	0.97	1.00	1.00	0.64	0.76	0.89	1.00	0.54	0.67	0.79	0.91	0.33	0.45	0.56	0.67
		PI	5.06	5.06	5.06	5.06	5.09	5.09	5.09	5.09	5.10	5.10	5.10	5.10	5.14	5.14	5.14	5.14
1800	-15	TC	11.28	11.40	11.52	11.64	11.87	11.87	11.87	11.99	12.15	12.15	12.15	12.15	12.92	12.92	12.92	12.92
		S/T	0.75	0.86	0.98	1.00	0.59	0.69	0.79	0.89	0.51	0.61	0.70	0.81	0.33	0.42	0.52	0.61
		PI	2.72	2.72	2.72	2.72	2.71	2.71	2.71	2.71	2.71	2.71	2.71	2.71	2.71	2.71	2.71	2.71
	-10	TC	11.21	11.33	11.45	11.57	11.80	11.80	11.80	11.92	12.08	12.08	12.08	12.08	12.87	12.87	12.87	12.87
		S/T	0.76	0.86	0.99	1.00	0.59	0.69	0.80	0.89	0.51	0.61	0.71	0.82	0.33	0.43	0.52	0.61
		PI	2.71	2.71	2.71	2.71	2.71	2.71	2.71	2.71	2.70	2.70	2.70	2.70	2.71	2.71	2.71	2.71
	-5	TC	11.14	11.26	11.38	11.50	11.76	11.76	11.76	11.88	12.04	12.04	12.04	12.04	12.84	12.84	12.84	12.84
		S/T	0.76	0.87	0.99	1.00	0.59	0.69	0.80	0.90	0.52	0.61	0.71	0.82	0.33	0.43	0.53	0.61
		PI	2.70	2.70	2.70	2.70	2.70	2.70	2.70	2.70	2.70	2.70	2.70	2.70	2.71	2.71	2.71	2.71
	0	TC	11.09	11.21	11.32	11.44	11.71	11.71	11.71	11.83	12.01	12.01	12.01	12.01	12.83	12.83	12.83	12.83
		S/T	0.76	0.87	1.00	1.00	0.60	0.70	0.80	0.90	0.52	0.62	0.72	0.82	0.33	0.43	0.53	0.62
		PI	2.71	2.71	2.71	2.71	2.71	2.71	2.71	2.71	2.71	2.71	2.71	2.71	2.72	2.72	2.72	2.72
	5	TC	11.03	11.15	11.27	11.38	11.67	11.67	11.67	11.79	11.97	11.97	11.97	11.97	12.82	12.82	12.82	12.82
		S/T	0.77	0.88	1.00	1.00	0.60	0.70	0.81	0.91	0.52	0.62	0.72	0.83	0.33	0.43	0.53	0.62
		PI	2.74	2.74	2.74	2.74	2.74	2.74	2.74	2.74	2.73	2.73	2.73	2.73	2.74	2.74	2.74	2.74
	10	TC	10.96	11.08	11.20	11.32	11.61	11.61	11.61	11.73	11.92	11.92	11.92	11.92	12.78	12.78	12.78	12.78
		S/T	0.77	0.88	1.00	1.00	0.60	0.70	0.81	0.91	0.52	0.62	0.72	0.83	0.34	0.44	0.53	0.62
		PI	2.78	2.78	2.78	2.78	2.78	2.78	2.78	2.78	2.77	2.77	2.77	2.77	2.78	2.78	2.78	2.78
	15	TC	10.87	10.99	11.11	11.22	11.54	11.54	11.54	11.65	11.85	11.85	11.85	11.85	12.73	12.73	12.73	12.73
		S/T	0.78	0.89	0.99	1.00	0.61	0.71	0.82	0.92	0.53	0.63	0.73	0.84	0.34	0.44	0.54	0.63
		PI	2.85	2.85	2.85	2.85	2.84	2.84	2.84	2.84	2.84	2.84	2.84	2.84	2.84	2.84	2.84	2.84
	20	TC	10.75	10.87	10.98	11.10	11.41	11.41	11.41	11.53	11.73	11.73	11.73	11.73	12.62	12.62	12.62	12.62
		S/T	0.78	0.89	0.99	1.00	0.61	0.71	0.82	0.92	0.53	0.63	0.73	0.84	0.34	0.44	0.54	0.63
		PI	2.95	2.95	2.95	2.95	2.94	2.94	2.94	2.94	2.93	2.93	2.93	2.93	2.92	2.92	2.92	2.92
	25	TC	10.26	10.38	10.49	10.61	10.90	10.90	10.90	11.01	11.21	11.21	11.21	11.21	12.07	12.07	12.07	12.07
		S/T	0.79	0.91	1.00	1.00	0.61	0.73	0.84	0.94	0.53	0.64	0.75	0.86	0.34	0.44	0.54	0.64
		PI	3.25	3.25	3.25	3.25	3.25	3.25	3.25	3.25	3.25	3.25	3.25	3.25	3.25	3.25	3.25	3.25
	30	TC	9.77	9.86	9.95	10.03	10.41	10.41	10.41	10.52	10.72	10.72	10.72	10.72	11.53	11.53	11.53	11.53
		S/T	0.81	0.93	1.00	1.00	0.62	0.74	0.85	0.97	0.54	0.65	0.76	0.87	0.34	0.44	0.55	0.65
		PI	3.56	3.56	3.56	3.56	3.57	3.57	3.57	3.57	3.57	3.57	3.57	3.57	3.59	3.59	3.59	3.59
	35	TC	9.29	9.37	9.46	9.54	9.89	9.89	9.89	9.98	10.18	10.18	10.35	10.46	10.98	10.98	10.98	10.98
		S/T	0.83	0.95	1.00	1.00	0.63	0.75	0.88	0.99	0.54	0.66	0.77	0.89	0.34	0.45	0.56	0.67
		PI	3.89	3.89	3.89	3.89	3.91	3.91	3.91	3.91	3.91	3.91	3.92	3.91	3.91	3.91	3.91	3.91
	40	TC	8.67	8.76	8.84	8.93	9.24	9.24	9.28	9.37	9.52	9.52	9.61	9.71	10.29	10.29	10.29	10.29
		S/T	0.86	1.00	1.00	1.00	0.65	0.78	0.91	1.00	0.55	0.68	0.81	0.94	0.33	0.45	0.57	0.69
		PI	4.29	4.29	4.29	4.29	4.32	4.32	4.32	4.32	4.32	4.32	4.33	4.32	4.34	4.34	4.34	4.34
	46	TC	8.03	8.12	8.20	8.29	8.58	8.58	8.66	8.75	8.83	8.83	8.83	8.92	9.57	9.57	9.57	9.57
		S/T	0.88	1.00	1.00	1.00	0.66	0.80	0.93	1.00	0.56	0.69	0.83	0.96	0.33	0.45	0.58	0.70
		PI	4.77	4.77	4.77	4.77	4.80	4.80	4.80	4.80	4.81	4.81	4.81	4.81	4.85	4.85	4.85	4.85
	50	TC	7.52	7.61	7.69	7.78	8.06	8.06	8.15	8.23	8.32	8.32	8.32	8.40	9.03	9.03	9.03	9.03
		S/T	0.90	1.00	1.00	1.00	0.67	0.82	0.96	1.00	0.57	0.71	0.85	0.99	0.32	0.46	0.59	0.91
		PI	5.17	5.17	5.17	5.17	5.19	5.19	5.19	5.19	5.21	5.21	5.21	5.21	5.25	5.25	5.25	5.25

2100	-15	TC	11.49	11.61	11.73	11.85	12.08	12.08	12.08	12.20	12.38	12.38	12.38	12.50	13.15	13.15	13.15	13.15
		S/T	0.79	0.92	1.00	1.00	0.61	0.72	0.84	0.98	0.52	0.64	0.75	0.86	0.33	0.43	0.53	0.64
		PI	2.77	2.77	2.77	2.77	2.77	2.77	2.77	2.77	2.76	2.76	2.76	2.76	2.76	2.76	2.76	2.76
	-10	TC	11.42	11.54	11.66	11.78	12.01	12.01	12.01	12.13	12.32	12.32	12.32	12.44	13.11	13.11	13.11	13.11
		S/T	0.80	0.92	1.00	1.00	0.61	0.73	0.84	0.98	0.52	0.64	0.76	0.86	0.33	0.44	0.53	0.64
		PI	2.76	2.76	2.76	2.76	2.76	2.76	2.76	2.76	2.76	2.76	2.76	2.76	2.76	2.76	2.76	2.76
	-5	TC	11.35	11.47	11.59	11.71	11.97	11.97	11.97	12.08	12.28	12.28	12.28	12.39	13.07	13.07	13.07	13.07
		S/T	0.80	0.93	1.00	1.00	0.61	0.73	0.85	0.99	0.53	0.64	0.76	0.87	0.33	0.44	0.54	0.64
		PI	2.76	2.76	2.76	2.76	2.76	2.76	2.76	2.76	2.76	2.76	2.76	2.76	2.77	2.77	2.77	2.77
	0	TC	11.29	11.41	11.53	11.65	11.92	11.92	11.92	12.04	12.24	12.24	12.24	12.36	13.06	13.06	13.06	13.06
		S/T	0.80	0.93	1.00	1.00	0.62	0.74	0.85	0.99	0.53	0.65	0.76	0.87	0.33	0.44	0.54	0.65
		PI	2.77	2.77	2.77	2.77	2.77	2.77	2.77	2.77	2.77	2.77	2.77	2.77	2.78	2.78	2.78	2.78
	5	TC	11.24	11.36	11.47	11.59	11.87	11.87	11.87	11.99	12.20	12.20	12.20	12.32	13.05	13.05	13.05	13.05
		S/T	0.81	0.94	1.00	1.00	0.62	0.74	0.86	1.00	0.53	0.65	0.77	0.88	0.33	0.44	0.54	0.65
		PI	2.79	2.79	2.79	2.79	2.79	2.79	2.79	2.79	2.79	2.79	2.79	2.79	2.80	2.80	2.80	2.80
	10	TC	11.17	11.29	11.40	11.52	11.82	11.82	11.82	11.94	12.15	12.15	12.15	12.27	13.02	13.02	13.02	13.02
		S/T	0.81	0.94	1.00	1.00	0.62	0.74	0.86	1.00	0.53	0.65	0.77	0.88	0.34	0.45	0.54	0.65
		PI	2.84	2.84	2.84	2.84	2.83	2.83	2.83	2.83	2.83	2.83	2.83	2.83	2.83	2.83	2.83	2.83
	15	TC	11.08	11.19	11.31	11.43	11.74	11.74	11.74	11.86	12.08	12.08	12.08	12.19	12.96	12.96	12.96	12.96
		S/T	0.82	0.95	1.00	1.00	0.63	0.75	0.87	0.99	0.54	0.66	0.78	0.89	0.34	0.45	0.55	0.66
		PI	2.91	2.91	2.91	2.91	2.90	2.90	2.90	2.90	2.89	2.89	2.89	2.89	2.89	2.89	2.89	2.89
	20	TC	10.95	11.07	11.18	11.30	11.61	11.61	11.61	11.73	11.96	11.96	11.96	12.07	12.85	12.85	12.85	12.85
		S/T	0.82	0.95	1.00	1.00	0.63	0.75	0.87	0.99	0.54	0.66	0.78	0.89	0.34	0.45	0.55	0.66
		PI	3.01	3.01	3.01	3.01	3.00	3.00	3.00	3.00	2.99	2.99	2.99	2.99	2.98	2.98	2.98	2.98
	25	TC	10.46	10.58	10.69	10.81	11.10	11.10	11.21	11.33	11.44	11.44	11.44	11.56	12.30	12.30	12.30	12.30
		S/T	0.84	0.97	1.00	1.00	0.64	0.77	0.89	1.00	0.55	0.67	0.79	0.91	0.33	0.45	0.56	0.68
		PI	3.31	3.31	3.31	3.31	3.31	3.31	3.31	3.31	3.31	3.31	3.31	3.31	3.31	3.31	3.31	3.31
	30	TC	9.98	10.06	10.18	10.29	10.61	10.61	10.72	10.84	10.92	10.92	10.92	11.04	11.76	11.76	11.76	11.76
		S/T	0.86	0.99	1.00	1.00	0.65	0.78	0.91	1.00	0.55	0.68	0.81	0.93	0.33	0.45	0.57	0.69
		PI	3.63	3.63	3.63	3.63	3.64	3.64	3.64	3.64	3.65	3.65	3.65	3.65	3.66	3.66	3.66	3.66
	35	TC	9.46	9.54	9.63	9.72	10.06	10.06	10.18	10.29	10.38	10.38	**10.55**	10.67	11.21	11.21	11.21	11.21
		S/T	0.88	1.00	1.00	1.00	0.66	0.80	0.93	1.00	0.56	0.69	**0.82**	0.95	0.33	0.45	0.58	0.70
		PI	3.97	3.97	3.97	3.97	3.99	3.99	3.99	3.99	3.99	3.99	**4.00**	3.99	4.02	4.02	4.02	4.02
	40	TC	8.83	8.91	9.00	9.09	9.40	9.40	9.50	9.60	9.70	9.70	9.83	9.93	10.50	10.50	10.50	10.50
		S/T	0.92	1.00	1.00	1.00	0.68	0.83	0.98	1.00	0.57	0.72	0.87	1.00	0.32	0.46	0.60	0.90
		PI	4.38	4.38	4.38	4.38	4.40	4.40	4.40	4.40	4.41	4.41	4.41	4.41	4.44	4.44	4.44	4.44
	46	TC	8.18	8.26	8.35	8.43	8.72	8.72	8.80	8.89	9.00	9.00	9.09	9.17	9.77	9.77	9.77	9.77
		S/T	0.94	1.00	1.00	1.00	0.69	0.85	1.00	1.00	0.58	0.73	0.88	1.00	0.32	0.46	0.61	0.92
		PI	4.87	4.87	4.87	4.87	4.89	4.89	4.89	4.89	4.91	4.91	4.91	4.91	4.95	4.95	4.95	4.95
	50	TC	7.66	7.75	7.83	7.92	8.20	8.20	8.29	8.38	8.49	8.49	8.58	8.66	9.20	9.20	9.20	9.20
		S/T	0.97	1.00	1.00	1.00	0.71	0.88	1.00	1.00	0.59	0.75	0.91	1.00	0.32	0.47	0.62	0.97
		PI	5.27	5.27	5.27	5.27	5.30	5.30	5.30	5.30	5.31	5.31	5.31	5.31	5.35	5.35	5.35	5.35

TC:Total Cooling Capacity (kW)

S/T:Sensible Cooling Capacity Ratio

PI:Power Input(kW)

Note: The table shows the case where the operation frequency of a compressor is fixed.

42k																		
INDOOR AIRFLOW (CMH)	OUTDOOR DB(℃)	ID WB (℃)	16.0				18.0				19.0				22.0			
		ID DB (℃)	23.0	25.0	27.0	29.0	23.0	25.0	27.0	29.0	23.0	25.0	27.0	29.0	23.0	25.0	27.0	29.0
1680	-15	TC	12.59	12.60	12.72	12.84	13.24	13.51	13.51	13.66	13.57	13.57	13.57	13.57	14.41	14.41	14.41	14.41
		S/T	0.71	0.80	0.89	0.97	0.57	0.65	0.73	0.82	0.50	0.58	0.67	0.75	0.35	0.42	0.50	0.58
		PI	2.80	2.80	2.80	2.80	2.80	2.80	2.80	2.80	2.79	2.79	2.79	2.79	2.79	2.79	2.79	2.79
	-10	TC	12.51	12.52	12.64	12.76	13.16	13.44	13.44	13.59	13.50	13.50	13.50	13.50	14.36	14.36	14.36	14.36
		S/T	0.72	0.81	0.89	0.97	0.57	0.66	0.74	0.82	0.50	0.58	0.67	0.76	0.35	0.43	0.50	0.58
		PI	2.79	2.79	2.79	2.79	2.79	2.79	2.79	2.79	2.78	2.78	2.78	2.78	2.79	2.79	2.79	2.79
	-5	TC	12.44	12.45	12.57	12.69	13.11	13.39	13.39	13.53	13.45	13.45	13.45	13.45	14.32	14.32	14.32	14.32
		S/T	0.72	0.81	0.90	0.98	0.58	0.66	0.74	0.83	0.51	0.59	0.67	0.76	0.35	0.43	0.51	0.59
		PI	2.79	2.78	2.78	2.79	2.79	2.79	2.79	2.79	2.78	2.78	2.78	2.78	2.80	2.80	2.80	2.80
	0	TC	12.38	12.39	12.50	12.62	13.06	13.34	13.34	13.48	13.41	13.41	13.41	13.41	14.31	14.31	14.31	14.31
		S/T	0.73	0.81	0.90	0.98	0.58	0.66	0.74	0.83	0.51	0.59	0.68	0.76	0.35	0.43	0.51	0.59
		PI	2.80	2.80	2.80	2.80	2.80	2.80	2.80	2.80	2.80	2.80	2.80	2.80	2.81	2.81	2.81	2.81
	5	TC	12.31	12.32	12.44	12.56	13.02	13.28	13.28	13.43	13.37	13.37	13.37	13.37	14.30	14.30	14.30	14.30
		S/T	0.73	0.82	0.91	0.99	0.58	0.66	0.75	0.84	0.51	0.59	0.68	0.77	0.35	0.43	0.51	0.59
		PI	2.82	2.82	2.82	2.82	2.82	2.82	2.82	2.82	2.82	2.82	2.82	2.82	2.83	2.83	2.83	2.83
	10	TC	12.24	12.25	12.37	12.48	12.95	13.22	13.22	13.37	13.31	13.31	13.31	13.31	14.26	14.26	14.26	14.26
		S/T	0.73	0.82	0.91	0.99	0.58	0.67	0.75	0.84	0.51	0.59	0.68	0.77	0.36	0.44	0.51	0.59
		PI	2.87	2.87	2.87	2.87	2.86	2.86	2.86	2.86	2.86	2.86	2.86	2.86	2.86	2.86	2.86	2.86
	15	TC	12.14	12.15	12.27	12.38	12.87	13.13	13.13	13.28	13.23	13.23	13.23	13.23	14.20	14.20	14.20	14.20
		S/T	0.74	0.83	0.92	1.00	0.59	0.67	0.76	0.85	0.52	0.60	0.69	0.78	0.36	0.44	0.52	0.60
		PI	2.94	2.94	2.94	2.94	2.93	2.93	2.93	2.93	2.92	2.92	2.92	2.92	2.92	2.92	2.92	2.92
	20	TC	12.00	12.01	12.13	12.24	12.73	12.73	12.73	12.73	13.10	13.10	13.10	13.10	14.08	14.08	14.08	14.08
		S/T	0.74	0.83	0.92	1.00	0.59	0.68	0.76	0.85	0.52	0.60	0.69	0.78	0.36	0.44	0.52	0.60
		PI	3.04	3.04	3.04	3.04	3.03	3.03	3.03	3.03	3.02	3.02	3.02	3.02	3.01	3.01	3.01	3.01
	25	TC	11.44	11.44	11.55	11.67	12.16	12.16	12.16	12.16	12.53	12.53	12.53	12.53	13.48	13.48	13.48	13.48
		S/T	0.75	0.85	0.94	1.00	0.59	0.68	0.78	0.87	0.52	0.61	0.70	0.79	0.35	0.44	0.52	0.60
		PI	3.35	3.35	3.35	3.35	3.35	3.35	3.35	3.35	3.35	3.35	3.35	3.35	3.35	3.35	3.35	3.35
	30	TC	10.92	10.92	11.03	11.15	11.61	11.61	11.61	11.72	11.95	11.95	11.95	11.95	12.87	12.87	12.87	12.87
		S/T	0.76	0.86	0.96	1.00	0.60	0.69	0.79	0.88	0.52	0.62	0.71	0.80	0.35	0.44	0.52	0.61
		PI	3.67	3.67	3.67	3.67	3.68	3.68	3.68	3.68	3.68	3.68	3.68	3.68	3.70	3.70	3.70	3.70
	35	TC	10.37	10.37	10.49	10.60	11.03	11.03	11.03	11.15	11.38	11.38	11.55	11.38	12.27	12.27	12.27	12.27
		S/T	0.77	0.88	0.98	1.00	0.60	0.71	0.81	0.91	0.53	0.62	0.72	0.82	0.35	0.44	0.53	0.62
		PI	4.01	4.01	4.01	4.01	4.03	4.03	4.03	4.03	4.03	4.03	4.04	4.03	4.06	4.06	4.06	4.06
	40	TC	9.68	9.71	9.82	9.92	10.32	10.32	10.32	10.42	10.65	10.65	10.74	10.65	11.49	11.49	11.49	11.49
		S/T	0.80	0.91	1.00	1.00	0.62	0.73	0.84	0.95	0.53	0.64	0.75	0.86	0.34	0.44	0.54	0.64
		PI	4.43	4.43	4.43	4.43	4.44	4.44	4.44	4.44	4.45	4.45	4.46	4.45	4.49	4.49	4.49	4.49
	46	TC	8.95	9.03	9.12	9.20	9.57	9.57	9.57	9.66	9.89	9.89	9.89	9.89	10.68	10.68	10.68	10.68
		S/T	0.81	0.93	1.00	1.00	0.62	0.74	0.86	0.97	0.54	0.65	0.76	0.88	0.34	0.44	0.55	0.65
		PI	4.92	4.92	4.92	4.92	4.94	4.94	4.94	4.94	4.96	4.96	4.96	4.96	5.00	5.00	5.00	5.00
	50	TC	8.40	8.49	8.57	8.66	8.97	8.97	8.97	9.06	9.29	9.29	9.29	9.37	10.06	10.06	10.06	10.06
		S/T	0.83	0.96	1.00	1.00	0.63	0.76	0.88	1.00	0.54	0.66	0.78	0.90	0.33	0.45	0.56	0.67
		PI	5.33	5.33	5.33	5.33	5.35	5.35	5.35	5.35	5.36	5.36	5.36	5.36	5.41	5.41	5.41	5.41
2040	-15	TC	12.84	12.96	13.08	13.20	13.51	13.51	13.51	13.66	13.84	13.84	13.84	13.84	14.71	14.71	14.71	14.71
		S/T	0.75	0.86	0.98	1.00	0.59	0.69	0.79	0.89	0.51	0.61	0.70	0.81	0.33	0.42	0.51	0.61
		PI	2.86	2.86	2.86	2.86	2.85	2.85	2.85	2.85	2.85	2.85	2.85	2.85	2.84	2.84	2.84	2.84
	-10	TC	12.77	12.89	13.01	13.13	13.44	13.44	13.44	13.59	13.77	13.77	13.77	13.77	14.66	14.66	14.66	14.66
		S/T	0.76	0.86	0.99	1.00	0.59	0.69	0.80	0.89	0.51	0.61	0.71	0.82	0.33	0.43	0.51	0.61
		PI	2.84	2.84	2.84	2.84	2.84	2.84	2.84	2.84	2.84	2.84	2.84	2.84	2.85	2.85	2.85	2.85
	-5	TC	12.69	12.81	12.93	13.05	13.39	13.39	13.39	13.53	13.72	13.72	13.72	13.72	14.62	14.62	14.62	14.62
		S/T	0.76	0.87	0.99	1.00	0.59	0.69	0.80	0.90	0.52	0.61	0.71	0.82	0.33	0.43	0.52	0.61
		PI	2.84	2.84	2.84	2.84	2.84	2.84	2.84	2.84	2.84	2.84	2.84	2.84	2.85	2.85	2.85	2.85
	0	TC	12.63	12.75	12.86	12.98	13.34	13.34	13.34	13.48	13.68	13.68	13.68	13.68	14.61	14.61	14.61	14.61
		S/T	0.76	0.87	1.00	1.00	0.60	0.70	0.80	0.90	0.52	0.62	0.72	0.82	0.33	0.43	0.52	0.62
		PI	2.85	2.85	2.85	2.85	2.85	2.85	2.85	2.85	2.85	2.85	2.85	2.85	2.86	2.86	2.86	2.86
	5	TC	12.56	12.68	12.80	12.92	13.28	13.28	13.28	13.43	13.64	13.64	13.64	13.64	14.60	14.60	14.60	14.60
		S/T	0.77	0.88	1.00	1.00	0.60	0.70	0.81	0.91	0.52	0.62	0.72	0.83	0.33	0.43	0.52	0.62
		PI	2.88	2.88	2.88	2.88	2.88	2.88	2.88	2.88	2.87	2.87	2.87	2.87	2.88	2.88	2.88	2.88
	10	TC	12.49	12.60	12.72	12.84	13.22	13.22	13.22	13.37	13.58	13.58	13.58	13.58	14.56	14.56	14.56	14.56
		S/T	0.77	0.88	1.00	1.00	0.60	0.70	0.81	0.91	0.52	0.62	0.72	0.83	0.34	0.44	0.52	0.62
		PI	2.93	2.93	2.93	2.93	2.92	2.92	2.92	2.92	2.92	2.92	2.92	2.92	2.92	2.92	2.92	2.92
	15	TC	12.39	12.50	12.62	12.73	13.13	13.13	13.13	13.28	13.50	13.50	13.50	13.50	14.50	14.50	14.50	14.50
		S/T	0.78	0.89	0.99	1.00	0.61	0.71	0.82	0.92	0.53	0.63	0.73	0.84	0.34	0.44	0.53	0.63
		PI	3.00	3.00	3.00	3.00	2.99	2.99	2.99	2.99	2.98	2.98	2.98	2.98	2.98	2.98	2.98	2.98
	20	TC	12.25	12.36	12.48	12.59	12.99	12.99	12.99	13.14	13.37	13.37	13.37	13.37	14.37	14.37	14.37	14.37
		S/T	0.78	0.89	0.99	1.00	0.61	0.71	0.82	0.92	0.53	0.63	0.73	0.84	0.34	0.44	0.53	0.63
		PI	3.10	3.10	3.10	3.10	3.09	3.09	3.09	3.09	3.08	3.08	3.08	3.08	3.07	3.07	3.07	3.07
	25	TC	11.67	11.79	11.90	12.02	12.42	12.42	12.42	12.53	12.79	12.79	12.79	12.79	13.74	13.74	13.74	13.74
		S/T	0.79	0.91	1.00	1.00	0.61	0.72	0.83	0.94	0.53	0.64	0.75	0.85	0.34	0.44	0.54	0.64
		PI	3.41	3.41	3.41	3.41	3.41	3.41	3.41	3.41	3.41	3.41	3.41	3.41	3.41	3.41	3.41	3.41
	30	TC	11.13	11.24	11.36	11.47	11.84	11.84	11.84	11.96	12.19	12.19	12.19	12.19	13.14	13.14	13.14	13.14
		S/T	0.81	0.93	1.00	1.00	0.62	0.74	0.85	0.96	0.54	0.65	0.76	0.87	0.34	0.44	0.55	0.65
		PI	3.74	3.74	3.74	3.74	3.75	3.75	3.75	3.75	3.76	3.76	3.76	3.76	3.77	3.77	3.77	3.77
	35	TC	10.58	10.69	10.81	10.92	11.27	11.27	11.27	11.38	11.61	11.61	11.79	11.90	12.53	12.53	12.53	12.53
		S/T	0.82	0.95	1.00	1.00	0.63	0.75	0.87	0.99	0.54	0.66	0.77	0.88	0.34	0.44	0.55	0.66
		PI	4.09	4.09	4.09	4.09	4.11	4.11	4.11	4.11	4.11	4.11	4.12	4.11	4.11	4.11	4.11	4.11
	40	TC	9.86	9.96	10.06	10.16	10.50	10.50	10.54	10.64	10.83	10.83	10.92	11.03	11.71	11.71	11.71	11.71
		S/T	0.86	1.00	1.00	1.00	0.65	0.78	0.91	1.00	0.55	0.68	0.81	0.93	0.33	0.45	0.57	0.69
		PI	4.52	4.52	4.52	4.52	4.54	4.54	4.54	4.54	4.55	4.55	4.56	4.55	4.57	4.57	4.57	4.57
	46	TC	9.13	9.21	9.30	9.38	9.72	9.72	9.81	9.89	10.04	10.04	10.04	10.15	10.89	10.89	10.89	10.89
		S/T	0.87	1.00	1.00	1.00	0.66	0.80	0.93	1.00	0.56	0.69	0.83	0.96	0.33	0.45	0.58	0.70
		PI	5.03	5.03	5.03	5.03	5.05	5.05	5.05	5.05	5.07	5.07	5.07	5.07	5.11	5.11	5.11	5.11
	50	TC	8.56	8.64	8.73	8.81	9.16	9.16	9.24	9.33	9.44	9.44	9.44	9.52	10.24	10.24	10.24	10.24
		S/T	0.90	1.00	1.00	1.00	0.67	0.82	0.96	1.00	0.56	0.71	0.85	0.99	0.32	0.46	0.59	0.91
		PI	5.45	5.45	5.45	5.45	5.47	5.47	5.47	5.47	5.48	5.48	5.48	5.48	5.53	5.53	5.53	5.53

2400	-15	TC	13.08	13.20	13.33	13.45	13.78	13.78	13.78	13.93	14.11	14.11	14.11	14.26	14.97	14.97	14.97	14.97
		S/T	0.79	0.92	1.00	1.00	0.61	0.72	0.84	0.98	0.52	0.64	0.75	0.86	0.33	0.43	0.54	0.65
		PI	2.91	2.91	2.91	2.91	2.91	2.91	2.91	2.91	2.90	2.90	2.90	2.90	2.90	2.90	2.90	2.90
	-10	TC	13.01	13.13	13.25	13.37	13.70	13.70	13.70	13.85	14.04	14.04	14.04	14.19	14.92	14.92	14.92	14.92
		S/T	0.80	0.92	1.00	1.00	0.61	0.73	0.84	0.98	0.52	0.64	0.76	0.86	0.33	0.44	0.54	0.65
		PI	2.90	2.90	2.90	2.90	2.90	2.90	2.90	2.90	2.89	2.89	2.89	2.89	2.90	2.90	2.90	2.90
	-5	TC	12.93	13.05	13.17	13.29	13.65	13.65	13.65	13.80	13.99	13.99	13.99	14.13	14.89	14.89	14.89	14.89
		S/T	0.80	0.93	1.00	1.00	0.61	0.73	0.85	0.99	0.53	0.64	0.76	0.87	0.33	0.44	0.55	0.65
		PI	2.89	2.89	2.89	2.89	2.89	2.89	2.89	2.89	2.89	2.89	2.89	2.89	2.91	2.91	2.91	2.91
	0	TC	12.86	12.98	13.10	13.22	13.60	13.60	13.60	13.75	13.95	13.95	13.95	14.10	14.87	14.87	14.87	14.87
		S/T	0.80	0.93	1.00	1.00	0.62	0.74	0.85	0.99	0.53	0.65	0.76	0.87	0.33	0.44	0.55	0.66
		PI	2.90	2.90	2.90	2.90	2.91	2.91	2.91	2.91	2.91	2.91	2.91	2.91	2.92	2.92	2.92	2.92
	5	TC	12.80	12.92	13.04	13.15	13.55	13.55	13.55	13.70	13.90	13.90	13.90	14.05	14.86	14.86	14.86	14.86
		S/T	0.81	0.94	1.00	1.00	0.62	0.74	0.86	1.00	0.53	0.65	0.77	0.88	0.33	0.44	0.55	0.66
		PI	2.93	2.93	2.93	2.93	2.93	2.93	2.93	2.93	2.93	2.93	2.93	2.93	2.94	2.94	2.94	2.94
	10	TC	12.72	12.84	12.96	13.07	13.48	13.48	13.48	13.63	13.85	13.85	13.85	13.99	14.82	14.82	14.82	14.82
		S/T	0.81	0.94	1.00	1.00	0.62	0.74	0.86	1.00	0.53	0.65	0.77	0.88	0.34	0.45	0.55	0.66
		PI	2.98	2.98	2.98	2.98	2.98	2.98	2.98	2.98	2.97	2.97	2.97	2.97	2.98	2.98	2.98	2.98
	15	TC	12.62	12.73	12.85	12.97	13.39	13.39	13.39	13.54	13.76	13.76	13.76	13.91	14.76	14.76	14.76	14.76
		S/T	0.82	0.95	1.00	1.00	0.63	0.75	0.87	0.99	0.54	0.66	0.78	0.89	0.34	0.45	0.56	0.67
		PI	3.05	3.05	3.05	3.05	3.05	3.05	3.05	3.05	3.04	3.04	3.04	3.04	3.04	3.04	3.04	3.04
	20	TC	12.48	12.59	12.71	12.82	13.25	13.25	13.25	13.40	13.63	13.63	13.63	13.77	14.63	14.63	14.63	14.63
		S/T	0.82	0.95	1.00	1.00	0.63	0.75	0.87	0.99	0.54	0.66	0.78	0.89	0.34	0.45	0.56	0.67
		PI	3.16	3.16	3.16	3.16	3.15	3.15	3.15	3.15	3.14	3.14	3.14	3.14	3.13	3.13	3.13	3.13
	25	TC	11.90	12.02	12.13	12.25	12.65	12.65	12.76	12.88	13.02	13.02	13.02	13.17	14.03	14.03	14.03	14.03
		S/T	0.84	0.97	1.00	1.00	0.64	0.77	0.89	1.00	0.55	0.67	0.79	0.91	0.33	0.45	0.56	0.68
		PI	3.48	3.48	3.48	3.48	3.48	3.48	3.48	3.48	3.48	3.48	3.48	3.48	3.48	3.48	3.48	3.48
	30	TC	11.36	11.47	11.59	11.70	12.07	12.07	12.19	12.30	12.45	12.45	12.45	12.56	13.40	13.40	13.40	13.40
		S/T	0.86	0.99	1.00	1.00	0.65	0.78	0.91	1.00	0.55	0.68	0.81	0.94	0.33	0.45	0.57	0.69
		PI	3.82	3.82	3.82	3.82	3.82	3.82	3.82	3.82	3.83	3.83	3.83	3.83	3.85	3.85	3.85	3.85
	35	TC	10.78	10.90	11.01	11.13	11.47	11.47	11.59	11.70	11.84	11.84	**12.02**	12.13	12.76	12.76	12.76	12.76
		S/T	0.88	1.00	1.00	1.00	0.66	0.80	0.93	1.00	0.56	0.69	**0.82**	0.95	0.33	0.45	0.58	0.71
		PI	4.17	4.17	4.17	4.17	4.19	4.19	4.19	4.19	4.19	4.19	**4.20**	4.19	4.22	4.22	4.22	4.22
	40	TC	10.04	10.14	10.24	10.34	10.70	10.70	10.80	10.91	11.04	11.04	11.19	11.30	11.93	11.93	11.93	11.93
		S/T	0.92	1.00	1.00	1.00	0.68	0.83	0.98	1.00	0.57	0.72	0.87	1.00	0.32	0.46	0.60	0.90
		PI	4.61	4.61	4.61	4.61	4.63	4.63	4.63	4.63	4.63	4.63	4.64	4.63	4.67	4.67	4.67	4.67
	46	TC	9.30	9.38	9.47	9.55	9.92	9.92	10.01	10.12	10.24	10.24	10.35	10.46	11.09	11.09	11.09	11.09
		S/T	0.94	1.00	1.00	1.00	0.69	0.85	1.00	1.00	0.58	0.73	0.88	1.00	0.32	0.46	0.61	0.92
		PI	5.13	5.13	5.13	5.13	5.15	5.15	5.15	5.15	5.16	5.16	5.16	5.16	5.21	5.21	5.21	5.21
	50	TC	8.73	8.81	8.90	8.98	9.33	9.33	9.41	9.50	9.64	9.64	9.72	9.81	10.46	10.46	10.46	10.46
		S/T	0.97	1.00	1.00	1.00	0.71	0.88	1.00	1.00	0.59	0.75	0.91	1.00	0.32	0.47	0.62	0.97
		PI	5.55	5.55	5.55	5.55	5.57	5.57	5.57	5.57	5.59	5.59	5.59	5.59	5.63	5.63	5.63	5.63

TC:Total Cooling Capacity (kW)

S/T:Sensible Cooling Capacity Ratio

PI:Power Input(kW)

Note: The table shows the case where the operation frequency of a compressor is fixed.

48k																			
INDOOR AIRFLOW (CMH)	OUTDOOR DB(℃)	ID WB (℃)	16.0				18.0				19.0				22.0				
		ID DB (℃)	23.0	25.0	27.0	29.0	23.0	25.0	27.0	29.0	23.0	25.0	27.0	29.0	23.0	25.0	27.0	29.0	
1680	-15	TC	14.70	14.69	14.69	14.84	15.46	15.79	15.79	15.79	15.84	15.84	15.84	15.84	16.83	16.83	16.83	16.83	
		S/T	0.69	0.76	0.84	0.92	0.55	0.63	0.70	0.77	0.49	0.57	0.64	0.70	0.36	0.42	0.49	0.55	
		PI	3.19	3.19	3.19	3.19	3.18	3.18	3.18	3.18	3.18	3.18	3.18	3.18	3.17	3.17	3.17	3.17	
	-10	TC	14.61	14.60	14.60	14.75	15.37	15.71	15.71	15.71	15.76	15.76	15.76	15.76	16.77	16.77	16.77	16.77	
		S/T	0.69	0.77	0.84	0.92	0.55	0.63	0.71	0.78	0.49	0.57	0.64	0.71	0.36	0.43	0.49	0.55	
		PI	3.18	3.18	3.18	3.18	3.17	3.17	3.17	3.17	3.18	3.18	3.18	3.18	3.18	3.18	3.18	3.18	
	-5	TC	14.52	14.51	14.51	14.66	15.31	15.65	15.65	15.65	15.70	15.70	15.70	15.70	16.73	16.73	16.73	16.73	
		S/T	0.69	0.77	0.85	0.93	0.56	0.63	0.71	0.78	0.50	0.58	0.64	0.71	0.36	0.43	0.50	0.56	
		PI	3.17	3.17	3.17	3.17	3.17	3.17	3.17	3.17	3.18	3.18	3.18	3.18	3.18	3.18	3.18	3.18	
	0	TC	14.45	14.44	14.44	14.59	15.26	15.59	15.59	15.59	15.66	15.66	15.66	15.66	16.71	16.71	16.71	16.71	
		S/T	0.70	0.77	0.85	0.93	0.56	0.64	0.72	0.78	0.50	0.58	0.65	0.72	0.36	0.43	0.50	0.56	
		PI	3.18	3.19	3.19	3.18	3.18	3.18	3.18	3.18	3.19	3.19	3.19	3.19	3.19	3.19	3.19	3.19	
	5	TC	14.38	14.37	14.37	14.51	15.20	15.53	15.53	15.53	15.61	15.61	15.61	15.61	16.70	16.70	16.70	16.70	
		S/T	0.70	0.78	0.86	0.94	0.56	0.64	0.72	0.79	0.50	0.58	0.65	0.72	0.36	0.43	0.50	0.56	
		PI	3.21	3.22	3.22	3.21	3.21	3.21	3.21	3.21	3.21	3.21	3.21	3.21	3.22	3.22	3.22	3.22	
	10	TC	14.29	14.28	14.28	14.43	15.13	15.45	15.45	15.45	15.54	15.54	15.54	15.54	16.66	16.66	16.66	16.66	
		S/T	0.70	0.78	0.86	0.94	0.56	0.64	0.72	0.79	0.50	0.58	0.65	0.72	0.37	0.44	0.50	0.56	
		PI	3.27	3.27	3.27	3.27	3.26	3.26	3.26	3.26	3.26	3.26	3.26	3.26	3.26	3.26	3.26	3.26	
	15	TC	14.18	14.16	14.16	14.31	15.02	15.35	15.35	15.35	15.45	15.45	15.45	15.45	16.59	16.59	16.59	16.59	
		S/T	0.71	0.79	0.87	0.95	0.57	0.65	0.73	0.80	0.51	0.59	0.66	0.73	0.37	0.44	0.51	0.57	
		PI	3.35	3.35	3.35	3.35	3.33	3.33	3.33	3.33	3.34	3.34	3.34	3.34	3.33	3.33	3.33	3.33	
	20	TC	14.02	14.00	14.00	14.15	14.87	14.87	14.87	14.87	15.30	15.30	15.30	15.30	16.44	16.44	16.44	16.44	
		S/T	0.71	0.79	0.87	0.95	0.57	0.65	0.73	0.80	0.51	0.59	0.66	0.73	0.37	0.44	0.51	0.57	
		PI	3.46	3.47	3.47	3.46	3.45	3.45	3.45	3.45	3.45	3.45	3.45	3.45	3.43	3.43	3.43	3.43	
	25	TC	13.37	13.37	13.37	13.52	14.21	14.21	14.21	14.21	14.64	14.64	14.64	14.64	15.73	15.73	15.73	15.73	
		S/T	0.72	0.80	0.88	0.96	0.58	0.66	0.74	0.82	0.51	0.59	0.67	0.74	0.37	0.44	0.51	0.58	
		PI	3.82	3.82	3.82	3.82	3.82	3.82	3.82	3.82	3.81	3.81	3.81	3.81	3.82	3.82	3.82	3.82	
	30	TC	12.74	12.74	12.86	12.97	13.55	13.55	13.55	13.55	13.95	13.95	13.95	13.95	15.04	15.04	15.04	15.04	
		S/T	0.72	0.81	0.90	0.98	0.58	0.66	0.75	0.83	0.51	0.60	0.68	0.76	0.36	0.44	0.51	0.59	
		PI	4.18	4.18	4.18	4.18	4.19	4.19	4.19	4.19	4.19	4.19	4.19	4.19	4.21	4.21	4.21	4.21	
	35	TC	12.11	12.11	12.23	12.34	12.89	12.89	12.89	12.89	13.29	13.29	13.49	13.29	14.32	14.32	14.32	14.32	
		S/T	0.73	0.83	0.92	1.00	0.59	0.67	0.76	0.85	0.52	0.60	0.68	0.77	0.36	0.44	0.51	0.59	
		PI	4.57	4.57	4.57	4.57	4.58	4.58	4.58	4.58	4.59	4.59	4.60	4.59	4.62	4.62	4.62	4.62	
	40	TC	11.40	11.40	11.51	11.62	12.13	12.13	12.13	12.18	12.52	12.52	12.63	12.52	13.52	13.52	13.52	13.52	
		S/T	0.76	0.86	0.96	1.00	0.60	0.69	0.79	0.88	0.52	0.61	0.71	0.80	0.35	0.44	0.52	0.61	
		PI	5.05	5.05	5.05	5.05	5.06	5.06	5.06	5.06	5.08	5.08	5.08	5.08	5.11	5.11	5.11	5.11	
	46	TC	10.55	10.55	10.67	10.78	11.24	11.24	11.24	11.35	11.61	11.61	11.61	11.61	12.59	12.59	12.59	12.59	
		S/T	0.77	0.87	0.97	1.00	0.60	0.70	0.80	0.90	0.52	0.62	0.72	0.81	0.35	0.44	0.53	0.62	
		PI	5.61	5.61	5.61	5.61	5.63	5.63	5.63	5.63	5.65	5.65	5.65	5.65	5.70	5.70	5.70	5.70	
	50	TC	9.89	9.98	10.06	10.18	10.58	10.58	10.58	10.69	10.92	10.92	10.92	10.92	11.84	11.84	11.84	11.84	
		S/T	0.78	0.89	1.00	1.00	0.61	0.71	0.82	0.92	0.53	0.63	0.73	0.84	0.34	0.44	0.53	0.63	
		PI	6.07	6.07	6.07	6.07	6.10	6.10	6.10	6.10	6.12	6.12	6.12	6.12	6.17	6.17	6.17	6.17	
2040	-15	TC	15.02	15.02	15.17	15.33	15.79	15.79	15.79	15.79	16.17	16.17	16.17	16.17	17.19	17.19	17.19	17.19	
		S/T	0.71	0.81	0.98	1.00	0.57	0.66	0.74	0.83	0.50	0.59	0.67	0.75	0.35	0.42	0.50	0.58	
		PI	3.26	3.26	3.26	3.26	3.25	3.25	3.25	3.25	3.25	3.25	3.25	3.25	3.24	3.24	3.24	3.24	
	-10	TC	14.94	14.94	15.08	15.23	15.71	15.71	15.71	15.71	16.09	16.09	16.09	16.09	17.13	17.13	17.13	17.13	
		S/T	0.72	0.82	0.99	1.00	0.57	0.66	0.75	0.83	0.50	0.59	0.67	0.76	0.35	0.43	0.50	0.58	
		PI	3.24	3.24	3.24	3.24	3.25	3.25	3.25	3.25	3.24	3.24	3.24	3.24	3.24	3.24	3.24	3.24	
	-5	TC	14.85	14.85	14.99	15.14	15.65	15.65	15.65	15.65	16.03	16.03	16.03	16.03	17.09	17.09	17.09	17.09	
		S/T	0.72	0.82	0.99	1.00	0.58	0.66	0.75	0.84	0.51	0.59	0.67	0.76	0.35	0.43	0.51	0.59	
		PI	3.24	3.24	3.24	3.24	3.24	3.24	3.24	3.24	3.24	3.24	3.24	3.24	3.25	3.25	3.25	3.25	
	0	TC	14.77	14.77	14.92	15.07	15.59	15.59	15.59	15.59	15.99	15.99	15.99	15.99	17.07	17.07	17.07	17.07	
		S/T	0.73	0.82	1.00	1.00	0.58	0.67	0.75	0.84	0.51	0.60	0.68	0.76	0.35	0.43	0.51	0.59	
		PI	3.25	3.25	3.25	3.25	3.25	3.25	3.25	3.25	3.25	3.25	3.25	3.25	3.26	3.26	3.26	3.26	
	5	TC	14.70	14.70	14.84	14.99	15.53	15.53	15.53	15.53	15.94	15.94	15.94	15.94	17.06	17.06	17.06	17.06	
		S/T	0.73	0.83	1.00	1.00	0.58	0.67	0.76	0.85	0.51	0.60	0.68	0.77	0.35	0.43	0.51	0.59	
		PI	3.28	3.28	3.28	3.28	3.28	3.28	3.28	3.28	3.28	3.28	3.28	3.28	3.28	3.28	3.28	3.28	
	10	TC	14.61	14.61	14.75	14.90	15.45	15.45	15.45	15.45	15.87	15.87	15.87	15.87	17.01	17.01	17.01	17.01	
		S/T	0.73	0.83	1.00	1.00	0.58	0.67	0.76	0.85	0.51	0.60	0.68	0.77	0.36	0.44	0.51	0.59	
		PI	3.34	3.34	3.34	3.34	3.33	3.33	3.33	3.33	3.33	3.33	3.33	3.33	3.32	3.32	3.32	3.32	
	15	TC	14.49	14.49	14.63	14.78	15.35	15.35	15.35	15.35	15.77	15.77	15.77	15.77	16.94	16.94	16.94	16.94	
		S/T	0.74	0.84	0.93	1.00	0.59	0.68	0.77	0.86	0.52	0.61	0.69	0.78	0.36	0.44	0.52	0.60	
		PI	3.42	3.42	3.42	3.42	3.41	3.41	3.41	3.41	3.40	3.40	3.40	3.40	3.40	3.40	3.40	3.40	
	20	TC	14.33	14.33	14.47	14.61	15.19	15.19	15.19	15.19	15.62	15.62	15.62	15.62	16.80	16.80	16.80	16.80	
		S/T	0.74	0.84	0.93	1.00	0.59	0.68	0.77	0.86	0.52	0.61	0.69	0.78	0.36	0.44	0.52	0.60	
		PI	3.54	3.54	3.54	3.54	3.53	3.53	3.53	3.53	3.52	3.52	3.52	3.52	3.50	3.50	3.50	3.50	
	25	TC	13.67	13.67	13.81	13.95	14.50	14.50	14.50	14.50	14.93	14.93	14.93	14.93	16.08	16.08	16.08	16.08	
		S/T	0.75	0.85	0.95	1.00	0.59	0.69	0.78	0.88	0.52	0.61	0.70	0.80	0.35	0.44	0.52	0.61	
		PI	3.90	3.90	3.90	3.90	3.90	3.90	3.90	3.90	3.90	3.90	3.90	3.90	3.90	3.90	3.90	3.90	
	30	TC	13.01	13.01	13.15	13.29	13.84	13.84	13.84	13.98	14.27	14.27	14.27	14.27	15.36	15.36	15.36	15.36	
		S/T	0.76	0.87	0.97	1.00	0.60	0.70	0.80	0.89	0.52	0.62	0.71	0.81	0.35	0.44	0.53	0.62	
		PI	4.27	4.27	4.27	4.27	4.28	4.28	4.28	4.28	4.28	4.28	4.28	4.28	4.30	4.30	4.30	4.30	
	35	TC	12.37	12.49	12.60	12.72	13.15	13.15	13.15	13.29	13.58	13.58	13.78	13.58	14.64	14.64	14.64	14.64	
		S/T	0.78	0.88	0.99	1.00	0.61	0.71	0.81	0.91	0.53	0.63	0.72	0.83	0.35	0.44	0.53	0.63	
		PI	4.67	4.67	4.67	4.67	4.68	4.68	4.68	4.68	4.69	4.69	4.70	4.69	4.69	4.69	4.69	4.69	
	40	TC	11.55	11.66	11.78	11.89	12.31	12.31	12.31	12.44	12.71	12.71	12.82	12.71	13.72	13.72	13.72	13.72	
		S/T	0.80	0.92	1.00	1.00	0.62	0.73	0.85	0.96	0.53	0.64	0.76	0.87	0.34	0.44	0.54	0.65	
		PI	5.16	5.16	5.16	5.16	5.17	5.17	5.17	5.17	5.18	5.18	5.19	5.18	5.21	5.21	5.21	5.21	
	46	TC	10.68	10.79	10.91	11.02	11.42	11.42	11.42	11.54	11.79	11.79	11.79	11.79	12.76	12.76	12.76	12.76	
		S/T	0.82	0.94	1.00	1.00	0.63	0.74	0.86	0.98	0.54	0.65	0.77	0.88	0.34	0.44	0.55	0.66	
		PI	5.73	5.73	5.73	5.73	5.76	5.76	5.76	5.76	5.77	5.77	5.77	5.77	5.82	5.82	5.82	5.82	
	50	TC	10.03	10.14	10.25	10.37	10.74	10.74	10.85	10.97	11.08	11.08	11.08	11.19	12.02	12.02	12.02	12.02	
		S/T	0.84	0.97	1.00	1.00	0.64	0.76	0.89	1.00	0.54	0.67	0.79	0.91	0.33	0.45	0.56	0.91	
		PI	6.21	6.21	6.21	6.21	6.23	6.23	6.23	6.23	6.25	6.25	6.25	6.25	6.30	6.30	6.30	6.30	

2400	-15	TC	15.33	15.33	15.48	15.63	16.12	16.12	16.12	16.27	16.53	16.53	16.53	16.53	17.54	17.54	17.54	17.54
		S/T	0.74	0.85	1.00	1.00	0.59	0.69	0.78	0.98	0.51	0.61	0.70	0.80	0.34	0.42	0.51	0.61
		PI	3.33	3.33	3.33	3.33	3.32	3.32	3.32	3.32	3.32	3.32	3.32	3.32	3.31	3.31	3.31	3.31
	-10	TC	15.23	15.23	15.38	15.53	16.03	16.03	16.03	16.18	16.45	16.45	16.45	16.45	17.48	17.48	17.48	17.48
		S/T	0.75	0.85	1.00	1.00	0.59	0.69	0.79	0.98	0.51	0.61	0.71	0.81	0.34	0.43	0.51	0.61
		PI	3.31	3.31	3.31	3.31	3.31	3.31	3.31	3.31	3.31	3.31	3.31	3.31	3.31	3.31	3.31	3.31
	-5	TC	15.14	15.14	15.29	15.44	15.97	15.97	15.97	16.12	16.38	16.38	16.38	16.38	17.44	17.44	17.44	17.44
		S/T	0.75	0.86	1.00	1.00	0.59	0.69	0.79	0.99	0.52	0.61	0.71	0.81	0.34	0.43	0.52	0.61
		PI	3.31	3.31	3.31	3.31	3.30	3.30	3.30	3.30	3.31	3.31	3.31	3.31	3.32	3.32	3.32	3.32
	0	TC	15.07	15.07	15.22	15.36	15.91	15.91	15.91	16.06	16.34	16.34	16.34	16.34	17.42	17.42	17.42	17.42
		S/T	0.75	0.86	1.00	1.00	0.60	0.70	0.79	0.99	0.52	0.62	0.72	0.81	0.34	0.43	0.52	0.62
		PI	3.32	3.32	3.32	3.32	3.32	3.32	3.32	3.32	3.33	3.33	3.33	3.33	3.33	3.33	3.33	3.33
	5	TC	14.99	14.99	15.14	15.29	15.85	15.85	15.85	16.00	16.29	16.29	16.29	16.29	17.41	17.41	17.41	17.41
		S/T	0.76	0.87	1.00	1.00	0.60	0.70	0.80	1.00	0.52	0.62	0.72	0.82	0.34	0.43	0.52	0.62
		PI	3.35	3.35	3.35	3.35	3.35	3.35	3.35	3.35	3.35	3.35	3.35	3.35	3.36	3.36	3.36	3.36
	10	TC	14.90	14.90	15.05	15.19	15.78	15.78	15.78	15.92	16.22	16.22	16.22	16.22	17.36	17.36	17.36	17.36
		S/T	0.76	0.87	1.00	1.00	0.60	0.70	0.80	1.00	0.52	0.62	0.72	0.82	0.35	0.44	0.52	0.62
		PI	3.41	3.41	3.41	3.41	3.40	3.40	3.40	3.40	3.40	3.40	3.40	3.40	3.40	3.40	3.40	3.40
	15	TC	14.78	14.78	14.93	15.07	15.67	15.67	15.67	15.81	16.12	16.12	16.12	16.12	17.29	17.29	17.29	17.29
		S/T	0.77	0.88	0.99	1.00	0.61	0.71	0.81	0.91	0.53	0.63	0.73	0.83	0.35	0.44	0.53	0.63
		PI	3.49	3.49	3.49	3.49	3.48	3.48	3.48	3.48	3.48	3.48	3.48	3.48	3.47	3.47	3.47	3.47
	20	TC	14.61	14.61	14.76	14.90	15.50	15.50	15.50	15.65	15.96	15.96	15.96	15.96	17.14	17.14	17.14	17.14
		S/T	0.77	0.88	0.99	1.00	0.61	0.71	0.81	0.91	0.53	0.63	0.73	0.83	0.35	0.44	0.53	0.63
		PI	3.61	3.61	3.61	3.61	3.60	3.60	3.60	3.60	3.60	3.60	3.60	3.60	3.58	3.58	3.58	3.58
	25	TC	13.95	14.10	14.24	14.38	14.81	14.81	14.81	14.96	15.25	15.25	15.25	15.25	16.42	16.42	16.42	16.42
		S/T	0.79	0.90	1.00	1.00	0.61	0.72	0.83	0.93	0.53	0.64	0.74	0.85	0.34	0.44	0.54	0.64
		PI	3.98	3.98	3.98	3.98	3.98	3.98	3.98	3.98	3.98	3.98	3.98	3.98	3.98	3.98	3.98	3.98
	30	TC	13.29	13.44	13.58	13.72	14.13	14.13	14.13	14.27	14.56	14.56	14.56	14.56	15.68	15.68	15.68	15.68
		S/T	0.80	0.92	1.00	1.00	0.62	0.73	0.85	0.96	0.53	0.64	0.76	0.87	0.34	0.44	0.54	0.65
		PI	4.36	4.36	4.36	4.36	4.37	4.37	4.37	4.37	4.37	4.37	4.37	4.37	4.39	4.39	4.39	4.39
	35	TC	12.63	12.75	12.86	12.98	13.44	13.44	13.44	13.58	13.87	13.87	**14.07**	14.21	14.96	14.96	14.96	14.96
		S/T	0.82	0.94	1.00	1.00	0.63	0.75	0.87	0.98	0.54	0.65	**0.77**	0.88	0.34	0.44	0.55	0.66
		PI	4.77	4.77	4.77	4.77	4.78	4.78	4.78	4.78	4.79	4.79	**4.80**	4.79	4.82	4.82	4.82	4.82
	40	TC	11.79	11.91	12.02	12.14	12.57	12.57	12.62	12.75	12.97	12.97	13.08	13.21	14.01	14.01	14.01	14.01
		S/T	0.85	0.99	1.00	1.00	0.64	0.78	0.90	1.00	0.55	0.68	0.80	0.93	0.33	0.45	0.57	0.90
		PI	5.26	5.26	5.26	5.26	5.28	5.28	5.28	5.28	5.29	5.29	5.30	5.29	5.33	5.33	5.33	5.33
	46	TC	10.91	11.02	11.14	11.25	11.65	11.65	11.76	11.88	12.02	12.02	12.02	12.13	13.02	13.02	13.02	13.02
		S/T	0.87	1.00	1.00	1.00	0.65	0.79	0.92	1.00	0.55	0.69	0.82	0.95	0.33	0.45	0.57	0.92
		PI	5.85	5.85	5.85	5.85	5.88	5.88	5.88	5.88	5.89	5.89	5.89	5.89	5.94	5.94	5.94	5.94
	50	TC	10.25	10.37	10.48	10.60	10.97	10.97	11.08	11.19	11.31	11.31	11.31	11.42	12.28	12.28	12.28	12.28
		S/T	0.89	1.00	1.00	1.00	0.67	0.81	0.95	1.00	0.56	0.70	0.85	0.98	0.33	0.46	0.59	0.97
		PI	6.34	6.34	6.34	6.34	6.36	6.36	6.36	6.36	6.38	6.38	6.38	6.38	6.43	6.43	6.43	6.43

TC:Total Cooling Capacity (kW)

S/T:Sensible Cooling Capacity Ratio

PI:Power Input(kW)

Note: The table shows the case where the operation frequency of a compressor is fixed.

DDMX-175N-09M25+YDAX-175H-09T35																		
INDOOR AIRFLOW (CMH)	OUTDOOR DB(℃)	ID WB (℃)	16.0				18.0				19.0				22.0			
		ID DB (℃)	23.0	25.0	27.0	29.0	23.0	25.0	27.0	29.0	23.0	25.0	27.0	29.0	23.0	25.0	27.0	29.0
1820	-15	TC	15.98	15.98	15.98	16.13	16.80	17.13	17.13	17.13	17.20	17.20	17.20	17.20	18.27	18.27	18.27	18.27
		S/T	0.69	0.76	0.84	0.91	0.55	0.63	0.70	0.77	0.49	0.57	0.64	0.70	0.36	0.42	0.49	0.55
		PI	3.50	3.51	3.51	3.50	3.49	3.49	3.49	3.49	3.49	3.49	3.49	3.49	3.48	3.48	3.48	3.48
	-10	TC	15.88	15.88	15.88	16.03	16.71	17.04	17.04	17.04	17.12	17.12	17.12	17.12	18.21	18.21	18.21	18.21
		S/T	0.69	0.77	0.84	0.91	0.55	0.63	0.71	0.78	0.49	0.57	0.64	0.71	0.36	0.43	0.49	0.55
		PI	3.49	3.49	3.49	3.49	3.48	3.48	3.48	3.48	3.48	3.48	3.48	3.48	3.48	3.48	3.48	3.48
	-5	TC	15.79	15.79	15.79	15.94	16.64	16.97	16.97	16.97	17.05	17.05	17.05	17.05	18.16	18.16	18.16	18.16
		S/T	0.69	0.77	0.85	0.92	0.56	0.63	0.71	0.78	0.50	0.58	0.64	0.71	0.36	0.43	0.50	0.56
		PI	3.48	3.49	3.49	3.48	3.48	3.48	3.48	3.48	3.48	3.48	3.48	3.48	3.49	3.49	3.49	3.49
	0	TC	15.71	15.71	15.71	15.86	16.58	16.91	16.91	16.91	17.01	17.01	17.01	17.01	18.14	18.14	18.14	18.14
		S/T	0.70	0.77	0.85	0.92	0.56	0.64	0.72	0.78	0.50	0.58	0.65	0.72	0.36	0.43	0.50	0.56
		PI	3.50	3.50	3.50	3.50	3.49	3.49	3.49	3.49	3.49	3.49	3.49	3.49	3.50	3.50	3.50	3.50
	5	TC	15.63	15.63	15.63	15.78	16.52	16.85	16.85	16.85	16.95	16.95	16.95	16.95	18.13	18.13	18.13	18.13
		S/T	0.70	0.78	0.86	0.93	0.56	0.64	0.72	0.79	0.50	0.58	0.65	0.72	0.36	0.43	0.50	0.56
		PI	3.53	3.53	3.53	3.53	3.52	3.52	3.52	3.52	3.52	3.52	3.52	3.52	3.53	3.53	3.53	3.53
	10	TC	15.53	15.53	15.53	15.68	16.44	16.77	16.77	16.77	16.88	16.88	16.88	16.88	18.08	18.08	18.08	18.08
		S/T	0.70	0.78	0.86	0.93	0.56	0.64	0.72	0.79	0.50	0.58	0.65	0.72	0.37	0.44	0.50	0.56
		PI	3.59	3.59	3.59	3.59	3.58	3.58	3.58	3.58	3.58	3.58	3.58	3.58	3.57	3.57	3.57	3.57
	15	TC	15.41	15.41	15.41	15.55	16.33	16.65	16.65	16.65	16.78	16.78	16.78	16.78	18.01	18.01	18.01	18.01
		S/T	0.71	0.79	0.87	0.94	0.57	0.65	0.73	0.80	0.51	0.59	0.66	0.73	0.37	0.44	0.51	0.57
		PI	3.67	3.68	3.68	3.67	3.66	3.66	3.66	3.66	3.66	3.66	3.66	3.66	3.65	3.65	3.65	3.65
	20	TC	15.23	15.23	15.23	15.38	16.15	16.15	16.15	16.15	16.61	16.61	16.61	16.61	17.85	17.85	17.85	17.85
		S/T	0.71	0.79	0.87	0.94	0.57	0.65	0.73	0.80	0.51	0.59	0.66	0.73	0.37	0.44	0.51	0.57
		PI	3.80	3.81	3.81	3.80	3.79	3.79	3.79	3.79	3.78	3.78	3.78	3.78	3.76	3.76	3.76	3.76
	25	TC	14.54	14.54	14.54	14.69	15.44	15.44	15.44	15.44	15.90	15.90	15.90	15.90	17.10	17.10	17.10	17.10
		S/T	0.72	0.80	0.88	0.96	0.58	0.66	0.74	0.81	0.51	0.59	0.67	0.74	0.37	0.44	0.51	0.58
		PI	4.19	4.19	4.19	4.19	4.19	4.19	4.19	4.19	4.19	4.19	4.19	4.19	4.19	4.19	4.19	4.19
	30	TC	13.85	13.85	14.00	14.14	14.72	14.72	14.72	14.72	15.18	15.18	15.18	15.18	16.36	16.36	16.36	16.36
		S/T	0.72	0.81	0.90	0.98	0.58	0.66	0.75	0.83	0.51	0.59	0.68	0.76	0.36	0.44	0.51	0.59
		PI	4.59	4.59	4.59	4.59	4.60	4.60	4.60	4.60	4.60	4.60	4.60	4.60	4.62	4.62	4.62	4.62
	35	TC	13.17	13.17	13.31	13.45	14.00	14.00	14.00	14.00	14.43	14.43	14.66	14.43	15.58	15.58	15.58	15.58
		S/T	0.73	0.83	0.92	1.00	0.59	0.67	0.76	0.85	0.52	0.60	0.68	0.77	0.36	0.44	0.51	0.59
		PI	5.01	5.01	5.01	5.01	5.03	5.03	5.03	5.03	5.04	5.04	5.05	5.04	5.08	5.08	5.08	5.08
	40	TC	12.41	12.41	12.54	12.67	13.22	13.22	13.22	13.27	13.64	13.64	13.76	13.64	14.74	14.74	14.74	14.74
		S/T	0.76	0.86	0.96	1.00	0.60	0.69	0.79	0.88	0.52	0.61	0.71	0.80	0.35	0.44	0.52	0.61
		PI	5.54	5.54	5.54	5.54	5.56	5.56	5.56	5.56	5.57	5.57	5.58	5.57	5.61	5.61	5.61	5.61
	46	TC	11.49	11.49	11.60	11.72	12.26	12.26	12.26	12.38	12.67	12.67	12.67	12.67	13.70	13.70	13.70	13.70
		S/T	0.77	0.87	0.97	1.00	0.60	0.70	0.80	0.90	0.52	0.62	0.72	0.81	0.35	0.44	0.53	0.62
		PI	6.16	6.16	6.16	6.16	6.18	6.18	6.18	6.18	6.20	6.20	6.20	6.20	6.25	6.25	6.25	6.25
	50	TC	10.77	10.88	11.00	11.11	11.51	11.51	11.51	11.63	11.92	11.92	11.92	11.92	12.90	12.90	12.90	12.90
		S/T	0.78	0.89	1.00	1.00	0.61	0.71	0.82	0.92	0.53	0.63	0.73	0.84	0.34	0.44	0.53	0.63
		PI	6.67	6.67	6.67	6.67	6.70	6.70	6.70	6.70	6.71	6.71	6.71	6.71	6.77	6.77	6.77	6.77
2210	-15	TC	16.28	16.28	16.43	16.59	17.13	17.13	17.13	17.13	17.57	17.57	17.57	17.57	18.66	18.66	18.66	18.66
		S/T	0.71	0.81	0.98	1.00	0.57	0.66	0.74	0.83	0.50	0.59	0.67	0.75	0.35	0.42	0.50	0.58
		PI	3.57	3.57	3.57	3.57	3.55	3.55	3.55	3.55	3.55	3.55	3.55	3.55	3.55	3.55	3.55	3.55
	-10	TC	16.19	16.19	16.34	16.49	17.04	17.04	17.04	17.04	17.48	17.48	17.48	17.48	18.59	18.59	18.59	18.59
		S/T	0.72	0.82	0.99	1.00	0.57	0.66	0.75	0.83	0.50	0.59	0.67	0.76	0.35	0.43	0.50	0.58
		PI	3.55	3.55	3.55	3.55	3.54	3.54	3.54	3.54	3.55	3.55	3.55	3.55	3.55	3.55	3.55	3.55
	-5	TC	16.09	16.09	16.24	16.39	16.97	16.97	16.97	16.97	17.41	17.41	17.41	17.41	18.55	18.55	18.55	18.55
		S/T	0.72	0.82	0.99	1.00	0.58	0.66	0.75	0.84	0.51	0.59	0.67	0.76	0.35	0.43	0.51	0.59
		PI	3.54	3.54	3.54	3.54	3.54	3.54	3.54	3.54	3.55	3.55	3.55	3.55	3.55	3.55	3.55	3.55
	0	TC	16.01	16.01	16.16	16.31	16.91	16.91	16.91	16.91	17.37	17.37	17.37	17.37	18.53	18.53	18.53	18.53
		S/T	0.73	0.82	1.00	1.00	0.58	0.67	0.75	0.84	0.51	0.60	0.68	0.76	0.35	0.43	0.51	0.59
		PI	3.56	3.56	3.56	3.56	3.55	3.55	3.55	3.55	3.56	3.56	3.56	3.56	3.57	3.57	3.57	3.57
	5	TC	15.93	15.93	16.08	16.23	16.85	16.85	16.85	16.85	17.31	17.31	17.31	17.31	18.52	18.52	18.52	18.52
		S/T	0.73	0.83	1.00	1.00	0.58	0.67	0.76	0.85	0.51	0.60	0.68	0.77	0.35	0.43	0.51	0.59
		PI	3.59	3.59	3.59	3.59	3.58	3.58	3.58	3.58	3.59	3.59	3.59	3.59	3.59	3.59	3.59	3.59
	10	TC	15.83	15.83	15.98	16.13	16.77	16.77	16.77	16.77	17.24	17.24	17.24	17.24	18.47	18.47	18.47	18.47
		S/T	0.73	0.83	1.00	1.00	0.58	0.67	0.76	0.85	0.51	0.60	0.68	0.77	0.36	0.44	0.51	0.59
		PI	3.65	3.65	3.65	3.65	3.64	3.64	3.64	3.64	3.64	3.64	3.64	3.64	3.64	3.64	3.64	3.64
	15	TC	15.70	15.70	15.85	16.00	16.65	16.65	16.65	16.65	17.13	17.13	17.13	17.13	18.39	18.39	18.39	18.39
		S/T	0.74	0.84	0.93	1.00	0.59	0.68	0.77	0.86	0.52	0.61	0.69	0.78	0.36	0.44	0.52	0.60
		PI	3.74	3.74	3.74	3.74	3.72	3.72	3.72	3.72	3.73	3.73	3.73	3.73	3.72	3.72	3.72	3.72
	20	TC	15.53	15.53	15.67	15.82	16.48	16.48	16.48	16.48	16.97	16.97	16.97	16.97	18.23	18.23	18.23	18.23
		S/T	0.74	0.84	0.93	1.00	0.59	0.68	0.77	0.86	0.52	0.61	0.69	0.78	0.36	0.44	0.52	0.60
		PI	3.87	3.87	3.87	3.87	3.85	3.85	3.85	3.85	3.85	3.85	3.85	3.85	3.83	3.83	3.83	3.83
	25	TC	14.81	14.81	14.95	15.10	15.73	15.73	15.73	15.73	16.22	16.22	16.22	16.22	17.45	17.45	17.45	17.45
		S/T	0.75	0.85	0.95	1.00	0.59	0.69	0.78	0.88	0.52	0.61	0.70	0.79	0.35	0.44	0.52	0.61
		PI	4.26	4.26	4.26	4.26	4.26	4.26	4.26	4.26	4.26	4.26	4.26	4.26	4.26	4.26	4.26	4.26
	30	TC	14.12	14.12	14.26	14.41	15.01	15.01	15.01	15.15	15.47	15.47	15.47	15.47	16.68	16.68	16.68	16.68
		S/T	0.76	0.87	0.97	1.00	0.60	0.70	0.80	0.89	0.52	0.62	0.71	0.81	0.35	0.44	0.53	0.62
		PI	4.67	4.67	4.67	4.67	4.68	4.68	4.68	4.68	4.68	4.68	4.68	4.68	4.70	4.70	4.70	4.70
	35	TC	13.40	13.54	13.69	13.83	14.29	14.29	14.29	14.44	14.72	14.72	14.95	14.72	15.87	15.87	15.87	15.87
		S/T	0.78	0.88	0.99	1.00	0.61	0.71	0.81	0.91	0.53	0.63	0.72	0.83	0.35	0.44	0.53	0.63
		PI	5.10	5.10	5.10	5.10	5.12	5.12	5.12	5.12	5.13	5.13	5.14	5.13	5.13	5.13	5.13	5.13
	40	TC	12.48	12.61	12.74	12.87	13.31	13.31	13.31	13.44	13.72	13.72	13.85	13.72	14.82	14.82	14.82	14.82
		S/T	0.80	0.92	1.00	1.00	0.62	0.73	0.85	0.96	0.53	0.64	0.76	0.87	0.34	0.44	0.54	0.65
		PI	5.63	5.63	5.63	5.63	5.65	5.65	5.65	5.65	5.66	5.66	5.67	5.66	5.69	5.69	5.69	5.69
	46	TC	11.57	11.68	11.79	11.91	12.33	12.33	12.33	12.45	12.73	12.73	12.73	12.73	13.78	13.78	13.78	13.78
		S/T	0.82	0.94	1.00	1.00	0.63	0.75	0.86	0.98	0.54	0.65	0.77	0.88	0.34	0.44	0.55	0.66
		PI	6.26	6.26	6.26	6.26	6.29	6.29	6.29	6.29	6.30	6.30	6.30	6.30	6.36	6.36	6.36	6.36
	50	TC	10.86	10.97	11.08	11.20	11.60	11.60	11.71	11.82	11.99	11.99	11.99	12.11	12.99	12.99	12.99	12.99
		S/T	0.84	0.97	1.00	1.00	0.64	0.76	0.89	1.00	0.54	0.67	0.79	0.91	0.33	0.45	0.56	0.91
		PI	6.78	6.78	6.78	6.78	6.81	6.81	6.81	6.81	6.83	6.83	6.83	6.83	6.88	6.88	6.88	6.88

2600	-15	TC	16.62	16.62	16.80	16.98	17.46	17.46	17.46	17.64	17.89	17.89	17.89	17.89	19.01	19.01	19.01	19.01
		S/T	0.74	0.85	1.00	1.00	0.59	0.69	0.78	0.98	0.51	0.61	0.70	0.80	0.34	0.42	0.51	0.61
		PI	3.64	3.64	3.64	3.64	3.63	3.63	3.63	3.63	3.63	3.63	3.63	3.63	3.62	3.62	3.62	3.62
	-10	TC	16.52	16.52	16.70	16.88	17.37	17.37	17.37	17.54	17.80	17.80	17.80	17.80	18.95	18.95	18.95	18.95
		S/T	0.75	0.85	1.00	1.00	0.59	0.69	0.79	0.98	0.51	0.61	0.71	0.81	0.34	0.43	0.51	0.61
		PI	3.62	3.62	3.62	3.62	3.62	3.62	3.62	3.62	3.62	3.62	3.62	3.62	3.62	3.62	3.62	3.62
	-5	TC	16.42	16.42	16.60	16.78	17.30	17.30	17.30	17.48	17.74	17.74	17.74	17.74	18.90	18.90	18.90	18.90
		S/T	0.75	0.86	1.00	1.00	0.59	0.69	0.79	0.99	0.52	0.61	0.71	0.81	0.34	0.43	0.52	0.61
		PI	3.61	3.61	3.61	3.61	3.62	3.62	3.62	3.62	3.62	3.62	3.62	3.62	3.63	3.63	3.63	3.63
	0	TC	16.34	16.34	16.51	16.69	17.23	17.23	17.23	17.41	17.69	17.69	17.69	17.69	18.88	18.88	18.88	18.88
		S/T	0.75	0.86	1.00	1.00	0.60	0.70	0.79	0.99	0.52	0.62	0.72	0.81	0.34	0.43	0.52	0.62
		PI	3.63	3.63	3.63	3.63	3.63	3.63	3.63	3.63	3.63	3.63	3.63	3.63	3.64	3.64	3.64	3.64
	5	TC	16.25	16.25	16.43	16.61	17.17	17.17	17.17	17.35	17.63	17.63	17.63	17.63	18.87	18.87	18.87	18.87
		S/T	0.76	0.87	1.00	1.00	0.60	0.70	0.80	1.00	0.52	0.62	0.72	0.82	0.34	0.43	0.52	0.62
		PI	3.66	3.66	3.66	3.66	3.66	3.66	3.66	3.66	3.66	3.66	3.66	3.66	3.67	3.67	3.67	3.67
	10	TC	16.16	16.16	16.33	16.51	17.09	17.09	17.09	17.26	17.56	17.56	17.56	17.56	18.82	18.82	18.82	18.82
		S/T	0.76	0.87	1.00	1.00	0.60	0.70	0.80	1.00	0.52	0.62	0.72	0.82	0.35	0.44	0.52	0.62
		PI	3.72	3.72	3.72	3.72	3.72	3.72	3.72	3.72	3.72	3.72	3.72	3.72	3.72	3.72	3.72	3.72
	15	TC	16.02	16.02	16.20	16.37	16.97	16.97	16.97	17.15	17.45	17.45	17.45	17.45	18.74	18.74	18.74	18.74
		S/T	0.77	0.88	0.99	1.00	0.61	0.71	0.81	0.91	0.53	0.63	0.73	0.83	0.35	0.44	0.53	0.63
		PI	3.81	3.81	3.81	3.81	3.81	3.81	3.81	3.81	3.80	3.80	3.80	3.80	3.79	3.79	3.79	3.79
	20	TC	15.84	15.84	16.02	16.19	16.79	16.79	16.79	16.97	17.28	17.28	17.28	17.28	18.58	18.58	18.58	18.58
		S/T	0.77	0.88	0.99	1.00	0.61	0.71	0.81	0.91	0.53	0.63	0.73	0.83	0.35	0.44	0.53	0.63
		PI	3.95	3.95	3.95	3.95	3.94	3.94	3.94	3.94	3.93	3.93	3.93	3.93	3.91	3.91	3.91	3.91
	25	TC	15.10	15.24	15.38	15.53	16.05	16.05	16.05	16.22	16.53	16.53	16.53	16.53	17.77	17.77	17.77	17.77
		S/T	0.79	0.90	1.00	1.00	0.61	0.72	0.83	0.93	0.53	0.64	0.74	0.85	0.34	0.44	0.54	0.64
		PI	4.35	4.35	4.35	4.35	4.35	4.35	4.35	4.35	4.35	4.35	4.35	4.35	4.35	4.35	4.35	4.35
	30	TC	14.41	14.55	14.69	14.84	15.30	15.30	15.30	15.44	15.79	15.79	15.79	15.79	16.99	16.99	16.99	16.99
		S/T	0.80	0.92	1.00	1.00	0.62	0.73	0.85	0.96	0.53	0.64	0.76	0.87	0.34	0.44	0.54	0.65
		PI	4.77	4.77	4.77	4.77	4.78	4.78	4.78	4.78	4.78	4.78	4.78	4.78	4.80	4.80	4.80	4.80
	35	TC	13.66	13.80	13.95	14.09	14.55	14.55	14.55	14.69	15.01	15.01	**15.24**	15.38	16.19	16.19	16.19	16.19
		S/T	0.82	0.94	1.00	1.00	0.63	0.75	0.87	0.98	0.54	0.66	**0.77**	0.88	0.34	0.44	0.55	0.66
		PI	5.21	5.21	5.21	5.21	5.23	5.23	5.23	5.23	5.24	5.24	**5.25**	5.24	5.28	5.28	5.28	5.28
	40	TC	12.72	12.85	12.98	13.11	13.57	13.57	13.62	13.75	14.00	14.00	14.12	14.26	15.12	15.12	15.12	15.12
		S/T	0.85	0.99	1.00	1.00	0.65	0.78	0.90	1.00	0.55	0.68	0.80	0.93	0.33	0.45	0.57	0.90
		PI	5.75	5.75	5.75	5.75	5.77	5.77	5.77	5.77	5.78	5.78	5.79	5.78	5.83	5.83	5.83	5.83
	46	TC	11.79	11.91	12.02	12.14	12.59	12.59	12.70	12.82	12.99	12.99	12.99	13.13	14.07	14.07	14.07	14.07
		S/T	0.87	1.00	1.00	1.00	0.65	0.79	0.92	1.00	0.55	0.69	0.82	0.95	0.33	0.45	0.57	0.92
		PI	6.39	6.39	6.39	6.39	6.42	6.42	6.42	6.42	6.44	6.44	6.44	6.44	6.49	6.49	6.49	6.49
	50	TC	11.06	11.17	11.28	11.40	11.82	11.82	11.94	12.05	12.22	12.22	12.22	12.33	13.24	13.24	13.24	13.24
		S/T	0.90	1.00	1.00	1.00	0.67	0.81	0.95	1.00	0.56	0.70	0.85	0.98	0.33	0.46	0.59	0.97
		PI	6.92	6.92	6.92	6.92	6.95	6.95	6.95	6.95	6.97	6.97	6.97	6.97	7.03	7.03	7.03	7.03

TC:Total Cooling Capacity (kW)

S/T:Sensible Cooling Capacity Ratio

PI:Power Input(kW)

Note: The table shows the case where the operation frequency of a compressor is fixed.

7.2 Heating

12k									[SI_Unit]
INDOOR AIRFLOW (CMH)	HEATING PERFORMANCE AT INDOOR DRY BULB TEMPERATURE								
	OUTDOOR DB(°C)	TC:TOTAL CAPACITY IN KILOWATTS (KW)				PI:TOTAL POWER IN KILOWATTS (KW)			
		Indoor Conditions (DB °C)				Indoor Conditions (DB °C)			
		16.0	20.0	22.0	24.0	16.0	20.0	22.0	24.0
300	-15.0	2.61	2.59	2.59	2.56	1.17	1.21	1.18	1.19
	-10.0	2.79	2.76	2.76	2.74	1.25	1.29	1.26	1.27
	-7.0	2.92	2.90	2.90	2.87	1.32	1.37	1.34	1.35
	-5.6	2.98	2.95	2.95	2.92	1.29	1.30	1.31	1.31
	-2.8	3.04	3.01	3.01	2.98	1.23	1.24	1.24	1.25
	0.0	3.07	3.04	3.01	3.01	1.17	1.17	1.18	1.18
	2.8	3.21	3.18	3.16	3.13	1.12	1.13	1.13	1.13
	5.6	3.45	3.42	3.39	3.36	1.07	1.07	1.08	1.08
	7.0	3.73	3.69	3.61	3.61	1.05	1.02	1.05	1.05
	11.1	3.90	3.84	3.81	3.78	0.96	0.96	0.96	0.96
	13.9	4.01	3.98	3.96	3.93	0.91	0.90	0.90	0.90
	16.7	4.16	4.10	4.07	4.04	0.85	0.84	0.84	0.83
	18.0	4.22	4.16	4.13	4.10	0.82	0.81	0.81	0.80
480	-15.0	2.66	2.63	2.63	2.61	1.18	1.22	1.20	1.20
	-10.0	2.84	2.81	2.81	2.78	1.25	1.30	1.28	1.28
	-7.0	2.97	2.95	2.95	2.92	1.33	1.38	1.36	1.36
	-5.6	3.04	3.01	3.01	2.98	1.30	1.31	1.32	1.33
	-2.8	3.13	3.07	3.07	3.04	1.24	1.25	1.25	1.26
	0.0	3.16	3.10	3.07	3.07	1.17	1.18	1.19	1.19
	2.8	3.27	3.24	3.21	3.18	1.13	1.14	1.14	1.14
	5.6	3.53	3.50	3.47	3.45	1.08	1.08	1.08	1.09
	7.0	3.81	3.78	3.69	3.69	1.06	1.03	1.06	1.06
	11.1	3.98	3.93	3.90	3.87	0.97	0.97	0.97	0.97
	13.9	4.13	4.07	4.04	4.01	0.91	0.91	0.91	0.90
	16.7	4.28	4.22	4.19	4.16	0.86	0.85	0.84	0.84
	18.0	4.33	4.28	4.25	4.22	0.83	0.82	0.81	0.81
600	-15.0	2.69	2.67	2.67	2.64	1.19	1.24	1.21	1.22
	-10.0	2.87	2.85	2.85	2.82	1.27	1.32	1.29	1.30
	-7.0	3.01	2.98	2.98	2.95	1.35	1.40	1.37	1.38
	-5.6	3.07	3.04	3.04	3.01	1.32	1.33	1.34	1.34
	-2.8	3.16	3.10	3.10	3.07	1.25	1.26	1.27	1.27
	0.0	3.18	3.13	3.13	3.10	1.19	1.20	1.20	1.20
	2.8	3.30	3.27	3.24	3.21	1.15	1.15	1.15	1.16
	5.6	3.56	3.53	3.50	3.47	1.09	1.10	1.10	1.10
	7.0	3.84	3.81	3.72	3.72	1.07	1.04	1.07	1.07
	11.1	4.01	3.96	3.93	3.90	0.98	0.98	0.98	0.98
	13.9	4.16	4.10	4.07	4.04	0.92	0.92	0.92	0.91
	16.7	4.30	4.25	4.22	4.16	0.87	0.86	0.85	0.85
	18.0	4.36	4.30	4.28	4.25	0.84	0.83	0.82	0.82

Note: The table shows the case where the operation frequency of a compressor is fixed.

18k								[SI_Unit]
INDOOR AIRFLOW (CMH)	HEATING PERFORMANCE AT INDOOR DRY BULB TEMPERATURE							
	OUTDOOR DB(°C)	TC:TOTAL CAPACITY IN KILOWATTS (KW)				PI:TOTAL POWER IN KILOWATTS (KW)			
		Indoor Conditions (DB °C)				Indoor Conditions (DB °C)			
		16.0	20.0	22.0	24.0	16.0	20.0	22.0	24.0
515	-15.0	3.93	3.87	3.85	3.82	1.45	1.50	1.49	1.50
	-10.0	4.19	4.14	4.11	4.08	1.55	1.60	1.59	1.60
	-7.0	4.39	4.33	4.31	4.28	1.64	1.70	1.69	1.70
	-5.6	4.48	4.42	4.39	4.36	1.62	1.65	1.66	1.67
	-2.8	4.54	4.48	4.45	4.45	1.57	1.60	1.61	1.63
	0.0	4.57	4.51	4.48	4.45	1.53	1.56	1.57	1.58
	2.8	4.74	4.68	4.65	4.63	1.51	1.53	1.54	1.55
	5.6	5.09	5.03	5.00	4.97	1.48	1.50	1.52	1.53
	7.0	5.46	5.39	5.31	5.25	1.46	1.47	1.49	1.50
	11.1	5.68	5.60	5.57	5.51	1.41	1.43	1.44	1.44
	13.9	5.86	5.77	5.74	5.68	1.37	1.39	1.40	1.41
	16.7	6.03	5.95	5.92	5.86	1.34	1.35	1.36	1.37
	18.0	6.12	6.03	6.00	5.95	1.32	1.33	1.34	1.35
706	-15.0	4.00	3.95	3.92	3.90	1.47	1.51	1.50	1.52
	-10.0	4.27	4.22	4.19	4.16	1.57	1.62	1.60	1.62
	-7.0	4.48	4.42	4.39	4.36	1.66	1.72	1.70	1.72
	-5.6	4.57	4.51	4.48	4.45	1.63	1.66	1.67	1.69
	-2.8	4.63	4.57	4.57	4.54	1.59	1.62	1.63	1.64
	0.0	4.65	4.60	4.57	4.54	1.55	1.57	1.58	1.60
	2.8	4.86	4.80	4.77	4.71	1.53	1.54	1.55	1.57
	5.6	5.21	5.15	5.12	5.06	1.50	1.52	1.53	1.54
	7.0	5.57	5.51	5.39	5.37	1.48	1.49	1.51	1.52
	11.1	5.80	5.71	5.68	5.63	1.43	1.45	1.46	1.47
	13.9	5.97	5.92	5.86	5.83	1.39	1.41	1.42	1.43
	16.7	6.18	6.09	6.03	6.00	1.36	1.37	1.38	1.39
	18.0	6.26	6.18	6.12	6.09	1.34	1.36	1.36	1.37
911	-15.0	4.03	3.98	3.95	3.93	1.48	1.53	1.52	1.53
	-10.0	4.30	4.25	4.22	4.19	1.58	1.63	1.62	1.63
	-7.0	4.51	4.45	4.42	4.39	1.67	1.73	1.72	1.73
	-5.6	4.60	4.54	4.51	4.48	1.65	1.68	1.69	1.71
	-2.8	4.68	4.63	4.60	4.57	1.61	1.63	1.65	1.66
	0.0	4.71	4.65	4.63	4.60	1.56	1.59	1.60	1.62
	2.8	4.89	4.83	4.80	4.77	1.54	1.56	1.57	1.59
	5.6	5.27	5.18	5.15	5.12	1.52	1.53	1.54	1.56
	7.0	5.66	5.57	5.45	5.42	1.50	1.51	1.53	1.54
	11.1	5.86	5.77	5.74	5.71	1.45	1.47	1.48	1.49
	13.9	6.06	5.97	5.92	5.89	1.41	1.43	1.44	1.45
	16.7	6.24	6.15	6.12	6.06	1.38	1.40	1.40	1.41
	18.0	6.35	6.24	6.21	6.15	1.36	1.38	1.39	1.39

Note: The table shows the case where the operation frequency of a compressor is fixed.

24k									[SI_Unit]
INDOOR AIRFLOW (CMH)	HEATING PERFORMANCE AT INDOOR DRY BULB TEMPERATURE								
	OUTDOOR DB(°C)	TC:TOTAL CAPACITY IN KILOWATTS (KW)				PI:TOTAL POWER IN KILOWATTS (KW)			
		Indoor Conditions (DB °C)				Indoor Conditions (DB °C)			
		16.0	20.0	22.0	24.0	16.0	20.0	22.0	24.0
825	-15.0	5.37	5.32	5.30	5.27	2.21	2.29	2.25	2.26
	-10.0	5.74	5.68	5.66	5.63	2.36	2.44	2.40	2.41
	-7.0	6.01	5.95	5.93	5.90	2.51	2.60	2.55	2.56
	-5.6	6.13	6.07	6.04	6.01	2.44	2.46	2.47	2.48
	-2.8	6.25	6.16	6.13	6.10	2.31	2.33	2.34	2.35
	0.0	6.27	6.19	6.16	6.10	2.19	2.20	2.20	2.21
	2.8	6.51	6.42	6.39	6.33	2.08	2.09	2.09	2.09
	5.6	6.97	6.88	6.86	6.80	1.97	1.97	1.97	1.97
	7.0	7.48	7.39	7.24	7.21	1.92	1.86	1.92	1.92
	11.1	7.77	7.65	7.62	7.56	1.75	1.74	1.73	1.73
	13.9	8.03	7.91	7.85	7.79	1.64	1.62	1.61	1.60
	16.7	8.26	8.14	8.08	8.03	1.52	1.50	1.49	1.47
	18.0	8.37	8.26	8.20	8.14	1.46	1.44	1.43	1.42
1035	-15.0	5.48	5.43	5.40	5.38	2.24	2.32	2.27	2.27
	-10.0	5.85	5.80	5.77	5.74	2.39	2.47	2.42	2.43
	-7.0	6.13	6.07	6.05	6.02	2.54	2.62	2.57	2.58
	-5.6	6.25	6.19	6.16	6.13	2.47	2.49	2.50	2.51
	-2.8	6.36	6.27	6.25	6.22	2.34	2.35	2.36	2.37
	0.0	6.39	6.30	6.27	6.22	2.21	2.22	2.23	2.23
	2.8	6.65	6.56	6.51	6.48	2.10	2.11	2.11	2.11
	5.6	7.12	7.03	6.97	6.94	2.00	2.00	1.99	1.99
	7.0	7.63	7.53	7.39	7.36	1.94	1.88	1.94	1.94
	11.1	7.91	7.82	7.77	7.71	1.77	1.76	1.75	1.75
	13.9	8.17	8.05	8.00	7.94	1.65	1.64	1.63	1.62
	16.7	8.43	8.32	8.26	8.17	1.54	1.51	1.50	1.49
	18.0	8.55	8.43	8.37	8.29	1.48	1.45	1.44	1.43
1229	-15.0	5.53	5.48	5.45	5.43	2.26	2.34	2.29	2.30
	-10.0	5.90	5.85	5.82	5.80	2.41	2.49	2.44	2.45
	-7.0	6.19	6.13	6.10	6.07	2.56	2.65	2.60	2.61
	-5.6	6.30	6.25	6.22	6.19	2.49	2.51	2.52	2.53
	-2.8	6.42	6.36	6.30	6.27	2.36	2.38	2.38	2.39
	0.0	6.45	6.36	6.33	6.30	2.23	2.24	2.25	2.25
	2.8	6.71	6.62	6.59	6.54	2.12	2.13	2.13	2.13
	5.6	7.20	7.12	7.06	7.00	2.02	2.02	2.02	2.02
	7.0	7.71	7.62	7.48	7.42	1.96	1.90	1.96	1.96
	11.1	8.00	7.91	7.85	7.79	1.79	1.78	1.77	1.77
	13.9	8.26	8.14	8.08	8.03	1.67	1.65	1.65	1.64
	16.7	8.52	8.40	8.34	8.29	1.55	1.53	1.52	1.51
	18.0	8.66	8.52	8.46	8.40	1.50	1.47	1.46	1.45

Note: The table shows the case where the operation frequency of a compressor is fixed.

30k									[SI_Unit]
INDOOR AIRFLOW (CMH)	HEATING PERFORMANCE AT INDOOR DRY BULB TEMPERATURE								
	OUTDOOR DB(°C)	TC:TOTAL CAPACITY IN KILOWATTS (KW)				PI:TOTAL POWER IN KILOWATTS (KW)			
		Indoor Conditions (DB °C)				Indoor Conditions (DB °C)			
		16.0	20.0	22.0	24.0	16.0	20.0	22.0	24.0
1500	-15.0	5.67	5.59	5.54	5.52	2.26	2.34	2.32	2.33
	-10.0	6.05	5.97	5.92	5.89	2.42	2.50	2.47	2.49
	-7.0	6.34	6.26	6.20	6.17	2.57	2.66	2.63	2.65
	-5.6	6.66	6.57	6.52	6.49	2.52	2.56	2.58	2.60
	-2.8	6.95	6.86	6.81	6.78	2.44	2.48	2.50	2.51
	0.0	7.15	7.07	7.01	6.98	2.36	2.39	2.41	2.42
	2.8	7.65	7.53	7.50	7.44	2.30	2.33	2.34	2.36
	5.6	8.40	8.28	8.22	8.17	2.24	2.27	2.28	2.29
	7.0	9.24	9.12	8.86	8.80	2.22	2.21	2.25	2.26
	11.1	9.76	9.64	9.55	9.49	2.11	2.13	2.14	2.15
	13.9	10.25	10.10	10.05	9.96	2.04	2.06	2.06	2.07
	16.7	10.71	10.57	10.51	10.42	1.97	1.98	1.99	1.99
	18.0	10.95	10.80	10.74	10.66	1.94	1.95	1.95	1.96
1800	-15.0	5.78	5.70	5.68	5.65	2.29	2.36	2.34	2.36
	-10.0	6.17	6.09	6.06	6.04	2.44	2.52	2.50	2.52
	-7.0	6.46	6.38	6.35	6.33	2.60	2.68	2.66	2.68
	-5.6	6.78	6.69	6.66	6.63	2.55	2.59	2.61	2.63
	-2.8	7.10	7.01	6.95	6.92	2.47	2.50	2.52	2.54
	0.0	7.30	7.21	7.15	7.10	2.38	2.41	2.43	2.45
	2.8	7.79	7.67	7.65	7.59	2.32	2.35	2.37	2.38
	5.6	8.57	8.46	8.40	8.34	2.26	2.29	2.30	2.31
	7.0	9.42	9.29	9.03	8.97	2.24	2.23	2.27	2.28
	11.1	9.93	9.81	9.76	9.67	2.13	2.15	2.16	2.17
	13.9	10.42	10.31	10.22	10.16	2.06	2.07	2.08	2.09
	16.7	10.92	10.77	10.71	10.63	1.99	2.00	2.01	2.01
	18.0	11.18	11.00	10.95	10.86	1.95	1.96	1.97	1.97
2100	-15.0	5.85	5.77	5.75	5.70	2.31	2.39	2.36	2.38
	-10.0	6.24	6.16	6.14	6.09	2.46	2.55	2.52	2.54
	-7.0	6.54	6.46	6.43	6.38	2.62	2.71	2.68	2.70
	-5.6	6.86	6.78	6.75	6.69	2.57	2.61	2.63	2.65
	-2.8	7.15	7.07	7.04	6.98	2.49	2.52	2.54	2.56
	0.0	7.38	7.27	7.24	7.18	2.40	2.44	2.45	2.47
	2.8	7.88	7.76	7.70	7.65	2.34	2.37	2.39	2.40
	5.6	8.63	8.54	8.49	8.43	2.28	2.31	2.32	2.33
	7.0	9.47	9.38	9.12	9.06	2.26	2.25	2.29	2.30
	11.1	10.05	9.90	9.84	9.76	2.15	2.17	2.18	2.19
	13.9	10.54	10.39	10.31	10.25	2.08	2.09	2.10	2.11
	16.7	11.03	10.86	10.80	10.71	2.00	2.02	2.02	2.03
	18.0	11.27	11.09	11.03	10.95	1.97	1.98	1.99	1.99

Note: The table shows the case where the operation frequency of a compressor is fixed.

36k+YDAX-100H-09M25									[SI_Unit]
INDOOR AIRFLOW (CMH)	HEATING PERFORMANCE AT INDOOR DRY BULB TEMPERATURE								
	OUTDOOR DB(°C)	TC:TOTAL CAPACITY IN KILOWATTS (KW)				PI:TOTAL POWER IN KILOWATTS (KW)			
		Indoor Conditions (DB °C)				Indoor Conditions (DB °C)			
		16.0	20.0	22.0	24.0	16.0	20.0	22.0	24.0
1500	-15.0	7.96	7.88	7.83	7.78	3.39	3.51	3.46	3.49
	-10.0	8.50	8.42	8.36	8.31	3.62	3.74	3.69	3.72
	-7.0	8.90	8.82	8.76	8.70	3.84	3.97	3.92	3.95
	-5.6	9.14	9.05	8.99	8.93	3.76	3.81	3.83	3.86
	-2.8	9.34	9.25	9.19	9.14	3.63	3.67	3.69	3.72
	0.0	9.45	9.34	9.28	9.22	3.49	3.53	3.55	3.57
	2.8	9.89	9.74	9.69	9.63	3.38	3.41	3.43	3.45
	5.6	10.67	10.53	10.47	10.38	3.27	3.30	3.31	3.33
	7.0	11.53	11.38	11.14	11.06	3.22	3.19	3.26	3.27
	11.1	12.01	11.84	11.75	11.69	3.04	3.05	3.06	3.07
	13.9	12.45	12.27	12.19	12.10	2.91	2.92	2.93	2.93
	16.7	12.88	12.71	12.62	12.51	2.79	2.79	2.80	2.80
	18.0	13.09	12.91	12.83	12.71	2.73	2.73	2.73	2.73
1800	-15.0	8.13	8.05	8.00	7.95	3.43	3.54	3.50	3.52
	-10.0	8.68	8.60	8.55	8.49	3.66	3.78	3.73	3.76
	-7.0	9.09	9.01	8.95	8.90	3.88	4.01	3.96	3.99
	-5.6	9.34	9.25	9.19	9.14	3.80	3.85	3.87	3.90
	-2.8	9.54	9.45	9.40	9.34	3.66	3.71	3.73	3.75
	0.0	9.66	9.54	9.45	9.40	3.52	3.56	3.58	3.60
	2.8	10.09	9.95	9.89	9.83	3.41	3.45	3.46	3.48
	5.6	10.88	10.73	10.67	10.61	3.30	3.33	3.34	3.36
	7.0	11.76	11.61	11.38	11.29	3.25	3.22	3.29	3.30
	11.1	12.25	12.07	12.01	11.93	3.07	3.08	3.09	3.10
	13.9	12.68	12.51	12.42	12.33	2.94	2.95	2.95	2.96
	16.7	13.15	12.94	12.86	12.77	2.81	2.82	2.82	2.82
	18.0	13.35	13.17	13.06	12.97	2.75	2.75	2.76	2.76
2100	-15.0	8.22	8.14	8.09	8.04	3.46	3.58	3.53	3.55
	-10.0	8.77	8.69	8.64	8.58	3.69	3.81	3.77	3.79
	-7.0	9.19	9.11	9.05	8.99	3.92	4.05	4.00	4.02
	-5.6	9.43	9.34	9.28	9.22	3.83	3.88	3.91	3.94
	-2.8	9.66	9.54	9.48	9.43	3.70	3.73	3.76	3.78
	0.0	9.74	9.63	9.57	9.51	3.55	3.59	3.61	3.63
	2.8	10.21	10.06	10.01	9.92	3.44	3.48	3.49	3.51
	5.6	10.99	10.85	10.79	10.70	3.33	3.36	3.37	3.39
	7.0	11.88	11.72	11.49	11.40	3.28	3.25	3.32	3.33
	11.1	12.36	12.22	12.13	12.04	3.09	3.11	3.12	3.13
	13.9	12.83	12.65	12.56	12.48	2.97	2.98	2.98	2.99
	16.7	13.26	13.09	13.00	12.88	2.84	2.84	2.85	2.85
	18.0	13.49	13.29	13.20	13.09	2.78	2.78	2.78	2.78

Note: The table shows the case where the operation frequency of a compressor is fixed.

36k+YDAX-100H-09T35									[SI_Unit]
INDOOR AIRFLOW (CMH)	HEATING PERFORMANCE AT INDOOR DRY BULB TEMPERATURE								
	OUTDOOR DB(°C)	TC:TOTAL CAPACITY IN KILOWATTS (KW)				PI:TOTAL POWER IN KILOWATTS (KW)			
		Indoor Conditions (DB °C)				Indoor Conditions (DB °C)			
		16.0	20.0	22.0	24.0	16.0	20.0	22.0	24.0
1500	-15.0	8.07	7.97	7.95	7.90	3.41	3.52	3.48	3.50
	-10.0	8.62	8.51	8.49	8.43	3.63	3.76	3.71	3.73
	-7.0	9.03	8.92	8.89	8.83	3.86	3.99	3.94	3.96
	-5.6	9.24	9.12	9.09	9.03	3.77	3.82	3.85	3.88
	-2.8	9.41	9.32	9.27	9.21	3.63	3.68	3.70	3.72
	0.0	9.50	9.38	9.32	9.27	3.50	3.54	3.56	3.56
	2.8	9.93	9.79	9.73	9.67	3.39	3.42	3.44	3.45
	5.6	10.69	10.54	10.49	10.43	3.27	3.30	3.31	3.33
	7.0	11.53	11.38	11.14	11.08	3.22	3.19	3.26	3.27
	11.1	11.98	11.84	11.75	11.67	3.04	3.05	3.06	3.07
	13.9	12.42	12.25	12.16	12.07	2.91	2.92	2.92	2.93
	16.7	12.86	12.65	12.56	12.48	2.78	2.78	2.79	2.79
	18.0	13.06	12.86	12.77	12.68	2.72	2.72	2.72	2.72
1800	-15.0	8.21	8.13	8.08	8.03	3.44	3.56	3.51	3.53
	-10.0	8.76	8.68	8.63	8.58	3.67	3.79	3.75	3.77
	-7.0	9.18	9.10	9.04	8.98	3.90	4.03	3.98	4.00
	-5.6	9.41	9.32	9.27	9.21	3.81	3.86	3.89	3.91
	-2.8	9.61	9.50	9.44	9.38	3.67	3.71	3.73	3.76
	0.0	9.70	9.59	9.53	9.47	3.53	3.56	3.58	3.60
	2.8	10.14	9.99	9.93	9.88	3.42	3.45	3.47	3.48
	5.6	10.92	10.78	10.69	10.63	3.31	3.33	3.35	3.36
	7.0	11.76	11.61	11.38	11.29	3.26	3.22	3.29	3.30
	11.1	12.25	12.07	11.98	11.90	3.06	3.08	3.09	3.09
	13.9	12.68	12.51	12.42	12.33	2.94	2.94	2.95	2.95
	16.7	13.12	12.91	12.83	12.74	2.81	2.81	2.81	2.81
	18.0	13.32	13.12	13.03	12.94	2.74	2.74	2.74	2.74
2100	-15.0	8.28	8.21	8.15	8.10	3.47	3.59	3.55	3.56
	-10.0	8.84	8.76	8.71	8.65	3.70	3.83	3.78	3.80
	-7.0	9.26	9.18	9.12	9.07	3.93	4.07	4.02	4.04
	-5.6	9.50	9.41	9.35	9.30	3.85	3.90	3.93	3.95
	-2.8	9.70	9.59	9.53	9.47	3.70	3.75	3.77	3.79
	0.0	9.79	9.67	9.61	9.56	3.56	3.59	3.61	3.63
	2.8	10.22	10.11	10.02	9.96	3.45	3.48	3.50	3.52
	5.6	11.04	10.89	10.81	10.75	3.34	3.36	3.38	3.39
	7.0	11.88	11.72	11.49	11.40	3.29	3.25	3.32	3.33
	11.1	12.36	12.19	12.10	12.04	3.09	3.11	3.11	3.12
	13.9	12.80	12.62	12.54	12.45	2.96	2.97	2.98	2.98
	16.7	13.23	13.06	12.97	12.86	2.83	2.83	2.84	2.84
	18.0	13.46	13.26	13.17	13.06	2.77	2.77	2.77	2.77

Note: The table shows the case where the operation frequency of a compressor is fixed.

42k									[SI_Unit]
INDOOR AIRFLOW (CMH)	HEATING PERFORMANCE AT INDOOR DRY BULB TEMPERATURE								
	OUTDOOR DB(°C)	TC:TOTAL CAPACITY IN KILOWATTS (KW)				PI:TOTAL POWER IN KILOWATTS (KW)			
		Indoor Conditions (DB °C)				Indoor Conditions (DB °C)			
		16.0	20.0	22.0	24.0	16.0	20.0	22.0	24.0
1680	-15.0	8.49	8.39	8.34	8.29	3.38	3.50	3.47	3.50
	-10.0	9.07	8.96	8.91	8.86	3.61	3.73	3.70	3.73
	-7.0	9.50	9.39	9.33	9.28	3.83	3.96	3.93	3.96
	-5.6	9.88	9.76	9.71	9.65	3.77	3.83	3.86	3.89
	-2.8	10.26	10.11	10.05	10.00	3.67	3.72	3.75	3.77
	0.0	10.49	10.34	10.29	10.23	3.56	3.61	3.64	3.67
	2.8	11.13	10.98	10.89	10.81	3.49	3.54	3.56	3.59
	5.6	12.14	11.97	11.91	11.82	3.41	3.46	3.48	3.50
	7.0	13.27	13.08	12.76	12.67	3.38	3.39	3.45	3.47
	11.1	13.92	13.74	13.66	13.57	3.25	3.28	3.30	3.32
	13.9	14.55	14.35	14.26	14.15	3.15	3.19	3.20	3.22
	16.7	15.19	14.99	14.87	14.76	3.06	3.09	3.11	3.12
	18.0	15.48	15.28	15.16	15.05	3.02	3.05	3.06	3.07
2040	-15.0	8.65	8.55	8.50	8.45	3.42	3.53	3.51	3.53
	-10.0	9.24	9.13	9.08	9.03	3.65	3.77	3.74	3.77
	-7.0	9.68	9.57	9.51	9.46	3.87	4.00	3.97	4.00
	-5.6	10.08	9.97	9.91	9.85	3.81	3.87	3.90	3.93
	-2.8	10.46	10.32	10.26	10.20	3.71	3.75	3.78	3.81
	0.0	10.69	10.55	10.49	10.40	3.59	3.65	3.68	3.70
	2.8	11.33	11.18	11.10	11.04	3.52	3.57	3.59	3.62
	5.6	12.37	12.23	12.14	12.05	3.44	3.49	3.51	3.53
	7.0	13.49	13.34	12.99	12.90	3.41	3.42	3.48	3.50
	11.1	14.21	14.00	13.92	13.83	3.27	3.31	3.33	3.35
	13.9	14.84	14.64	14.55	14.44	3.18	3.21	3.23	3.25
	16.7	15.48	15.28	15.16	15.08	3.09	3.12	3.13	3.14
	18.0	15.80	15.57	15.48	15.37	3.04	3.07	3.08	3.10
2400	-15.0	8.75	8.65	8.60	8.55	3.45	3.57	3.54	3.57
	-10.0	9.34	9.24	9.18	9.13	3.68	3.80	3.78	3.80
	-7.0	9.79	9.68	9.62	9.57	3.91	4.04	4.01	4.04
	-5.6	10.20	10.08	10.03	9.97	3.84	3.91	3.94	3.97
	-2.8	10.58	10.43	10.37	10.32	3.73	3.79	3.82	3.85
	0.0	10.81	10.66	10.61	10.52	3.63	3.68	3.71	3.73
	2.8	11.47	11.30	11.24	11.16	3.55	3.60	3.63	3.65
	5.6	12.52	12.34	12.26	12.17	3.47	3.52	3.54	3.57
	7.0	13.67	13.48	13.13	13.05	3.44	3.45	3.51	3.53
	11.1	14.35	14.18	14.06	13.97	3.30	3.34	3.36	3.38
	13.9	15.02	14.82	14.70	14.61	3.21	3.24	3.26	3.27
	16.7	15.66	15.45	15.34	15.22	3.11	3.14	3.16	3.17
	18.0	15.98	15.74	15.63	15.51	3.07	3.09	3.11	3.12

Note: The table shows the case where the operation frequency of a compressor is fixed.

48k									[SI_Unit]
INDOOR AIRFLOW (CMH)	HEATING PERFORMANCE AT INDOOR DRY BULB TEMPERATURE								
	OUTDOOR DB(°C)	TC:TOTAL CAPACITY IN KILOWATTS (KW)				PI:TOTAL POWER IN KILOWATTS (KW)			
		Indoor Conditions (DB °C)				Indoor Conditions (DB °C)			
		16.0	20.0	22.0	24.0	16.0	20.0	22.0	24.0
1680	-15.0	11.29	11.19	11.11	11.06	4.62	4.77	4.72	4.76
	-10.0	12.06	11.95	11.87	11.81	4.92	5.09	5.03	5.07
	-7.0	12.63	12.52	12.43	12.37	5.23	5.41	5.35	5.39
	-5.6	12.89	12.78	12.69	12.63	5.13	5.20	5.24	5.27
	-2.8	13.13	12.98	12.89	12.83	4.95	5.01	5.05	5.08
	0.0	13.18	13.04	12.95	12.86	4.78	4.83	4.86	4.89
	2.8	13.74	13.56	13.47	13.39	4.64	4.69	4.72	4.75
	5.6	14.75	14.55	14.46	14.37	4.51	4.55	4.57	4.60
	7.0	15.85	15.63	15.34	15.22	4.44	4.41	4.50	4.52
	11.1	16.44	16.21	16.09	15.97	4.21	4.24	4.25	4.26
	13.9	16.96	16.73	16.61	16.50	4.05	4.07	4.08	4.09
	16.7	17.51	17.25	17.13	17.02	3.90	3.92	3.92	3.93
	18.0	17.77	17.51	17.40	17.25	3.83	3.84	3.84	3.85
2040	-15.0	11.52	11.42	11.34	11.29	4.67	4.82	4.76	4.80
	-10.0	12.30	12.19	12.11	12.06	4.98	5.14	5.08	5.12
	-7.0	12.89	12.77	12.69	12.63	5.29	5.47	5.40	5.44
	-5.6	13.15	13.04	12.95	12.89	5.18	5.26	5.29	5.33
	-2.8	13.39	13.24	13.15	13.10	5.00	5.07	5.10	5.13
	0.0	13.47	13.30	13.21	13.13	4.82	4.88	4.90	4.93
	2.8	14.03	13.85	13.74	13.65	4.69	4.74	4.77	4.78
	5.6	15.04	14.87	14.75	14.66	4.55	4.59	4.62	4.64
	7.0	16.13	15.95	15.66	15.54	4.48	4.45	4.54	4.56
	11.1	16.76	16.55	16.44	16.32	4.24	4.27	4.29	4.30
	13.9	17.31	17.08	16.96	16.84	4.08	4.10	4.12	4.13
	16.7	17.86	17.60	17.48	17.37	3.93	3.95	3.95	3.96
	18.0	18.12	17.86	17.74	17.60	3.86	3.87	3.87	3.88
2400	-15.0	11.65	11.53	11.45	11.40	4.71	4.87	4.82	4.85
	-10.0	12.44	12.31	12.23	12.17	5.03	5.19	5.14	5.17
	-7.0	13.04	12.89	12.81	12.75	5.34	5.52	5.46	5.50
	-5.6	13.30	13.15	13.07	13.01	5.23	5.31	5.34	5.38
	-2.8	13.53	13.39	13.30	13.21	5.05	5.12	5.15	5.18
	0.0	13.62	13.44	13.36	13.27	4.86	4.92	4.96	4.99
	2.8	14.17	14.00	13.88	13.79	4.74	4.78	4.81	4.83
	5.6	15.22	15.01	14.93	14.81	4.60	4.64	4.67	4.69
	7.0	16.34	16.12	15.80	15.71	4.53	4.50	4.59	4.61
	11.1	16.96	16.73	16.61	16.50	4.29	4.32	4.34	4.35
	13.9	17.51	17.28	17.13	17.02	4.13	4.15	4.17	4.18
	16.7	18.06	17.80	17.69	17.57	3.98	4.00	4.00	4.01
	18.0	18.35	18.06	17.95	17.80	3.90	3.92	3.92	3.93

Note: The table shows the case where the operation frequency of a compressor is fixed.

55k									[SI_Unit]
INDOOR AIRFLOW (CMH)	HEATING PERFORMANCE AT INDOOR DRY BULB TEMPERATURE								
	OUTDOOR DB(°C)	TC:TOTAL CAPACITY IN KILOWATTS (KW)				PI:TOTAL POWER IN KILOWATTS (KW)			
		Indoor Conditions (DB °C)				Indoor Conditions (DB °C)			
		16.0	20.0	22.0	24.0	16.0	20.0	22.0	24.0
1820	-15.0	11.65	11.53	11.45	11.38	4.82	4.97	4.96	5.00
	-10.0	12.44	12.31	12.23	12.15	5.14	5.30	5.29	5.33
	-7.0	13.03	12.89	12.81	12.73	5.46	5.64	5.62	5.67
	-5.6	13.53	13.39	13.30	13.21	5.39	5.49	5.54	5.59
	-2.8	14.00	13.82	13.74	13.65	5.27	5.37	5.41	5.46
	0.0	14.29	14.08	14.00	13.91	5.15	5.24	5.29	5.34
	2.8	15.10	14.90	14.78	14.69	5.08	5.17	5.22	5.26
	5.6	16.44	16.20	16.12	16.00	5.01	5.10	5.14	5.18
	7.0	17.90	17.65	17.21	17.10	4.99	5.05	5.12	5.16
	11.1	18.75	18.52	18.37	18.26	4.85	4.93	4.97	5.01
	13.9	19.56	19.30	19.19	19.04	4.76	4.83	4.87	4.91
	16.7	20.38	20.12	19.97	19.83	4.67	4.74	4.77	4.80
	18.0	20.78	20.49	20.35	20.20	4.63	4.69	4.72	4.76
2210	-15.0	11.88	11.75	11.68	11.60	4.86	5.02	5.00	5.04
	-10.0	12.69	12.55	12.47	12.39	5.18	5.36	5.33	5.38
	-7.0	13.29	13.15	13.07	12.98	5.51	5.69	5.67	5.72
	-5.6	13.79	13.65	13.56	13.47	5.44	5.54	5.59	5.64
	-2.8	14.26	14.08	14.00	13.91	5.32	5.42	5.47	5.52
	0.0	14.55	14.37	14.29	14.17	5.20	5.29	5.34	5.39
	2.8	15.39	15.19	15.07	14.98	5.13	5.22	5.27	5.31
	5.6	16.76	16.52	16.44	16.32	5.06	5.15	5.19	5.24
	7.0	18.25	18.00	17.56	17.45	5.04	5.10	5.17	5.21
	11.1	19.13	18.87	18.75	18.64	4.90	4.98	5.02	5.06
	13.9	19.97	19.68	19.56	19.42	4.81	4.88	4.92	4.95
	16.7	20.78	20.49	20.35	20.20	4.72	4.78	4.82	4.85
	18.0	21.19	20.90	20.75	20.61	4.67	4.74	4.77	4.80
2600	-15.0	12.01	11.86	11.79	11.74	4.91	5.07	5.05	5.10
	-10.0	12.83	12.67	12.59	12.53	5.24	5.41	5.39	5.44
	-7.0	13.44	13.27	13.19	13.13	5.57	5.75	5.73	5.77
	-5.6	13.94	13.76	13.68	13.62	5.49	5.60	5.65	5.70
	-2.8	14.40	14.23	14.14	14.06	5.37	5.47	5.52	5.57
	0.0	14.69	14.52	14.40	14.32	5.25	5.35	5.39	5.44
	2.8	15.54	15.33	15.22	15.13	5.18	5.27	5.32	5.36
	5.6	16.93	16.70	16.58	16.47	5.11	5.20	5.24	5.29
	7.0	18.42	18.17	17.74	17.62	5.09	5.15	5.22	5.26
	11.1	19.30	19.07	18.93	18.81	4.95	5.03	5.07	5.11
	13.9	20.15	19.88	19.74	19.62	4.86	4.93	4.97	5.00
	16.7	20.99	20.70	20.55	20.41	4.76	4.83	4.87	4.90
	18.0	21.39	21.10	20.96	20.81	4.72	4.78	4.82	4.85

Note: The table shows the case where the operation frequency of a compressor is fixed.

8. Noise Criterion Curves

8.1 Indoor Unit

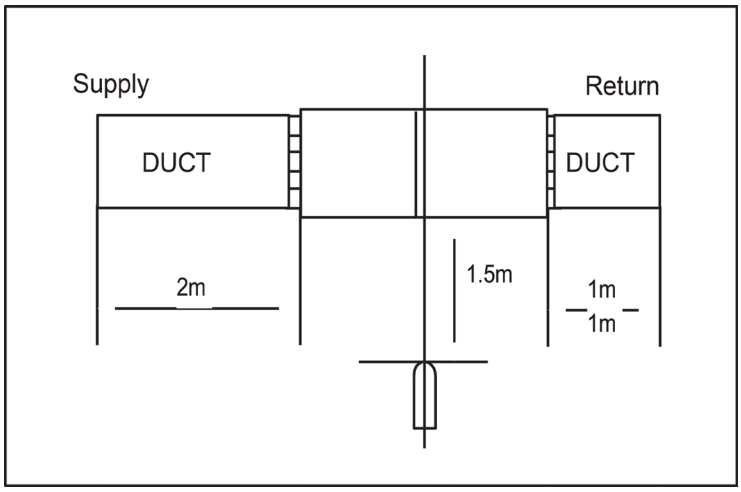

Notes:

-Sound measured at 1.5m away from the center of the unit.

-Data is valid at free field condition

-Data is valid at nominal operation condition

-Reference acoustic pressure OdB = 20μPa

-Sound level will vary depending on a range of factors such as the construction -(acoustic absorption coefficient) of particular room in which the equipment is installed.

-The operating conditions are assumed to be standard.

12k

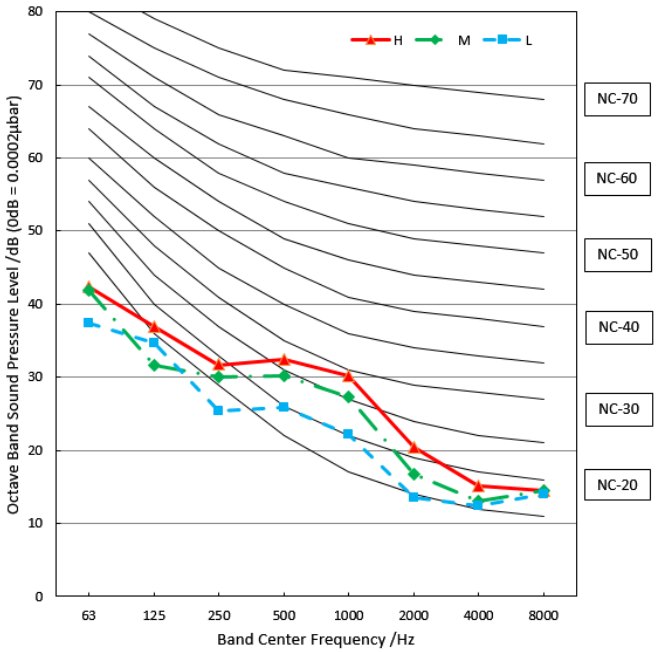

18k

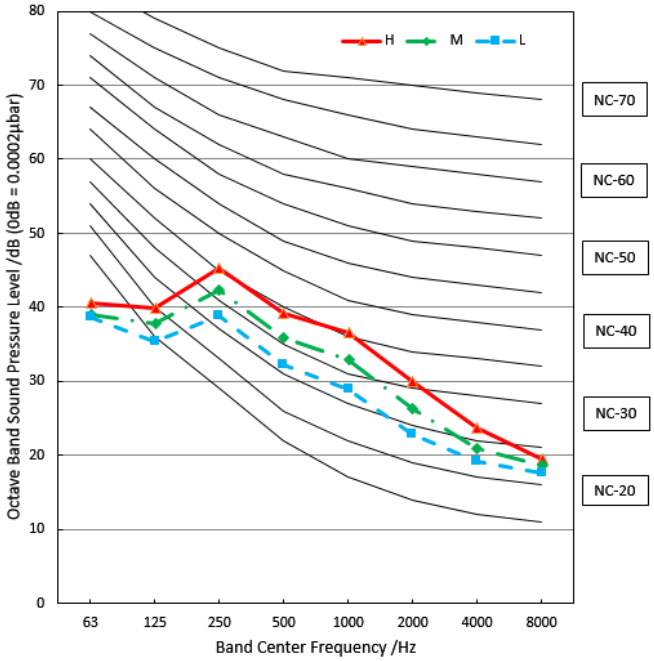

24k

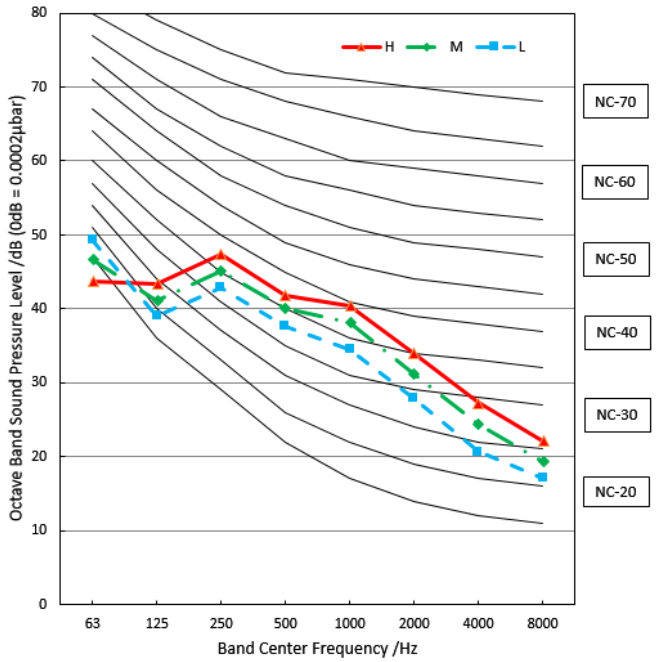

30k

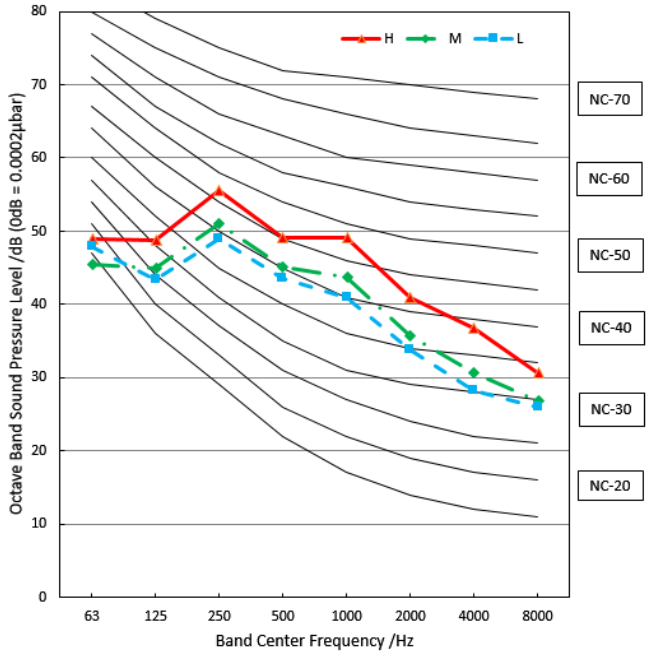

36k

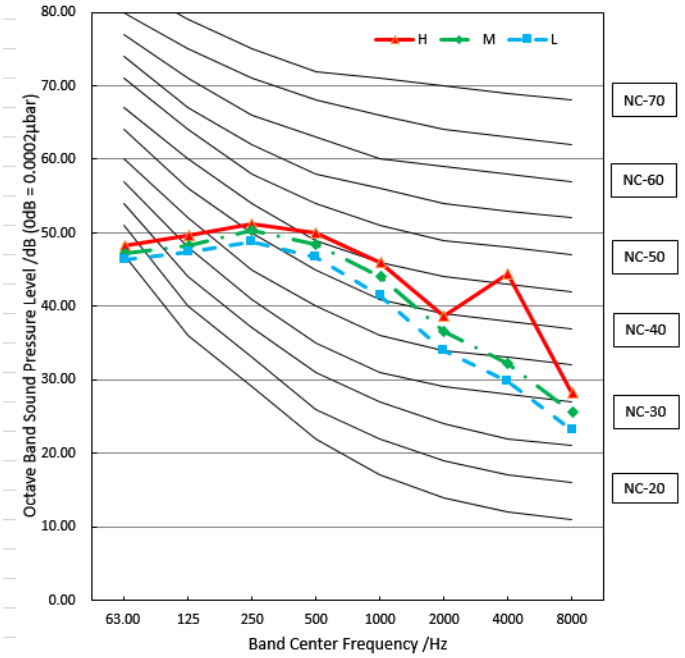

42k

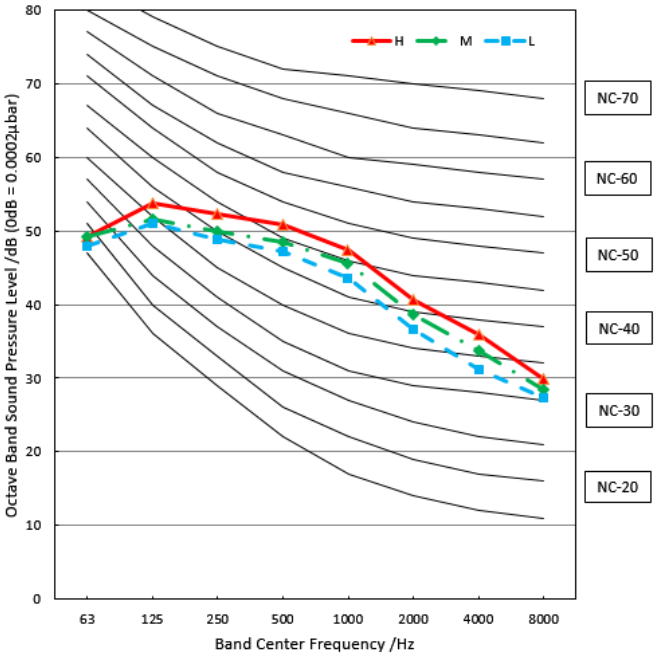

48k

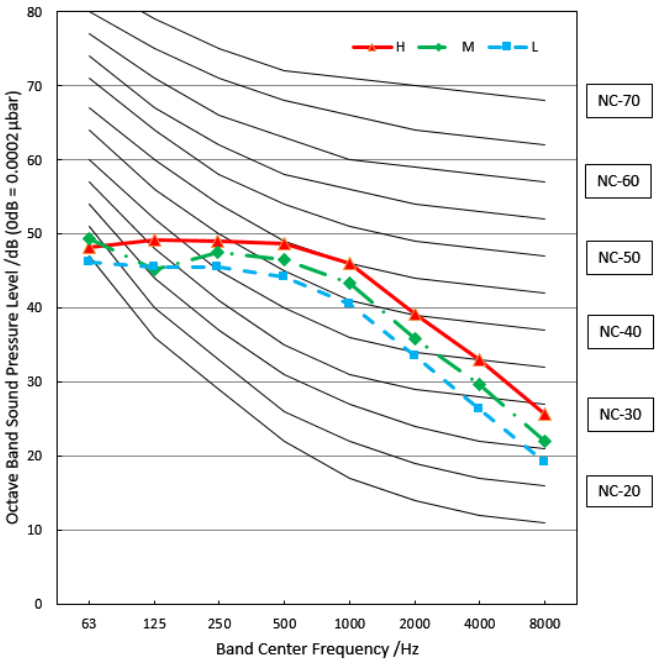

55k

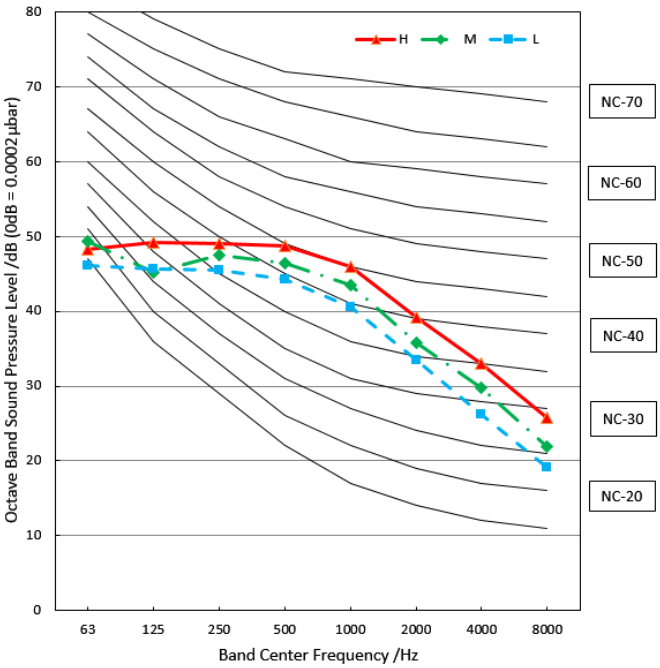

9. Electrical Characteristics

Capacity (Btu/h)		12k~18k	24k	30k	36k
OUDOOR UNIT POWER	Phase	1-phase	1-phase	1-phase	1-phase
	Frequency and Voltage	220-240V, 50Hz	220-240V, 50Hz	220-240V, 50Hz	220-240V, 50Hz
	Power Wiring (mm^2)	3×1.5	3×2.5	3×2.5	3×4.0
	Circuit Breaker/ Fuse (A)	25/20	25/20	50/40	50/40
Indoor/Outdoor Connecting Wiring	Weak Electric Signal)(mm^2)				
	Strong Electric Signal(mm^2)	4×1.0	4×1.0	4×1.0	4×1.0

Capacity (Btu/h)		36k	42k	48~55k
OUDOOR UNIT POWER	Phase	3-phase	1-phase	3-phase
	Frequency and Voltage	380-415V, 50Hz	220-240V, 50Hz	380-415V, 50Hz
	Power Wiring (mm^2)	5×2.5	3×4.0	5×2.5
	Circuit Breaker/ Fuse (A)	25/20	50/40	32/25
Indoor/Outdoor Connecting Wiring	Weak Electric Signal) (mm^2)			
	Strong Electric Signal(mm^2)	4×1.0	3×1.0	4×1.0

10. Electrical Wiring Diagrams

IDU Capacity (Btu/h)	IDU Wiring Diagram
12k~55k	16023000008817

Abbreviation	Paraphrase
Y/G	Yellow-Green Conductor
CAP	Indoor Fan Capacitor
AC FAN	Alternating Current Fan
DC FAN	Direct Current FAN
PUMP	PUMP
L	LIVE
N	NEUTRAL
TO CCM Comm.Bus	Central Controller
T1	Indoor Room Temperature
T2	Coil Temperature of Indoor Heat Exchanger
P1	Super High Speed
P2	High Speed

Indoor unit wiring diagram: 16023000008817

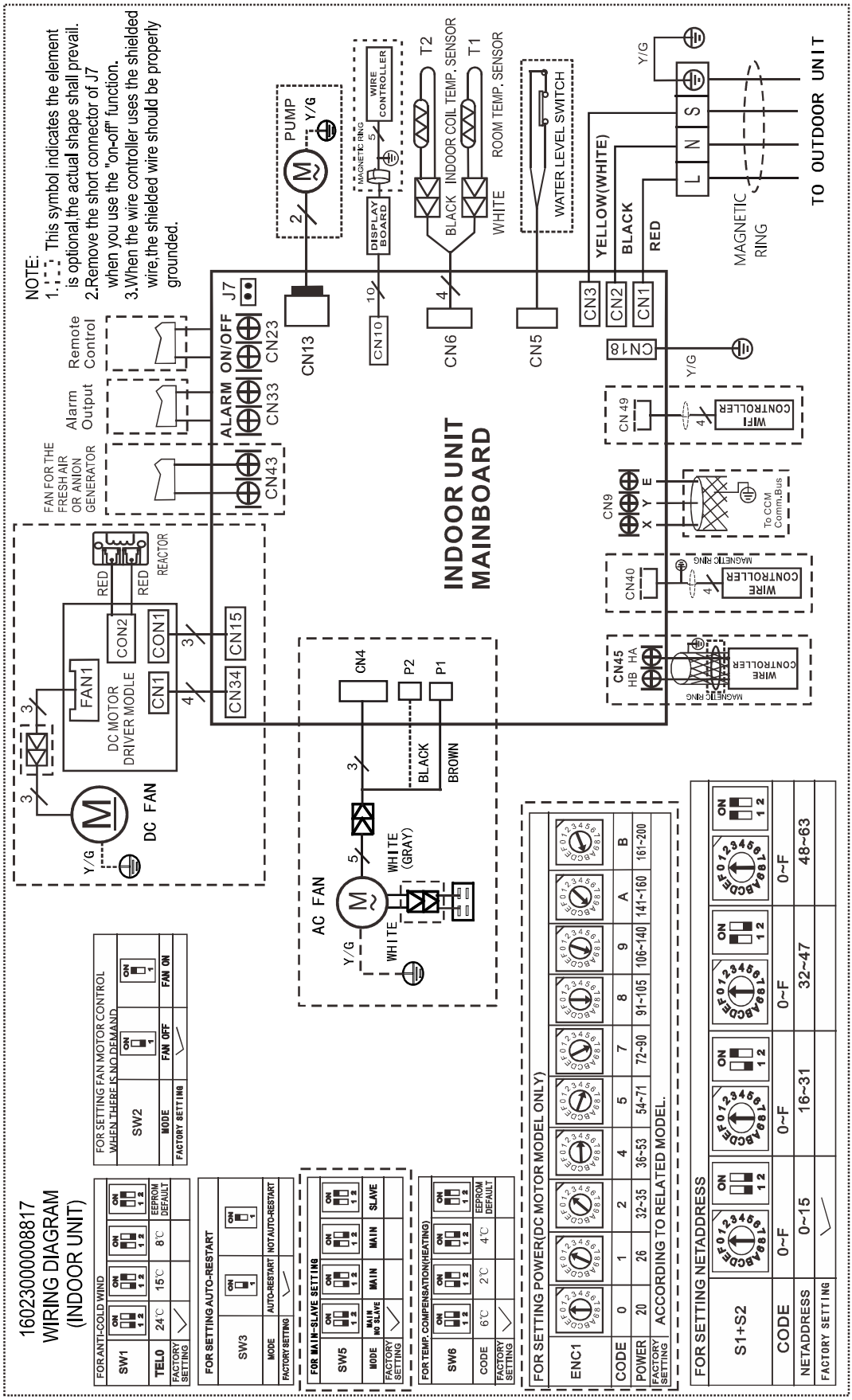

10.1 Some connectors introduce:

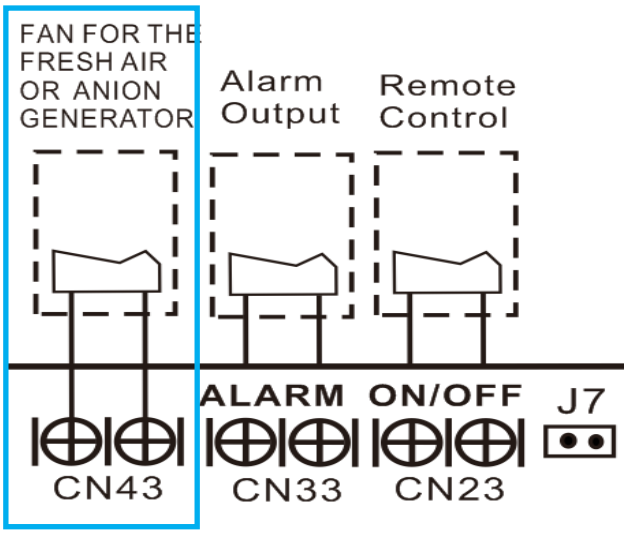

A. For new fresh motor terminal port (also for Anion generator) CN43:
1. Connect the fan motor to the port, no need care L/N of the motor;
2. The output voltage is the power supply;
3. The fresh motor can not excess 200W or 1A, follow the smaller one;
4. The new fresh motor will be worked when the indoor fan motor work ;when the indoor fan motor stops , the new fresh motor would be stopped;
5. When the unit enters force cooling mode or capacity testing mode , the fresh motor isn't work.

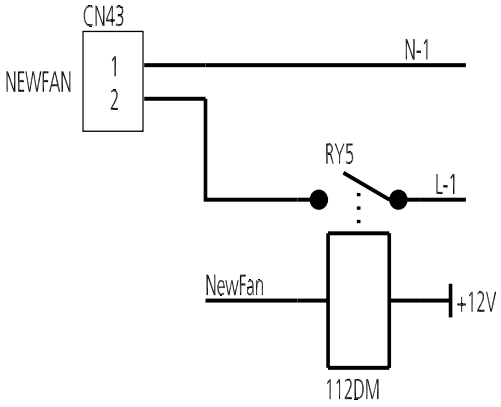

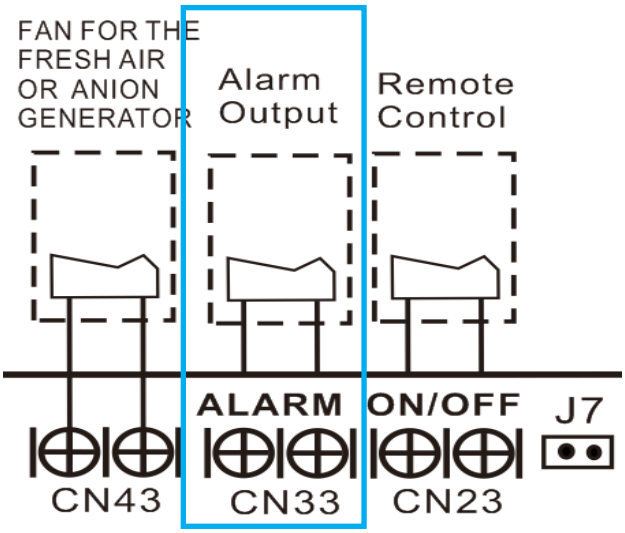

B For ALARM terminal port CN33

1. Provide the terminal port to connect ALARM, but no voltage of the terminal port, the power from the ALARM system (not from the unit);
2. Although design voltage can support higher voltage, but we strongly ask you connect the power less than 24V, current less than 0.5A;
3. When the unit occurs the problem, the relay would be closed, then ALARM works.

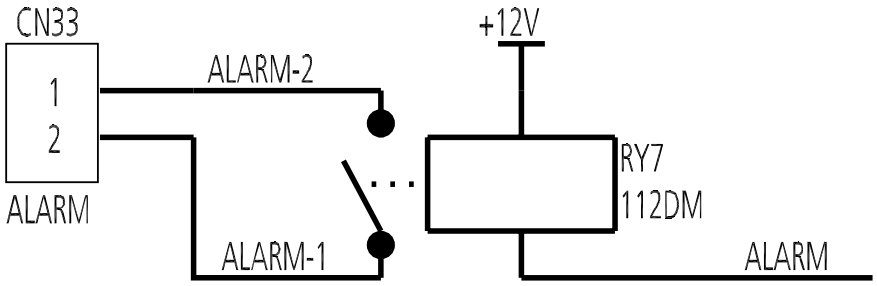

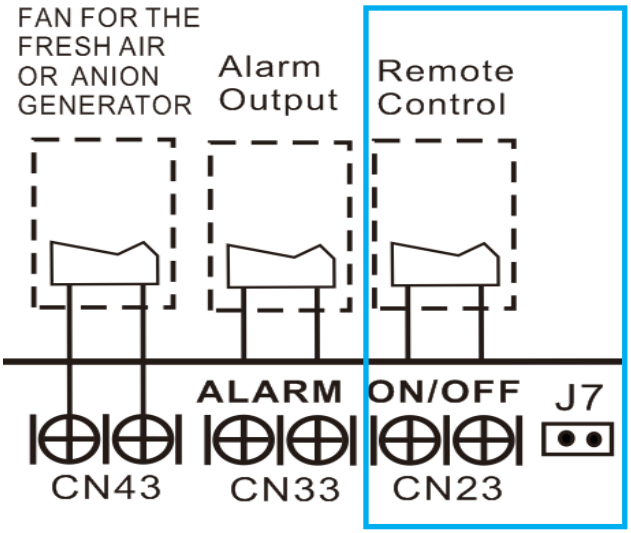

C. For remote control (ON-OFF) terminal port CN23 and short connector of J7

1. Remove the short connector of J7 when you use ON-OFF function;
2. When remote switch off (OPEN); the unit would be off;
3. When remote switch on (CLOSE); the unit would be on;
4. When close/open the remote switch, the unit would be responded the demand within 2 seconds;
5. When the remote switch on, you can use remote controller/ wire controller to select the mode what you want; when the remote switch off, the unit would not respond the demand from remote controller/wire controller.

when the remote switch off, but the remote controller/wire controller are on, CP code would be shown on the display board.

6. The voltage of the port is 12V DC, design Max. current is 5mA.

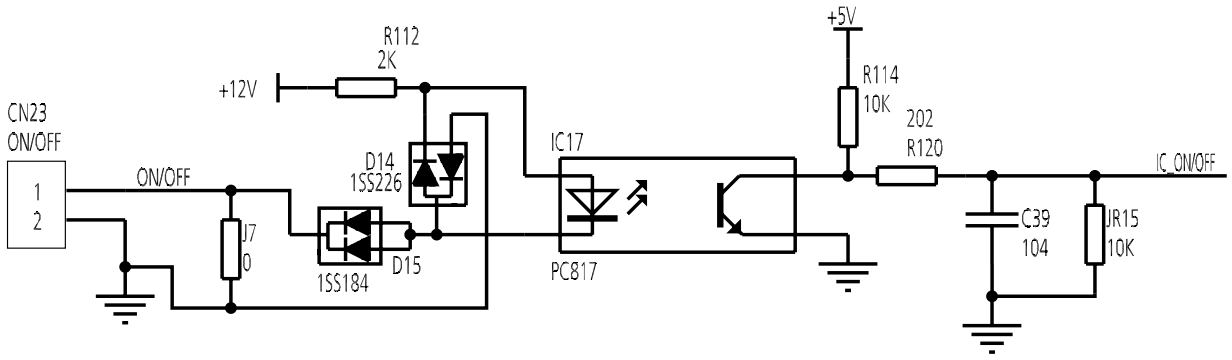

10.2 Micro-Switch Introduce:

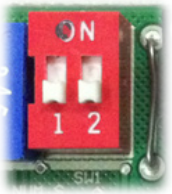

FOR ANTI-COLD WIND				
SW1	ON 1 2	ON 1 2	ON 1 2	ON 1 2
TEL0	24℃	15℃	8℃	EEPROM DEFAULT
FACTORY SETTING	✓			

A. Micro-switch SW1 is for selection of indoor fan stop temperature (TEL0) when it is in anti-cold wind action in heating mode.

Range: 24°C, 15°C, 8°C, according to EEROM setting (reserved for special customizing).

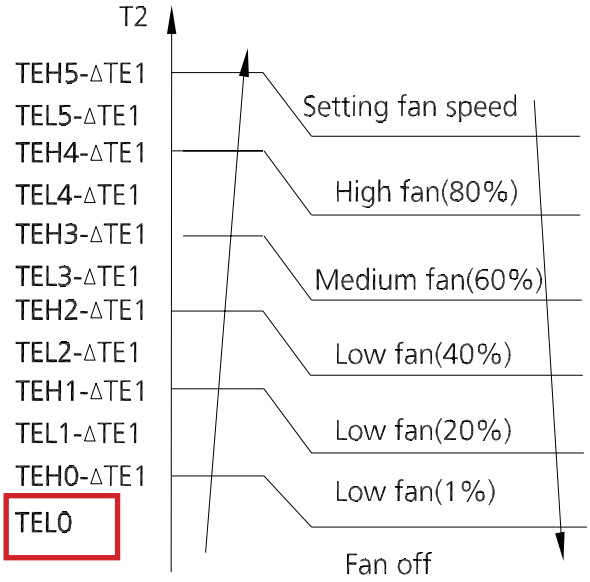



FOR SETTING FAN MOTOR CONTROL WHEN THERE IS NO DEMAND		
SW2	ON 1	ON 1
MODE	FAN OFF	FAN ON
FACTORY SETTING	✓	

B. Micro-switch SW2 is for selection of indoor FAN ACTION if room temperature reaches the set point and the compressor stops.

Range: OFF (in 127s), Keep running.



FOR SETTING AUTO-RESTART		
SW3	ON 1	ON 1
MODE	AUTO-RESTART	NOT AUTO-RESTART
FACTORY SETTING	✓	

C. Micro-switch SW3 is for selection of auto-restart function.

Range: Active, inactive



FOR TEMP. COMPENSATION(HEATING)				
SW6	ON 1 2	ON 1 2	ON 1 2	ON 1 2
CODE	6℃	2℃	4℃	EEPROM DEFAULT
FACTORY SETTING	✓			

D. Micro-switch SW6 is for selection of temperature compensation in heating mode. This helps to reduce the real temperature difference between ceiling and floor so that the unit could run properly. If the height of installation is lower, smaller value could be chosen.

Range: 6°C, 4°C, 2°C, E function (reserved for special customizing)

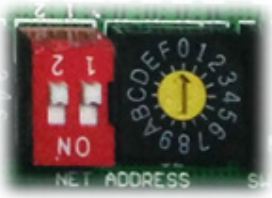

FOR SETTING NETADDRESS				
S1+S2	ON 1 2	ON 1 2	ON 1 2	ON 1 2
CODE	0~F	0~F	0~F	0~F
NETADDRESS	0~15	16~31	32~47	48~63
FACTORY SETTING	✓			

E. Micro-switch S1 and dial-switch S2 are for address setting when you want to control this unit by a central controller.

Range: 00-63

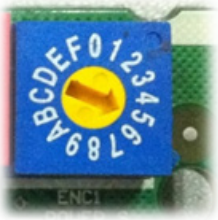

FOR SETTING POWER(DC MOTOR MODEL ONLY)										
ENC1										
CODE	0	1	2	4	5	7	8	9	A	B
POWER	20	26	32~35	36~53	54~71	72~90	91~105	106~140	141~160	161~200
FACTORY SETTING	ACCORDING TO RELATED MODEL.									

F. Dial-switch ENC1: The indoor PCB is universal designed for whole series units from 7K to 68K. This ENC1 setting will tell the main program what size the unit is.

NOTE: Usually there is glue on it because the switch position cannot be changed at random unless you want to use this PCB as a spare part to use in another unit. Then you have to select the right position to match the size of the unit.

“20” means 2kW (7K),“105” means 10.5kW(36K), and so on.



FOR MAIN-SLAVE SETTING				
SW5	ON 1 2	ON 1 2	ON 1 2	ON 1 2
MODE	MAIN NO SLAVE	MAIN	MAIN	SLAVE
FACTORY SETTING	✓			

G. Micro-switch SW5 is for setting the master or slave unit when the unit is in twin connection.

Range: Master no slave (Normal 1 drive 1 connection), Master (2 positions without difference), Slave

Indoor Unit-Floor Ceiling

Contents

1. Feature....2
2. Dimensional Drawings....3
3. Part names....4
4. Service Place....5
5. Accessories....6
6 Air Velocity and Temperature Distributions....7
7. Capacity Tables....63
8. Noise Criterion Curves....81
9. Electrical Characteristics....83
10. Electrical Wiring Diagrams....84

1. Feature

1.1 Easy installation-2 Style Installation

- Fashionable design and streamline appearance, suitable for different room style.

1.2 3D Airflow

- Vertical air flow and horizontal airflow can be adjusted by remote controllerto direct air flow to every corner of the room.

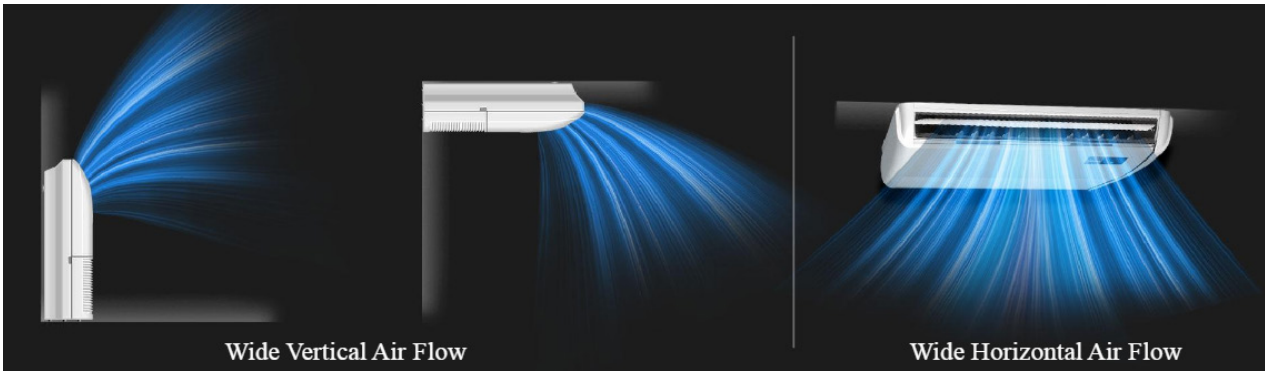

1.3 Easy Maintenance-Universal Spare Parts

- More than 60% parts and assemblies (such as fan wheel,plastic cases, metal parts etc.) are universal for 3 different bodies, which makes maintenance much easier.

1.4 Fresh Air

- Fresh air intake function brings you fresh and comfortable air feeling.

1.5 Healthy Filters(Optional)

- Varies of healthy filters can be chosen to fix on the machine.

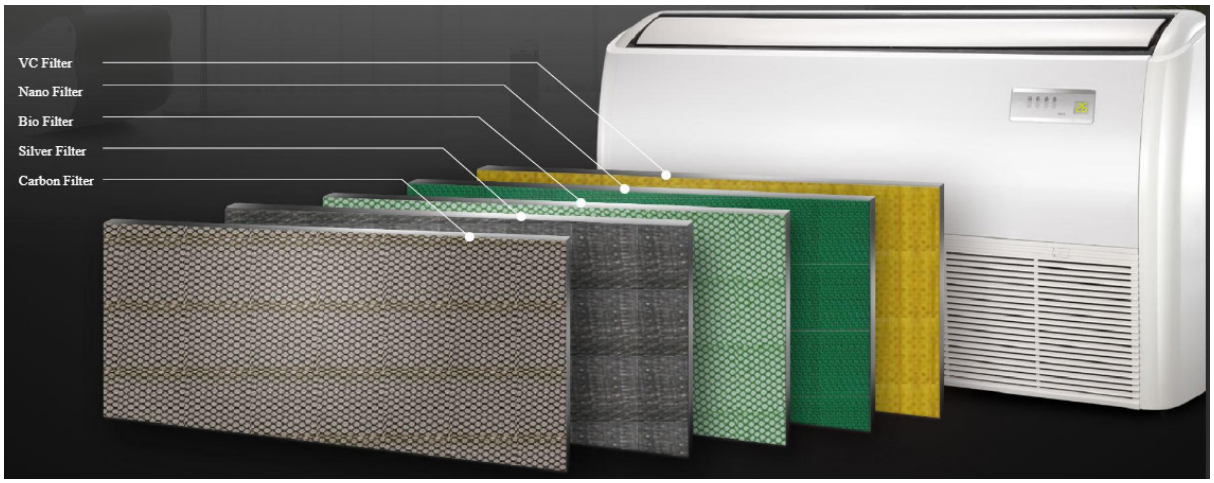

2. Dimensional Drawings

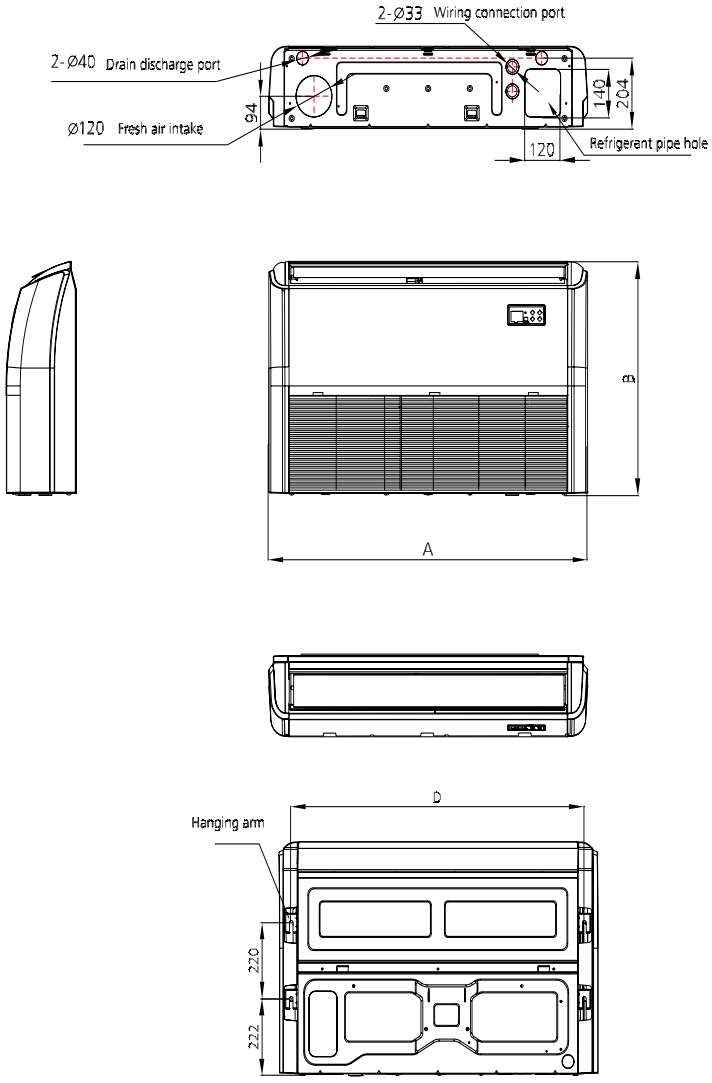

Model (KBtu/h)	Unit	A	B	C	D
18-24	mm	1068	675	235	983
	inch	42.05	26.57	9.25	38.7
36-60	mm	1650	675	235	1565
	inch	64.96	26.57	9.25	61.61

3. Part names

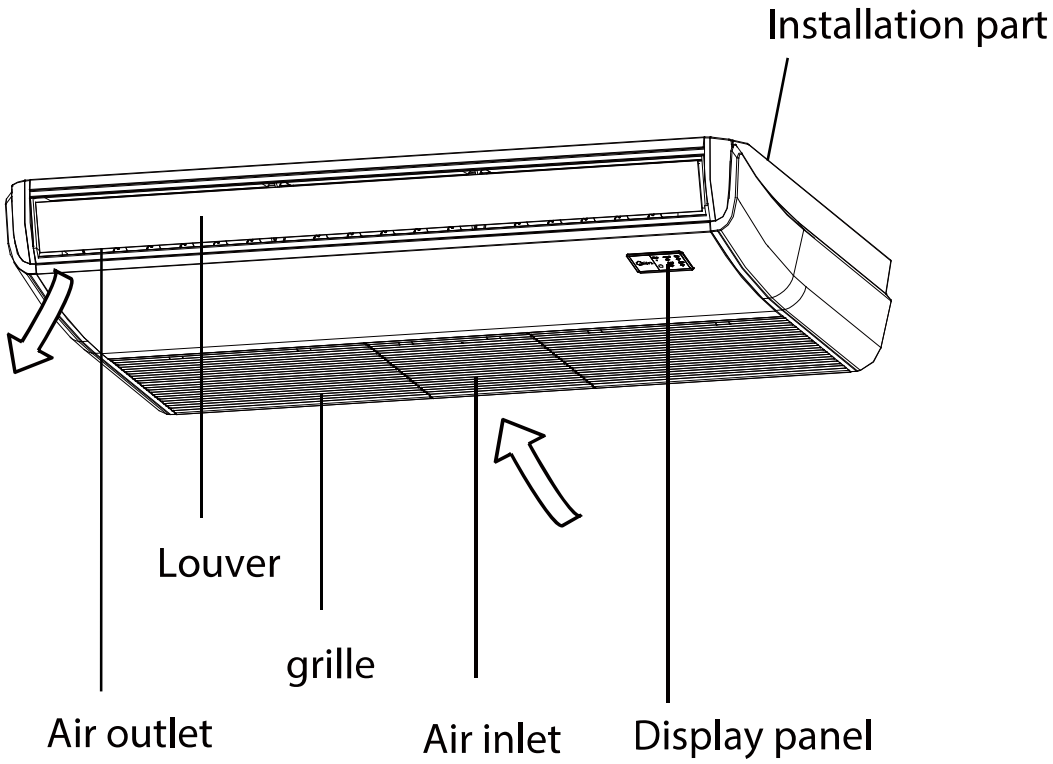
Installation part
Louver
grille
Air outlet
Air inlet
Display panel

4. Service Place

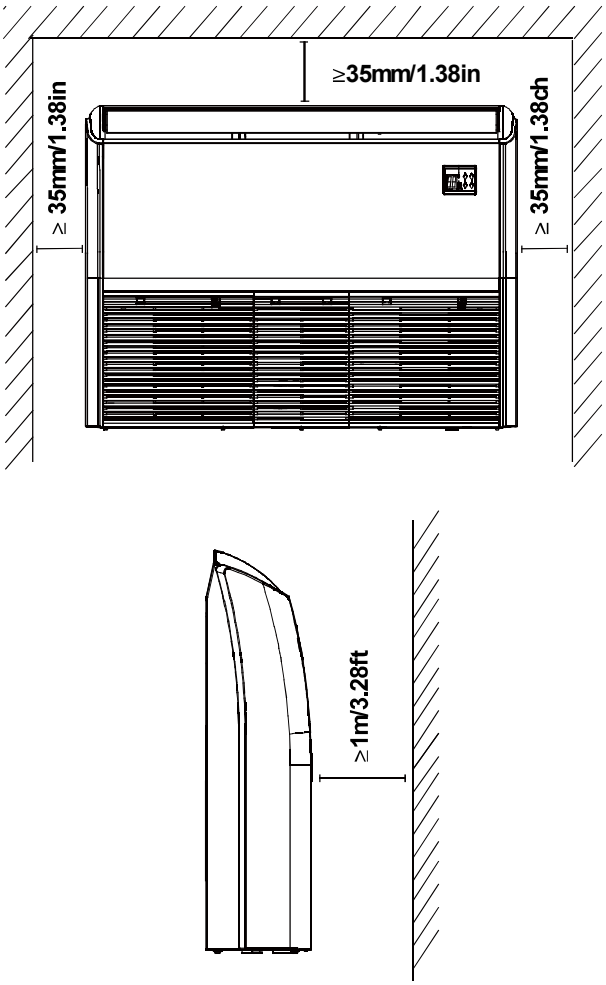

5. Accessories

The air conditioning system comes with the following accessories. Use all of the installation parts and accessories to install the air conditioner. Improper installation may result in water leakage, electrical shock and fire, or equipment failure.

	Name	Shape	Quantity
Refrigeration Fittings	Soundproof/insulation sheath (some models)		1
Drainpipe Fittings	Outlet pipe sheath(some models)		1
	Outlet pipe clasp(some models)		1
	Drain joint (some models)	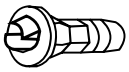	1
	Seal ring (some models)		1
Remote controller & Its Frame (some models)	Remote controller	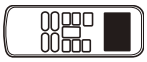	1
	Fixing screw for remote controller holder ST2.9 x 10		2
	Remote controller holder		1
	Dry battery AAA		2
	Remote controller illustration		1
EMC Magnetic Ring (some models)	Magnetic ring (wrap the electric wires S1 & S2 (P & Q & E) around the magnetic ring twice)	 S1&S2(P&Q&E)	1
	Magnetic ring (Hitch it on the connective cable between indoor unit and outdoor unit after installation.)		1
	Owner's manual&Installation manual		1

Optional accessories:

- There are two types of remote controls: wired and wireless.
- Select a remote controller based on customer preferences and requirements and install in an appropriate place.
- Refer to catalogues and technical literature for guidance on selecting a suitable remote controller.

6. Air Velocity and Temperature Distributions

18K-Ceiling installation:

Discharge Angle 30°

Cooling airflow velocity distributions

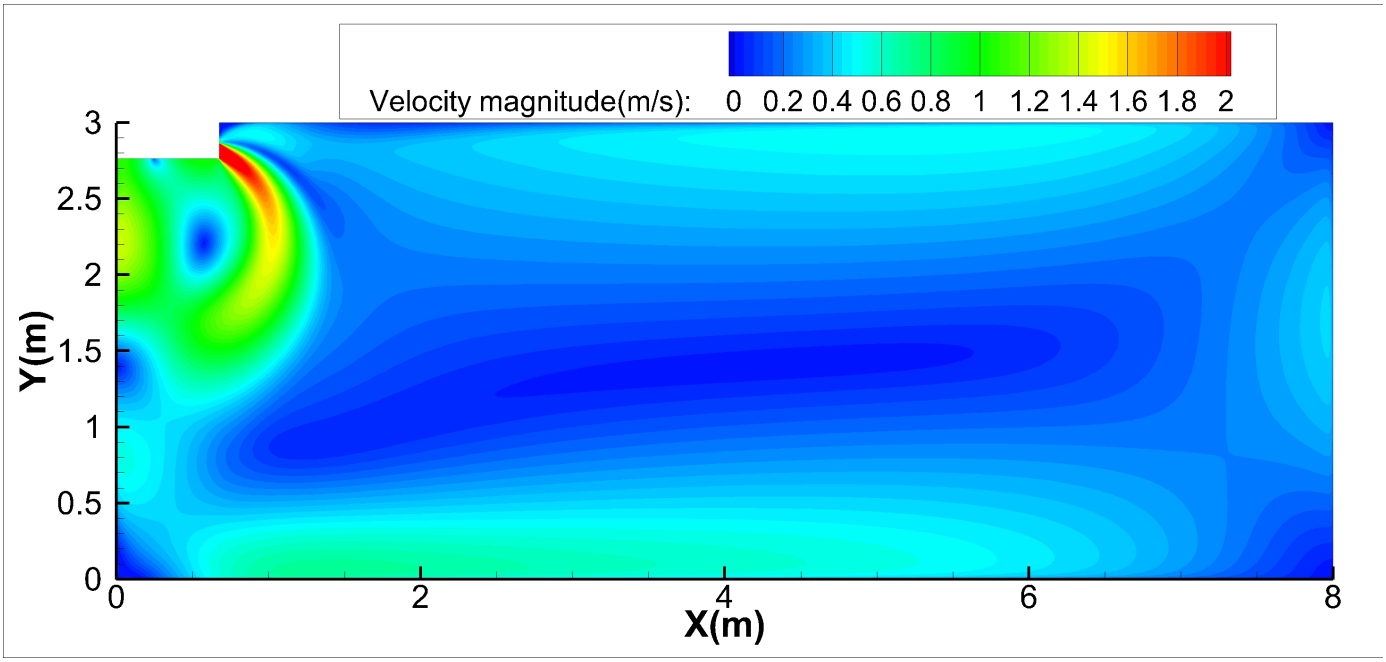

Cooling temperature distributions

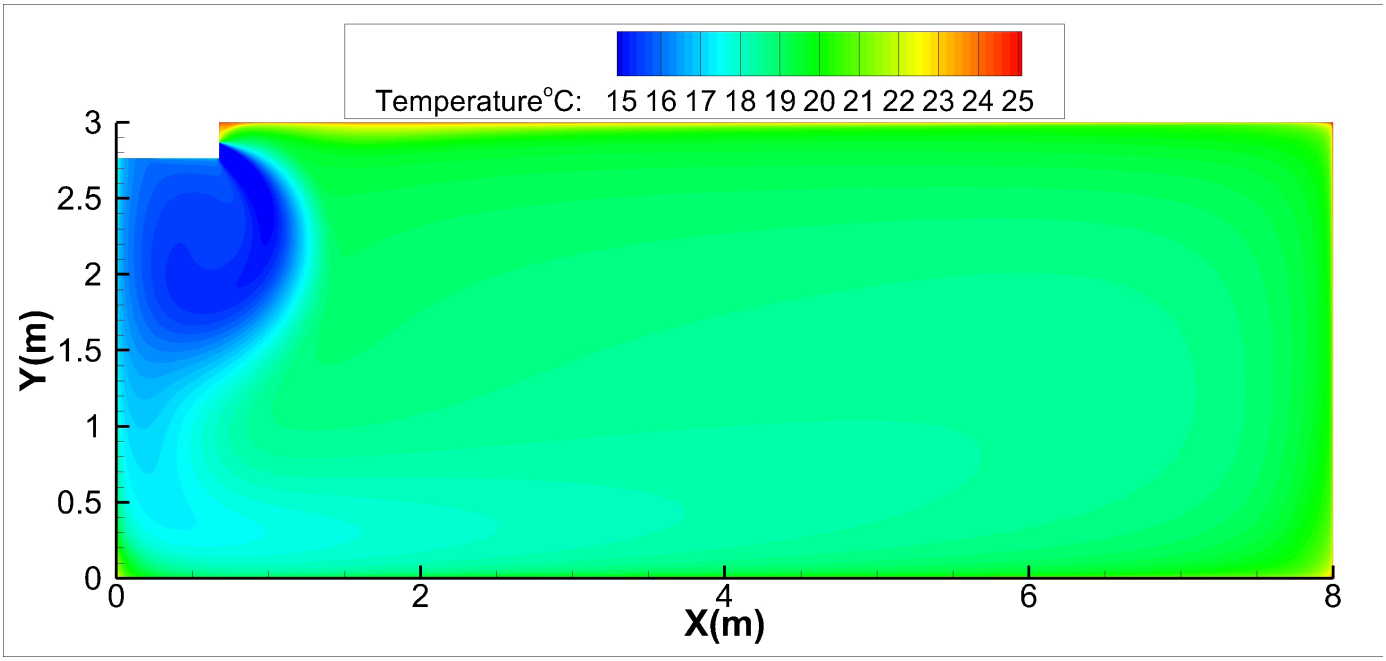

18K-Ceiling installation:

Discharge Angle 60°

Cooling airflow velocity distributions

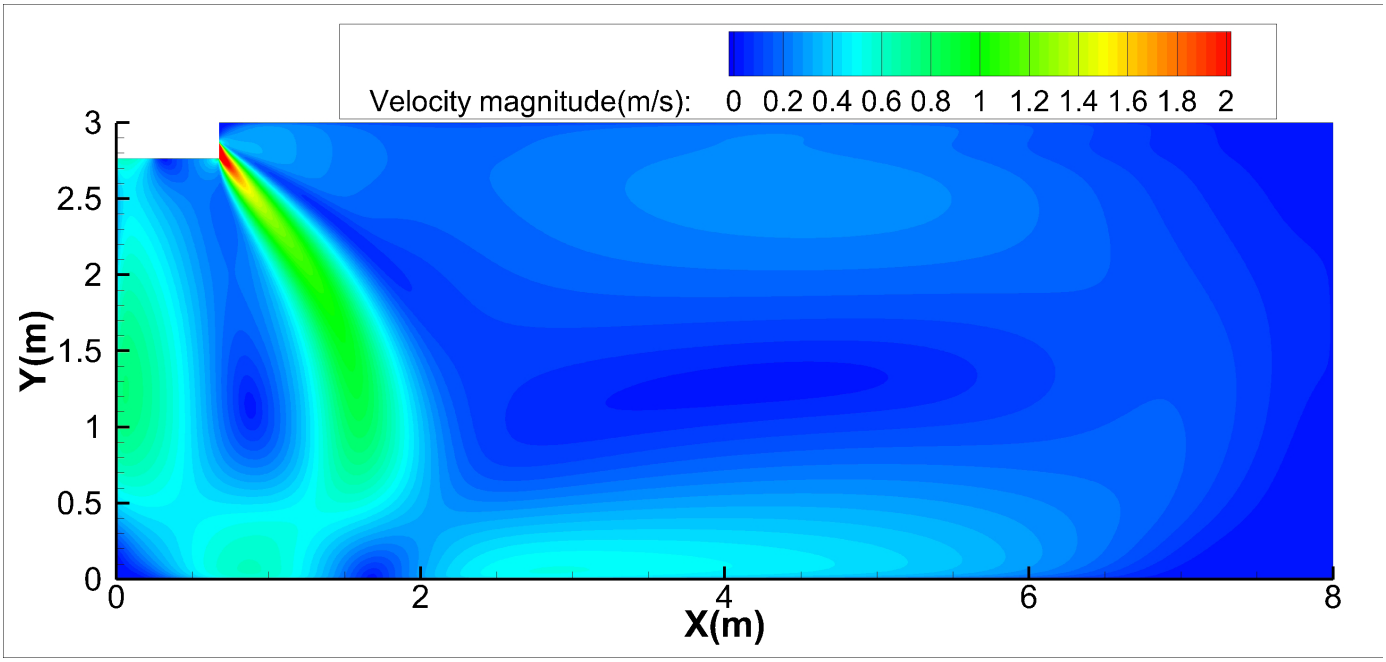

Cooling temperature distributions

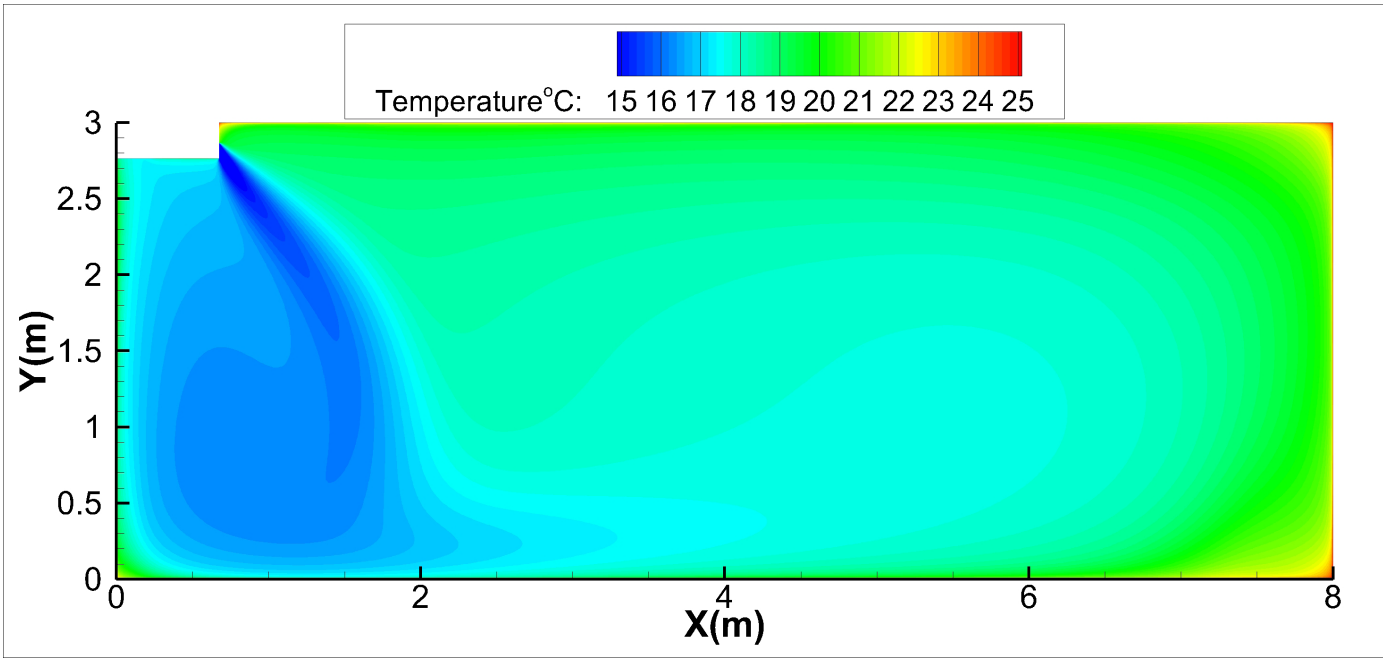

18K-Ceiling installation:

Discharge Angle 30°

Heating airflow velocity distributions

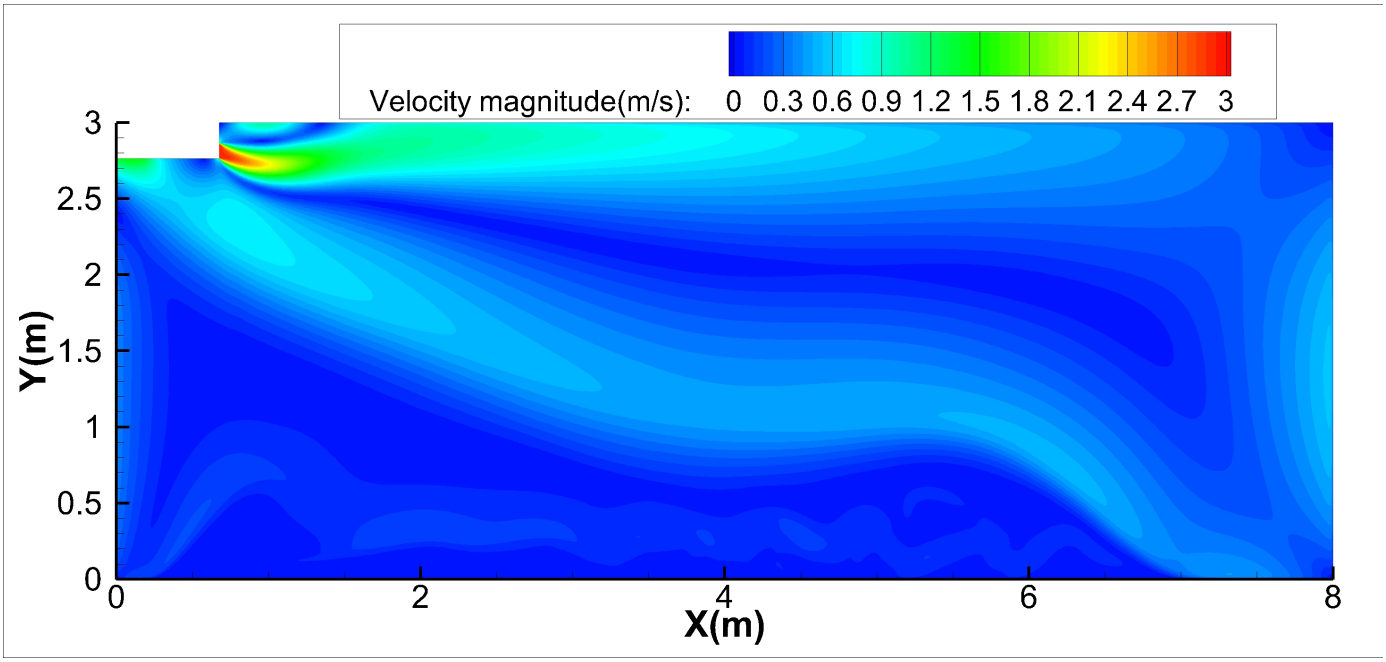

Heating temperature distributions

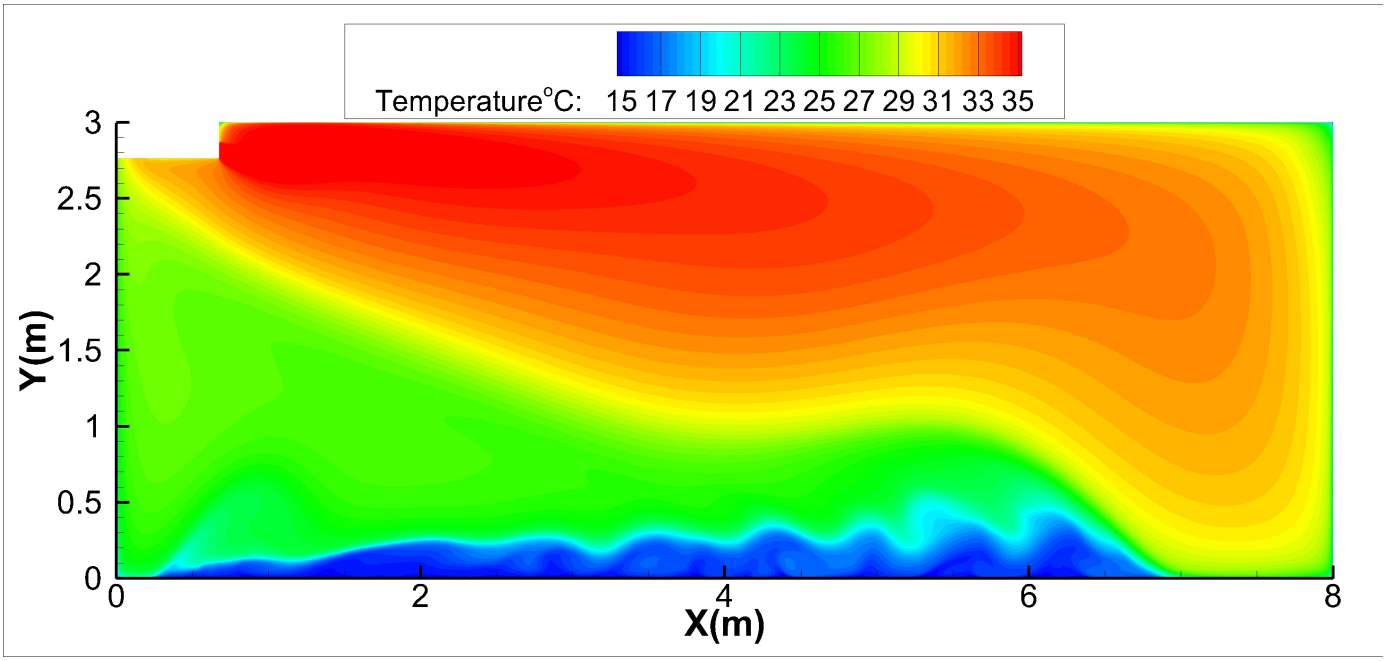

18K-Ceiling installation:

Discharge Angle 60°

Heating airflow velocity distributions

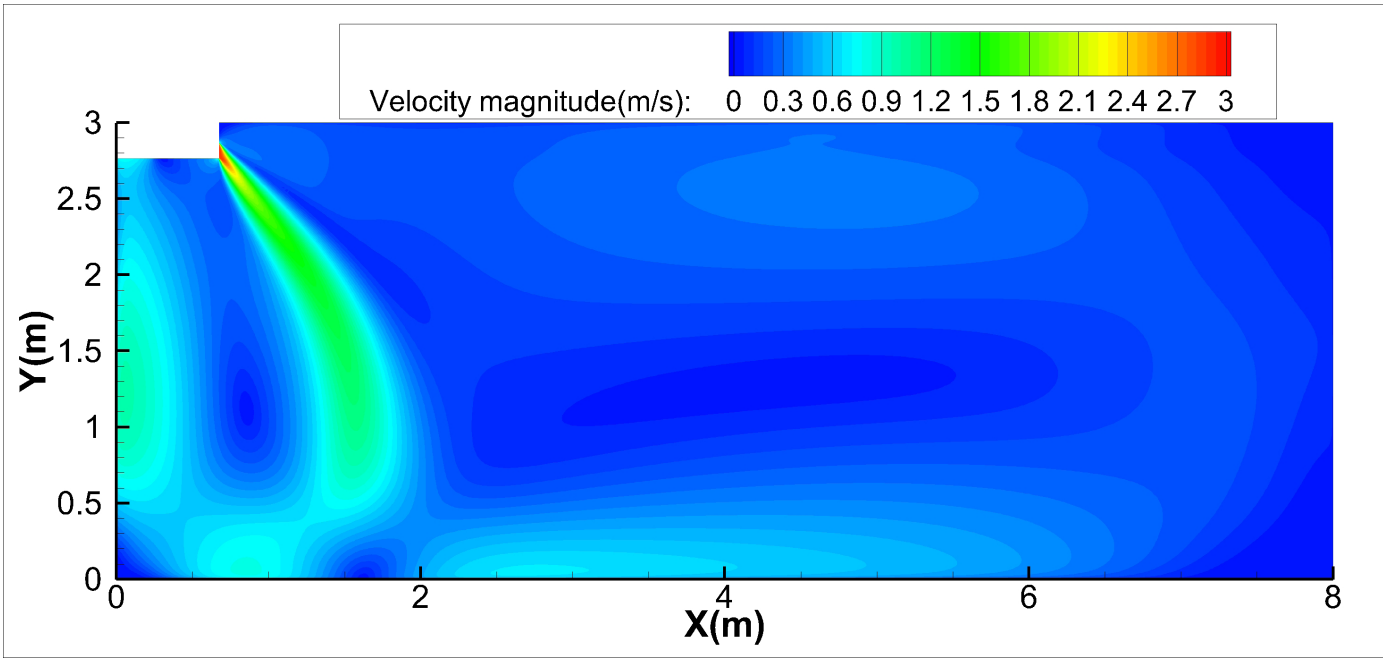

Heating temperature distributions

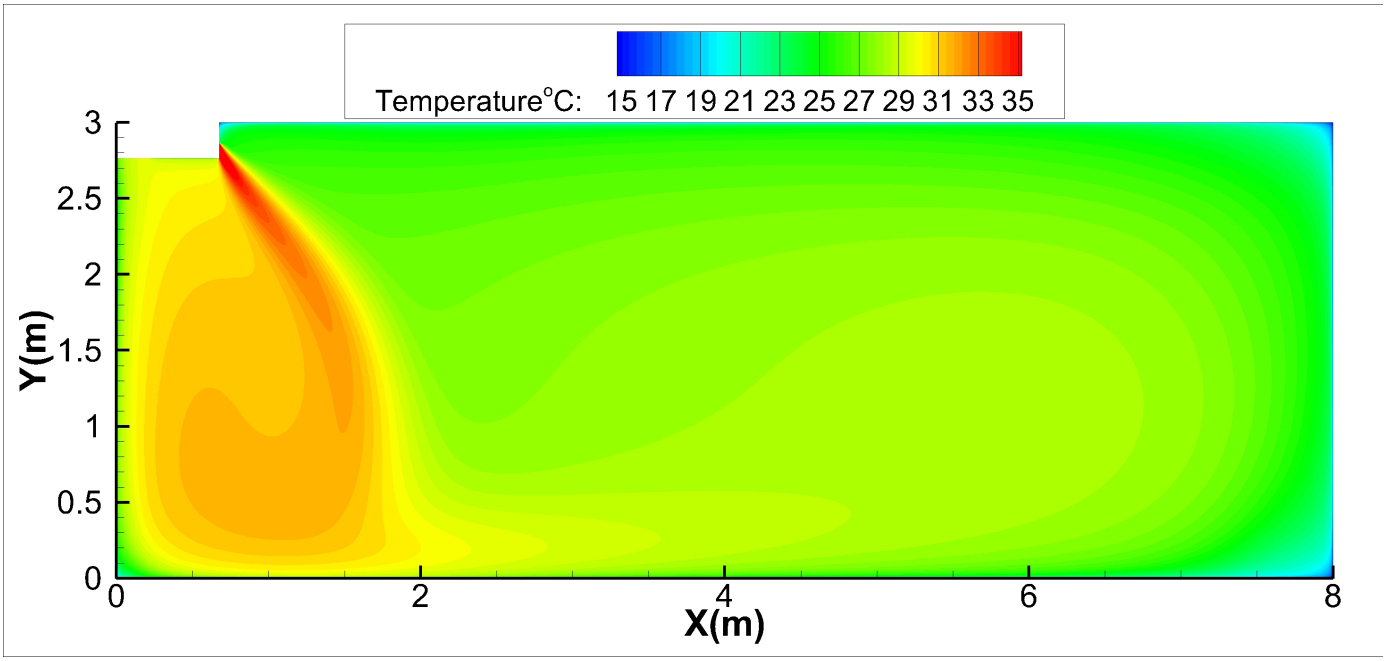

18K-Floor installation:

Discharge Angle 30°

Cooling airflow velocity distributions

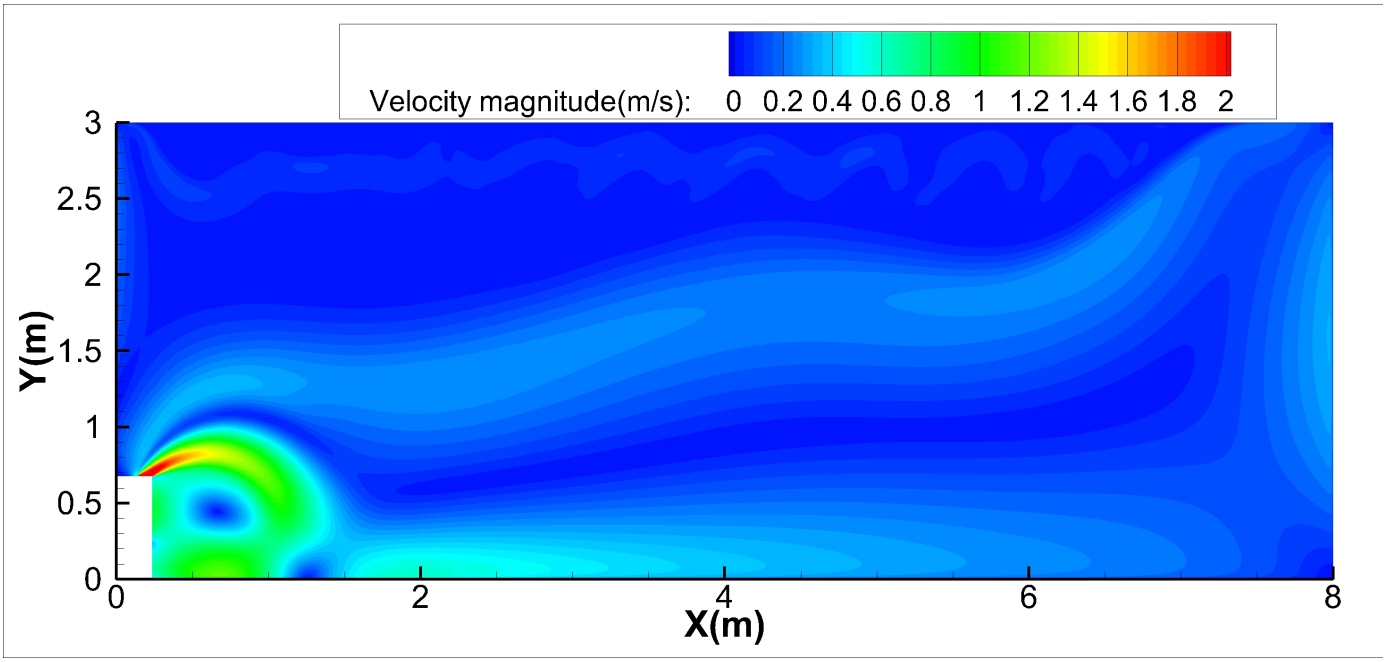

Cooling temperature distributions

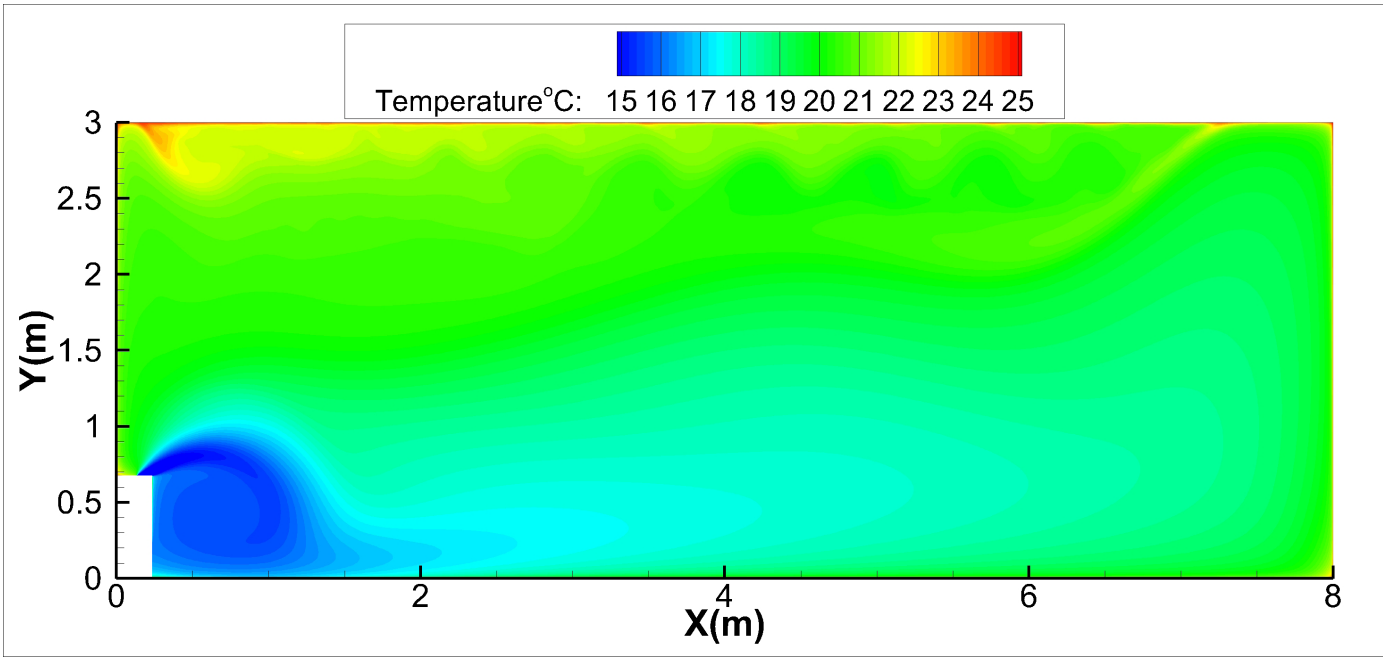

18K-Floor installation:

Discharge Angle 60°

Cooling airflow velocity distributions

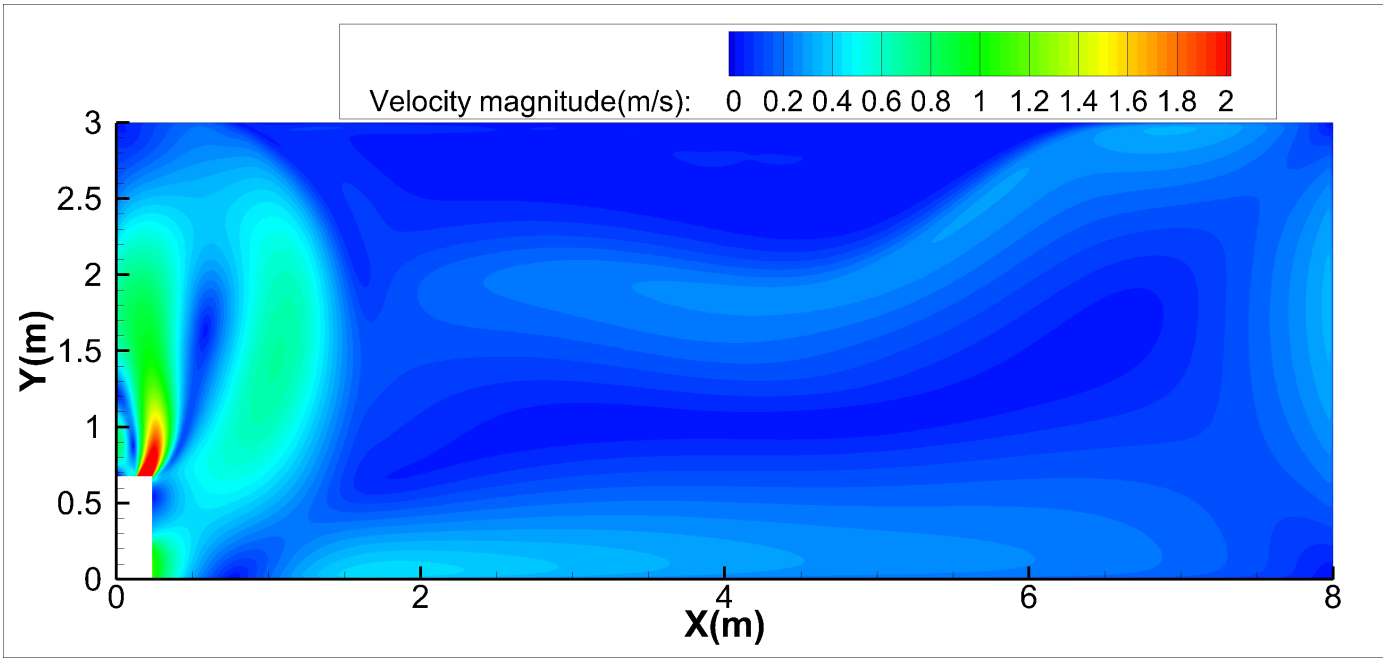

Cooling temperature distributions

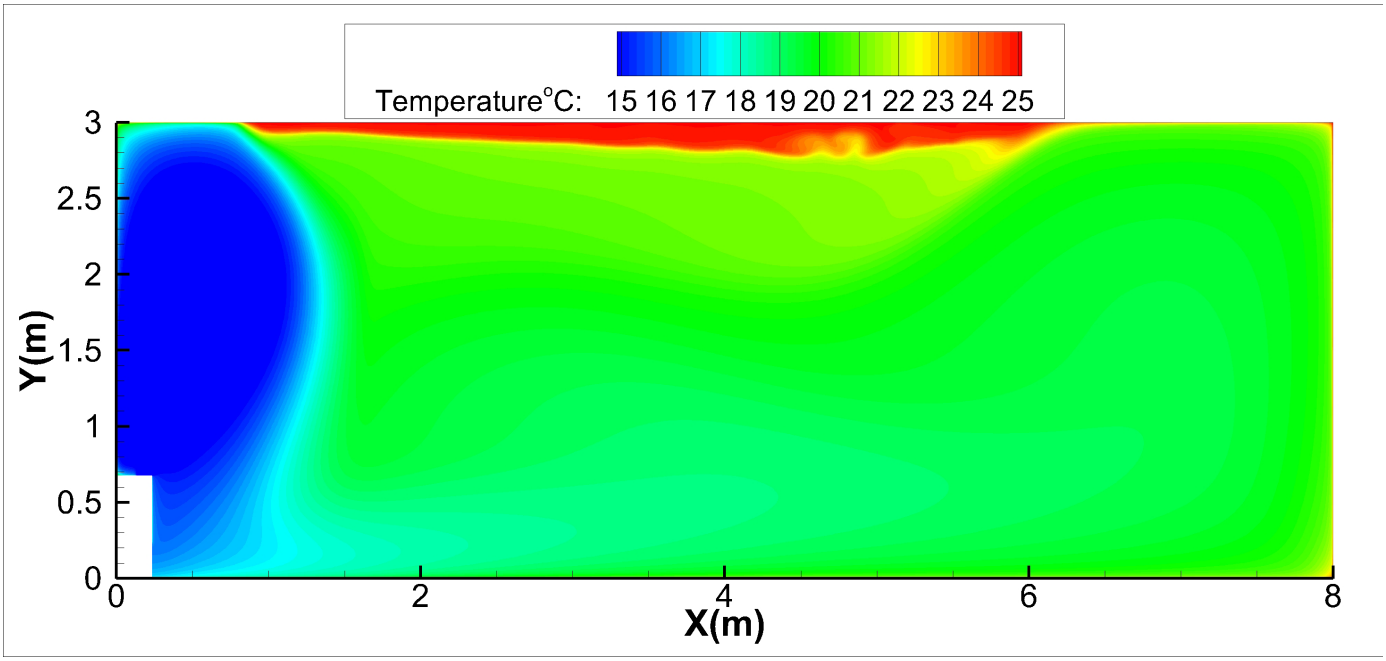

18K-Floor installation:

Discharge Angle 30°

Heating airflow velocity distributions

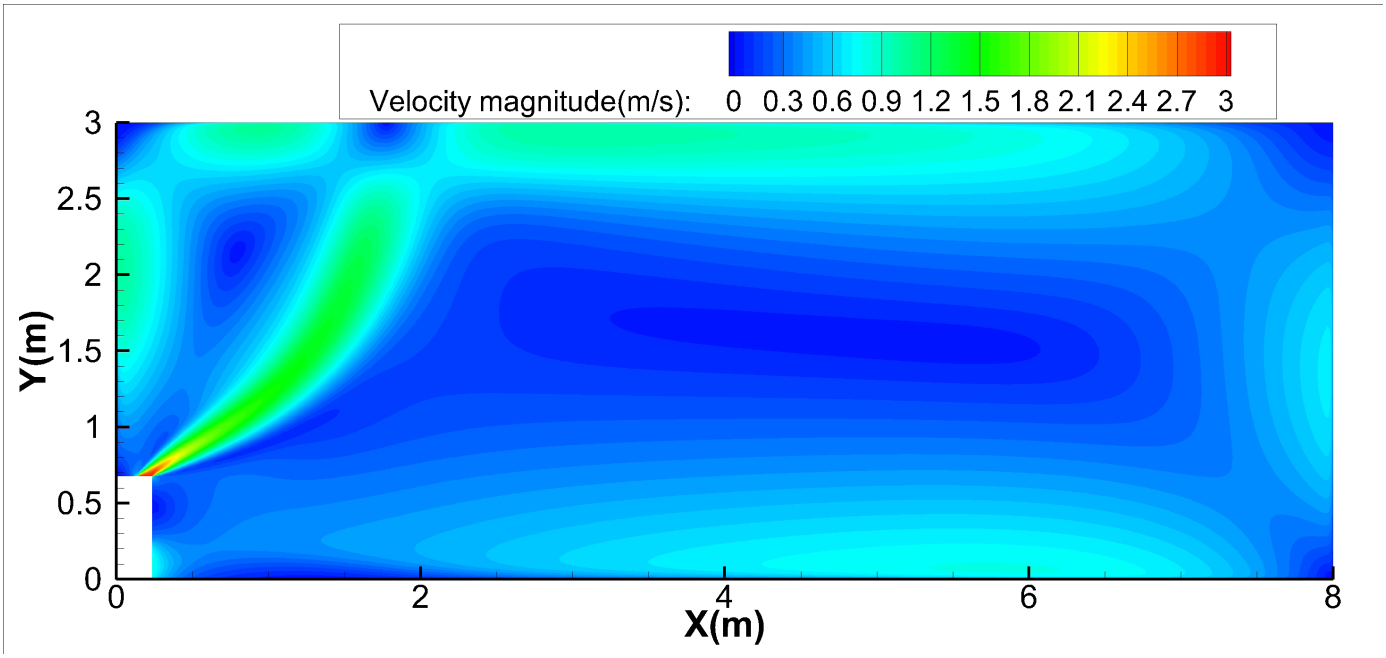

Heating temperature distributions

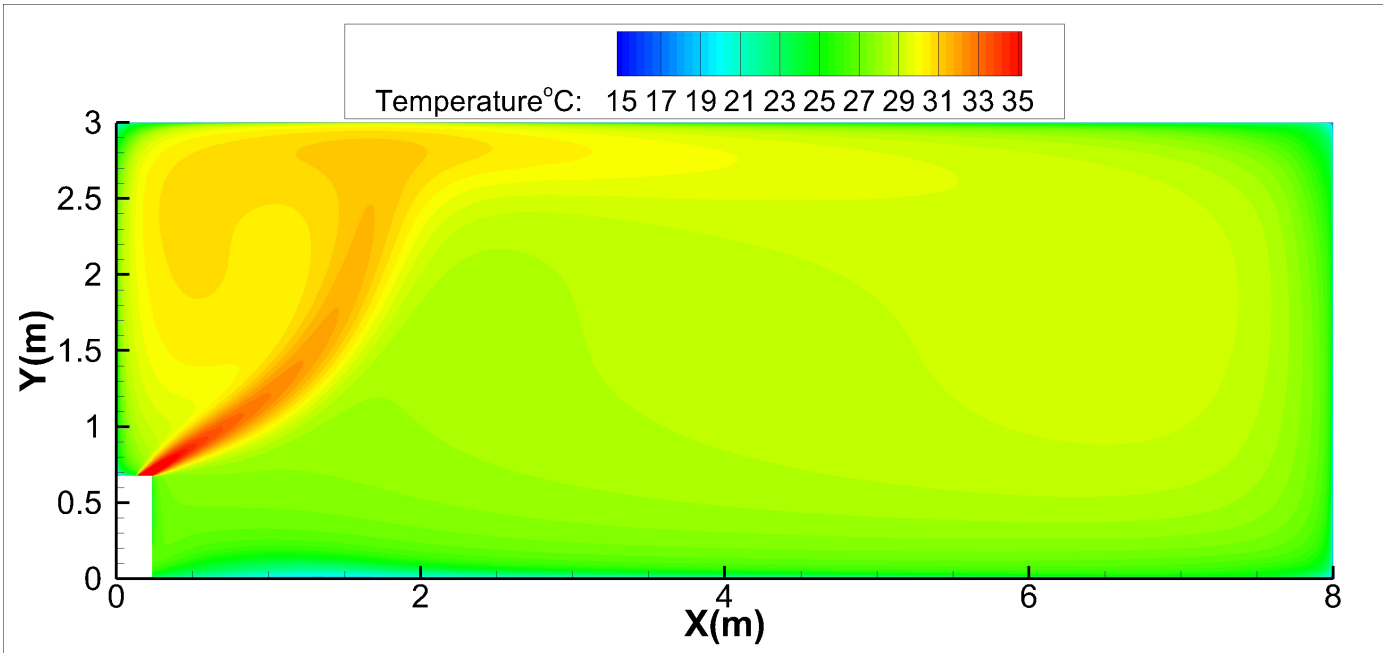

18K-Floor installation:

Discharge Angle 60°

Heating airflow velocity distributions

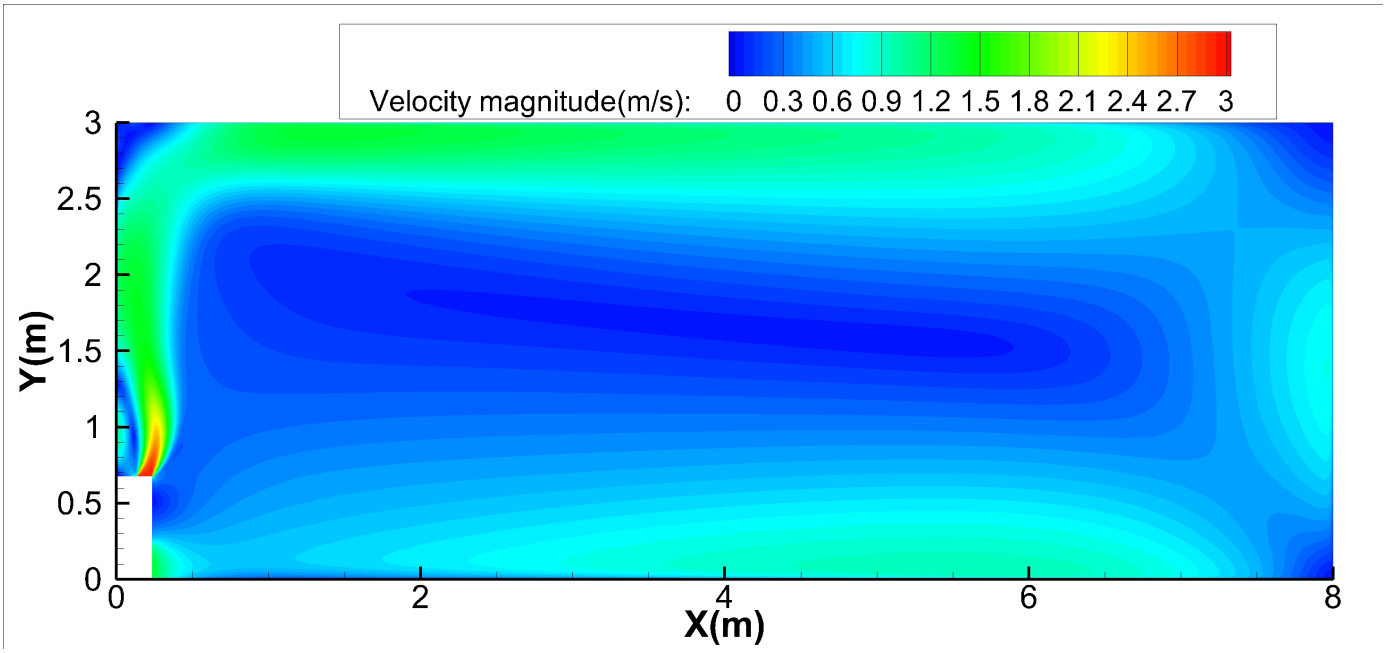

Heating temperature distributions

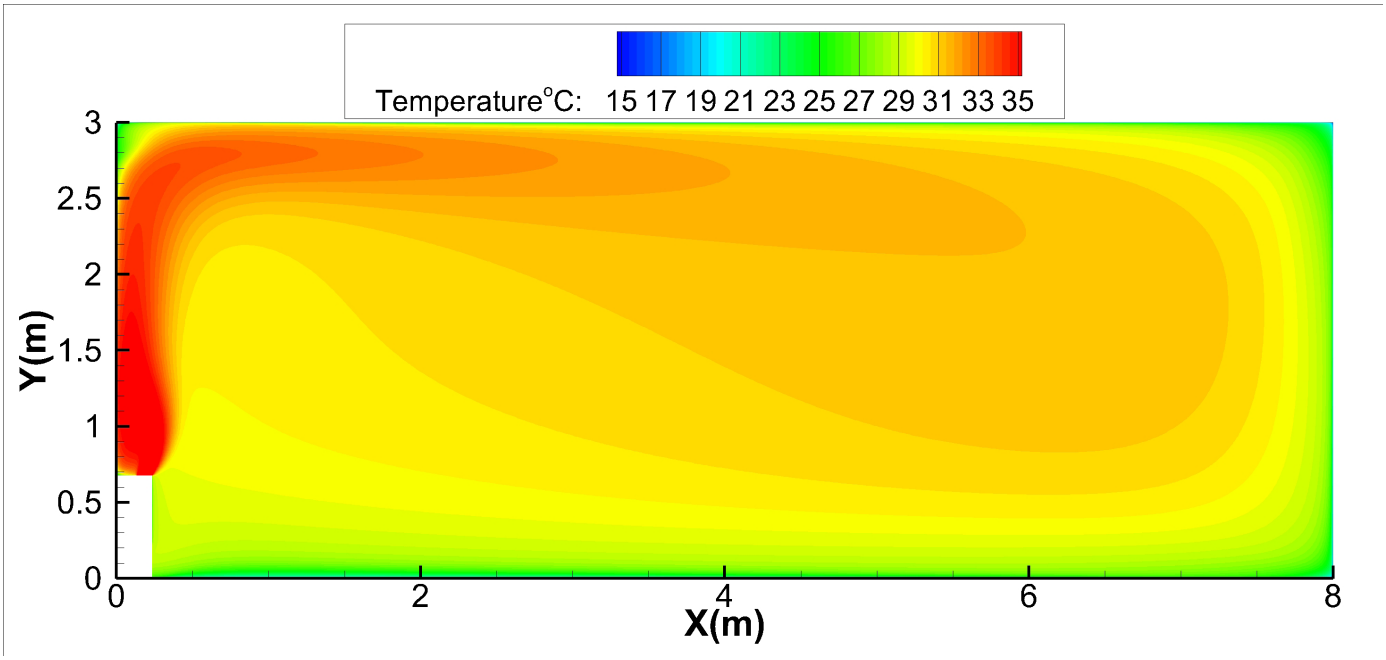

24K-Ceiling installation:

Discharge Angle 30°

Cooling airflow velocity distributions

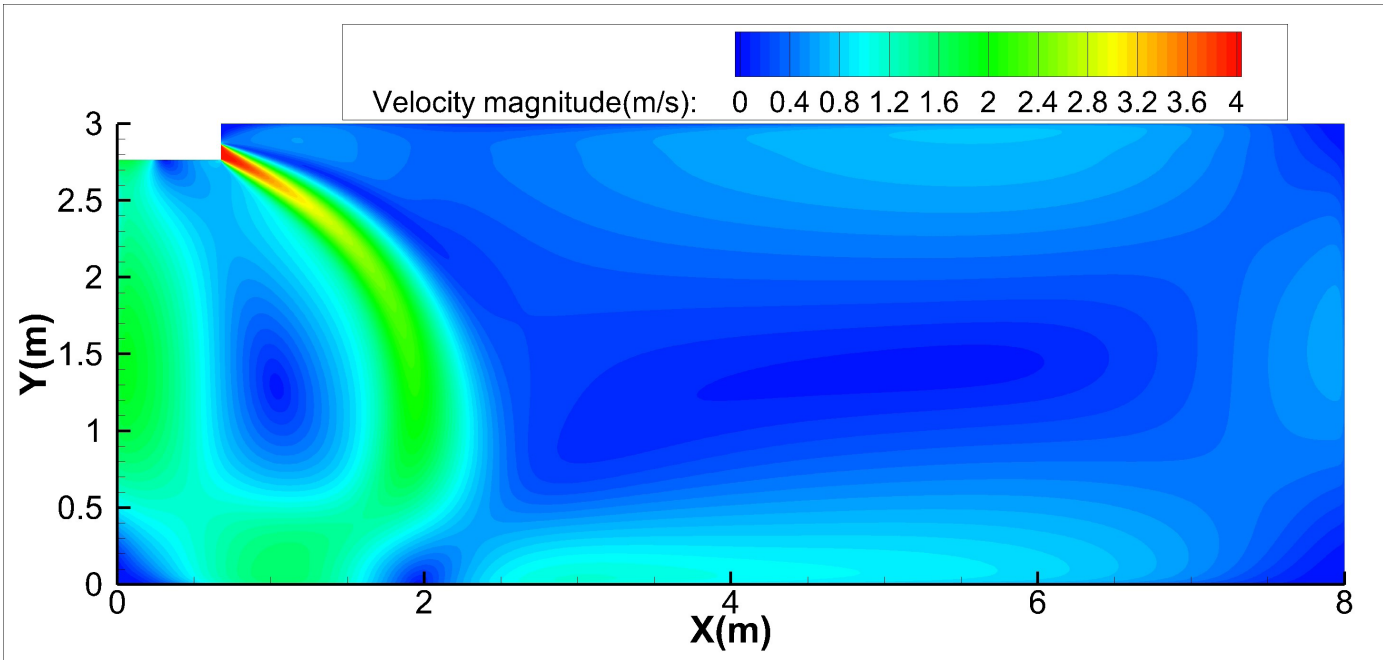

Cooling temperature distributions

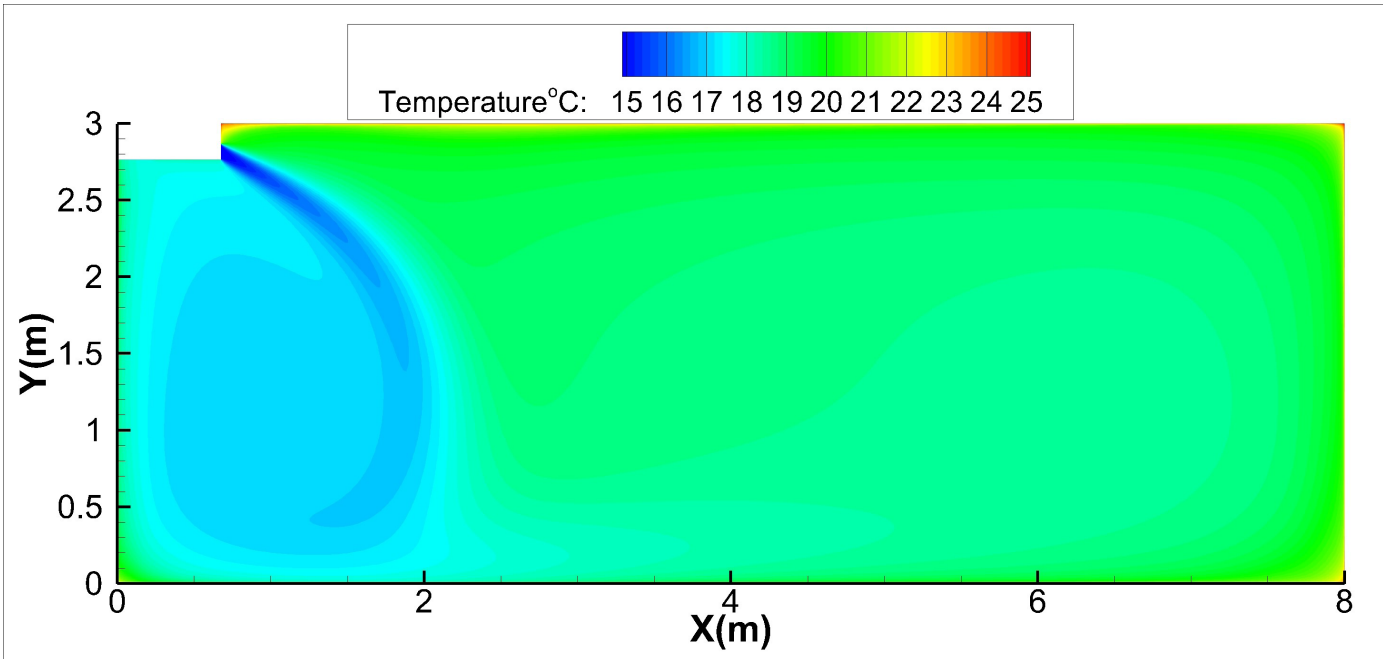

24K-Ceiling installation:

Discharge Angle 60°

Cooling airflow velocity distributions

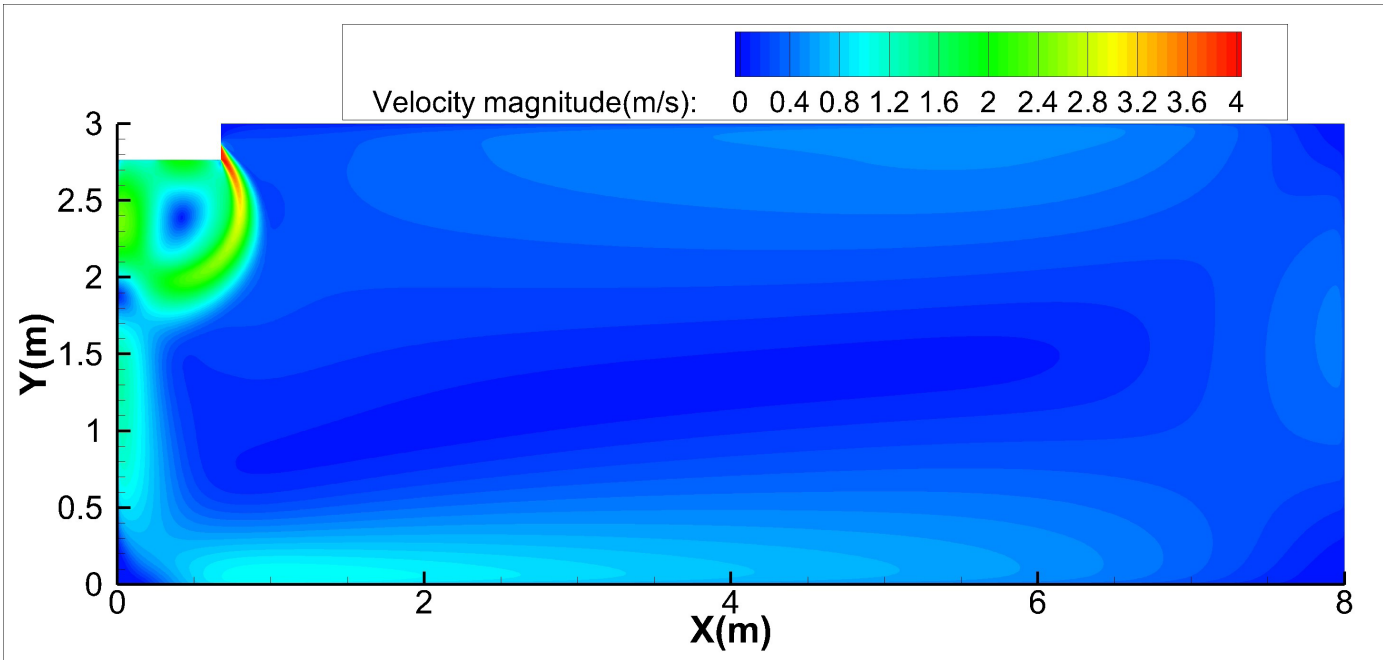

Cooling temperature distributions

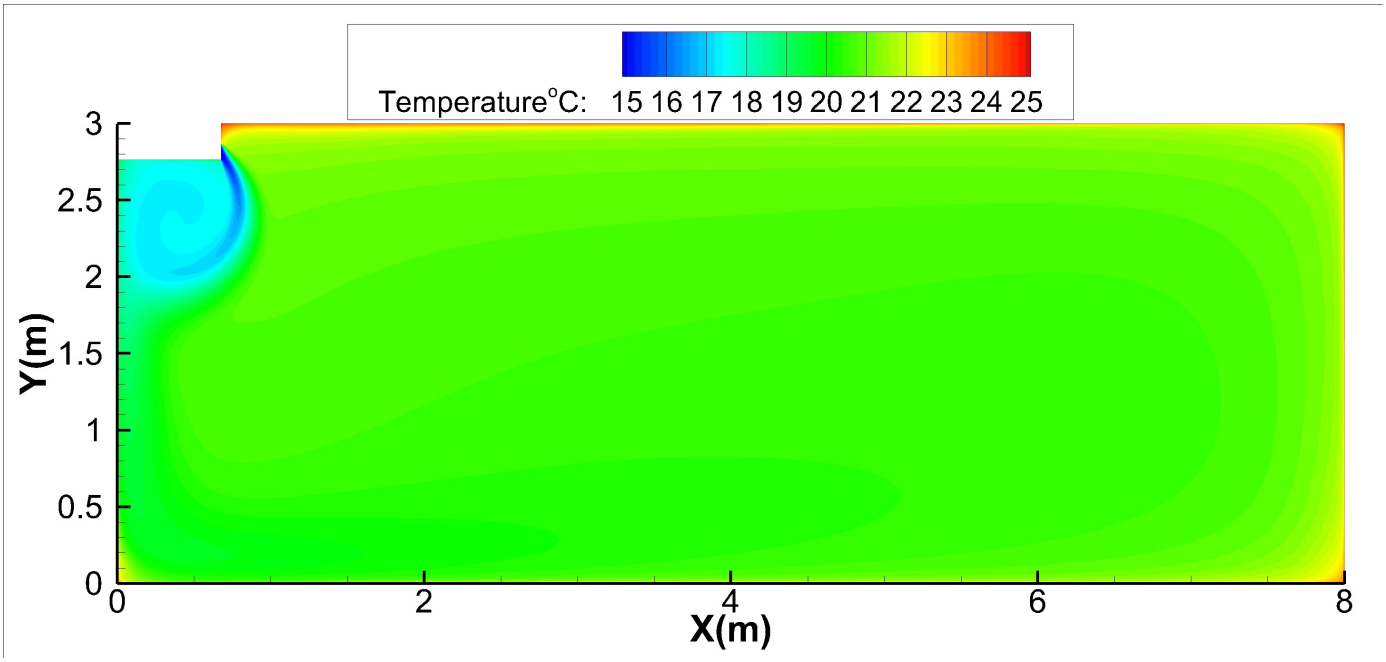

24K-Ceiling installation:

Discharge Angle 30°

Heating airflow velocity distributions

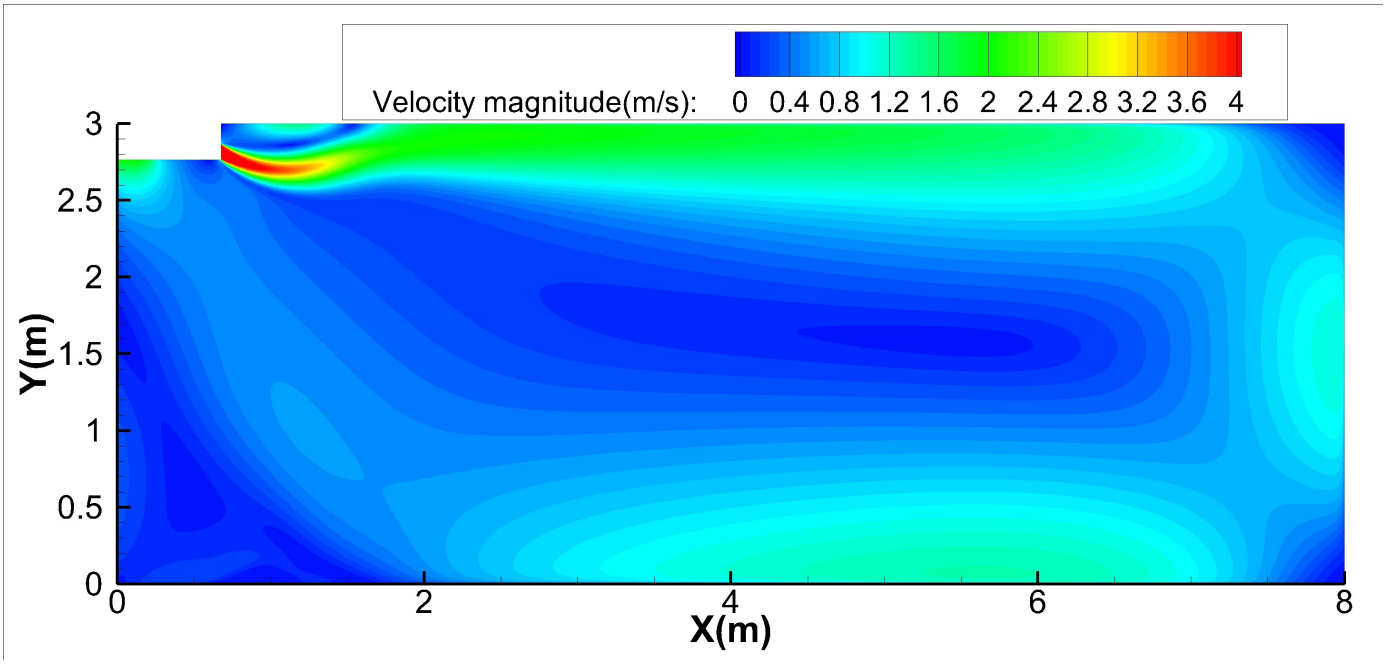

Heating temperature distributions

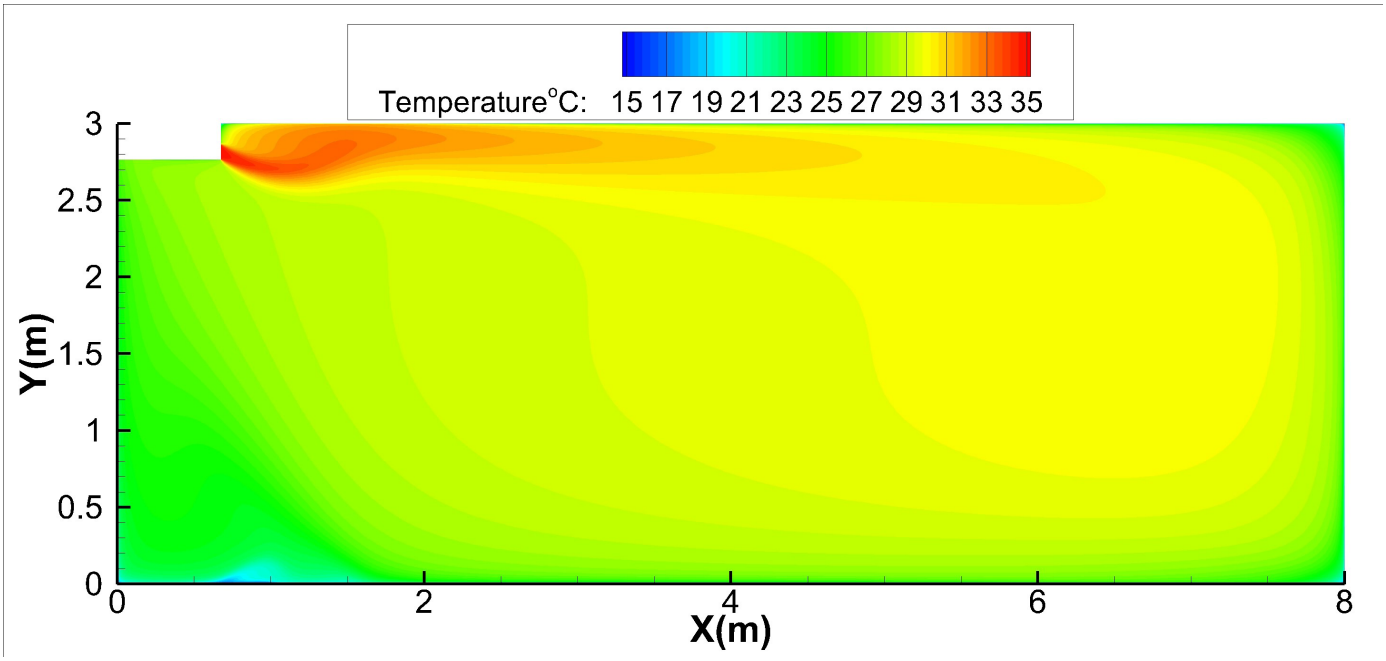

24K-Ceiling installation:

Discharge Angle 60°

Heating airflow velocity distributions

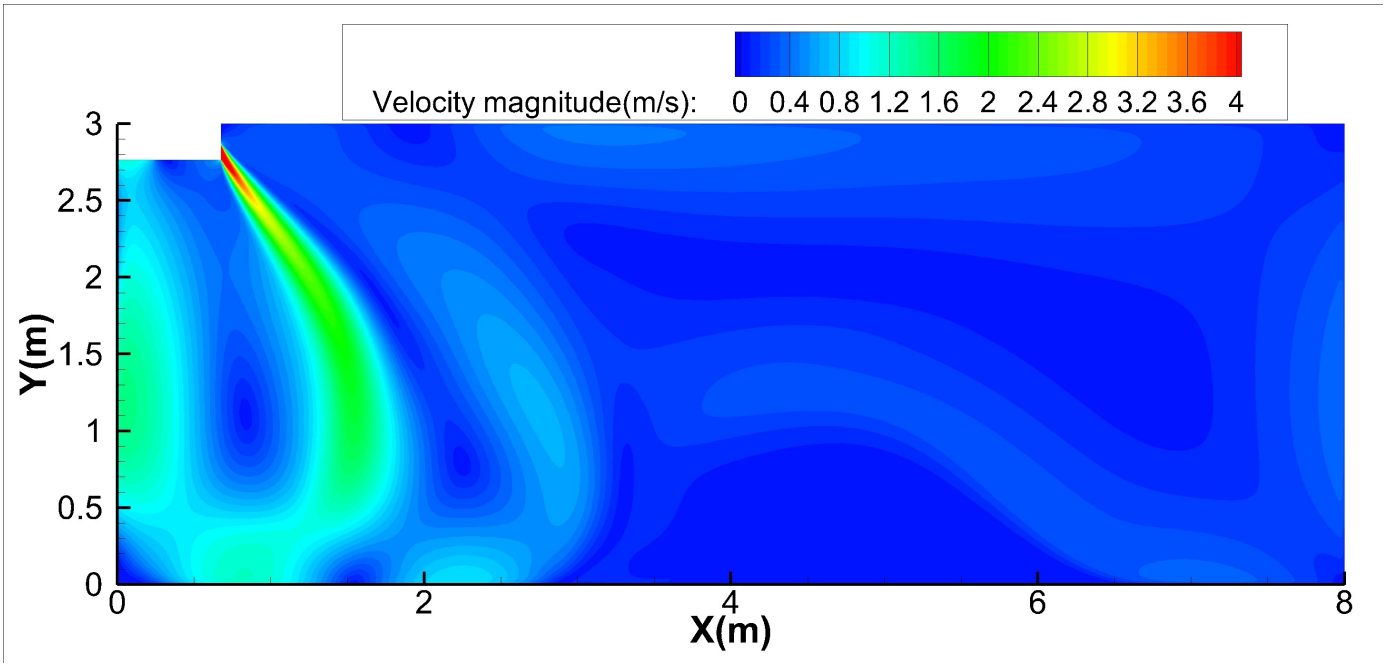

Heating temperature distributions

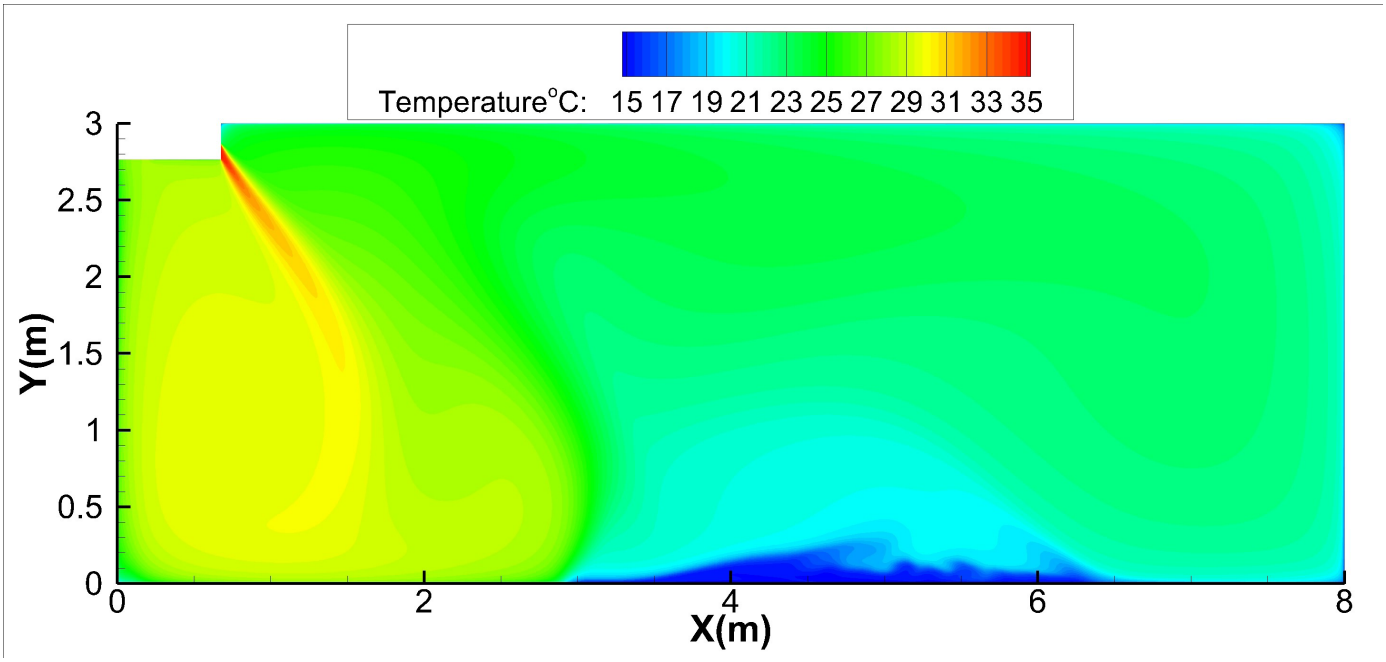

24K-Floor installation:

Discharge Angle 30°

Cooling airflow velocity distributions

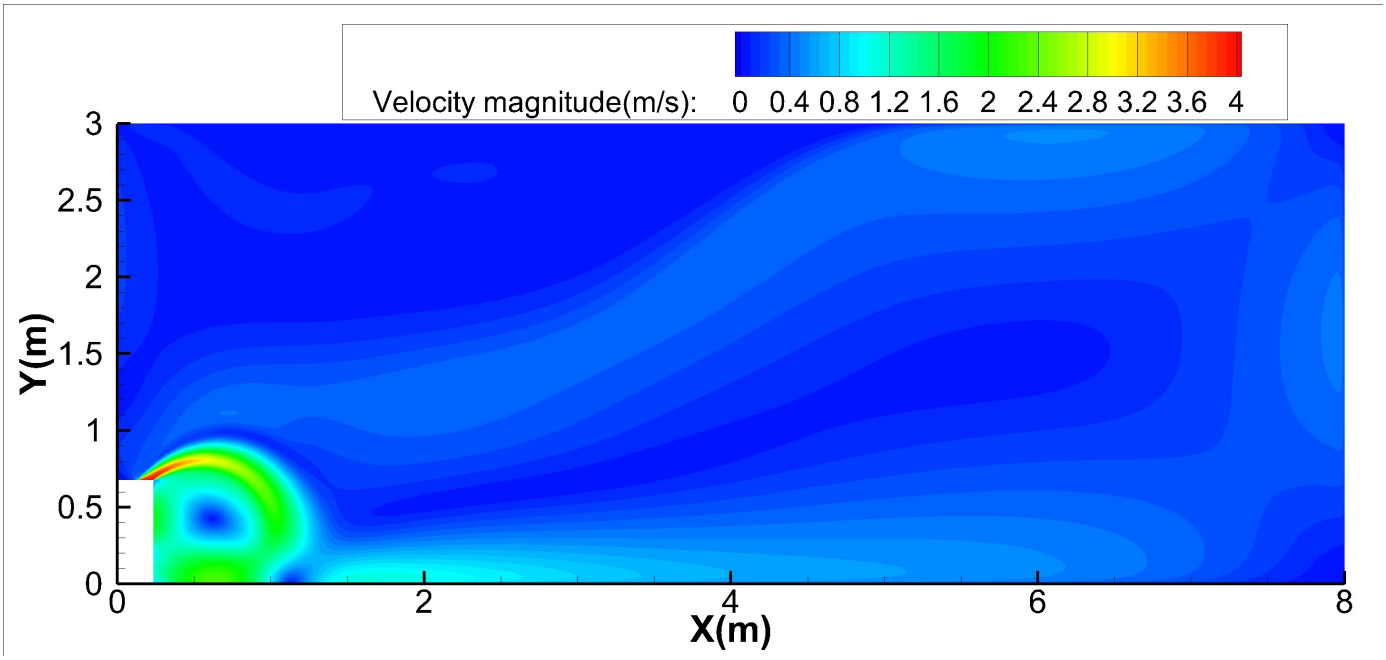

Cooling temperature distributions

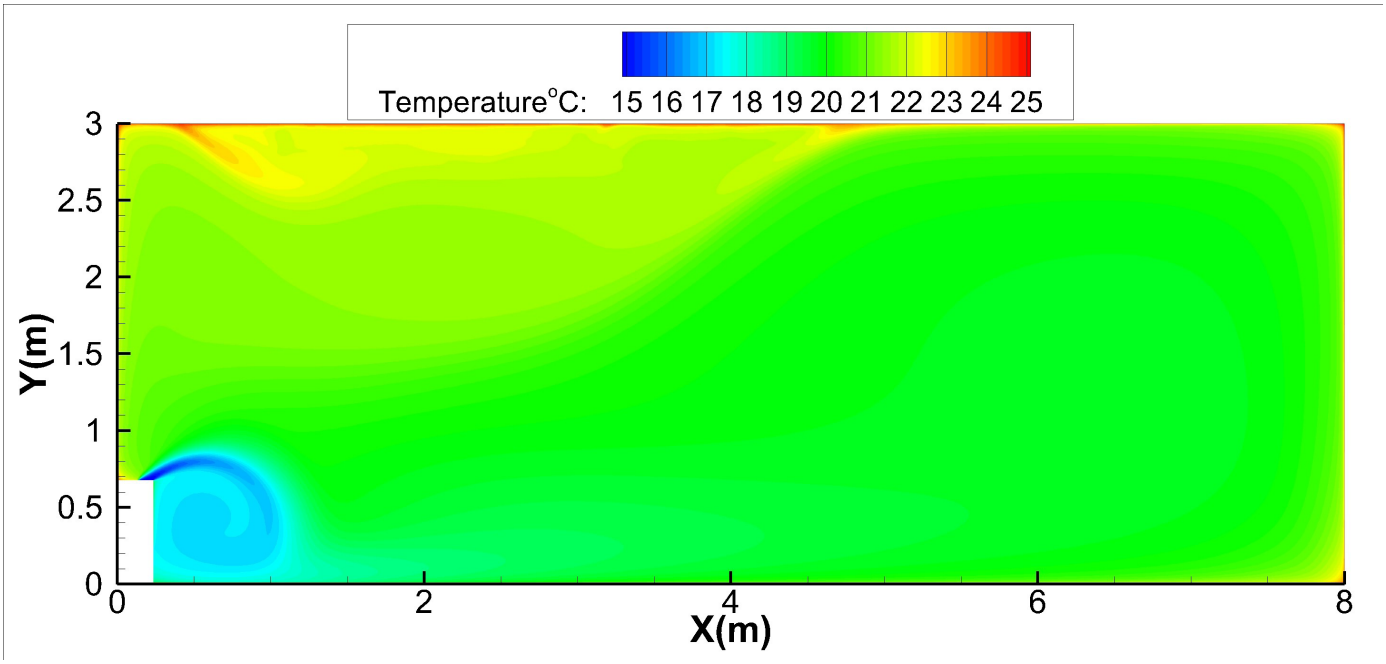

24K-Floor installation:

Discharge Angle 60°

Cooling airflow velocity distributions

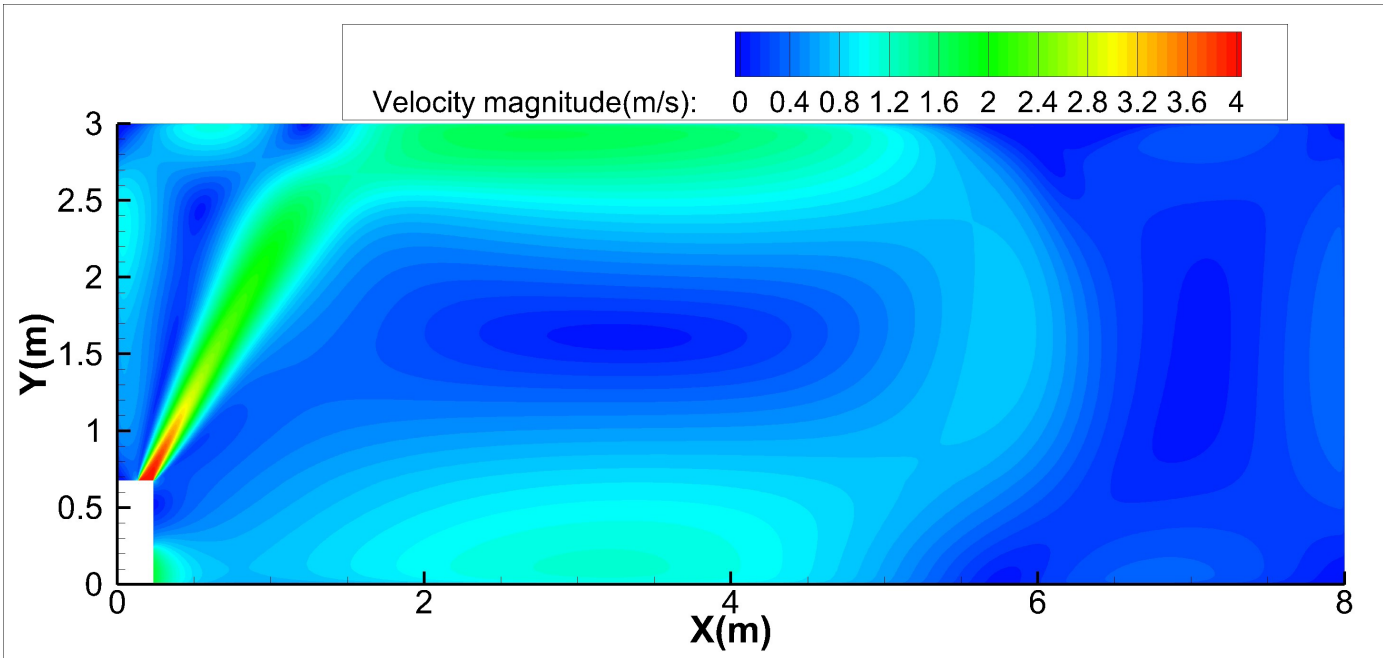

Cooling temperature distributions

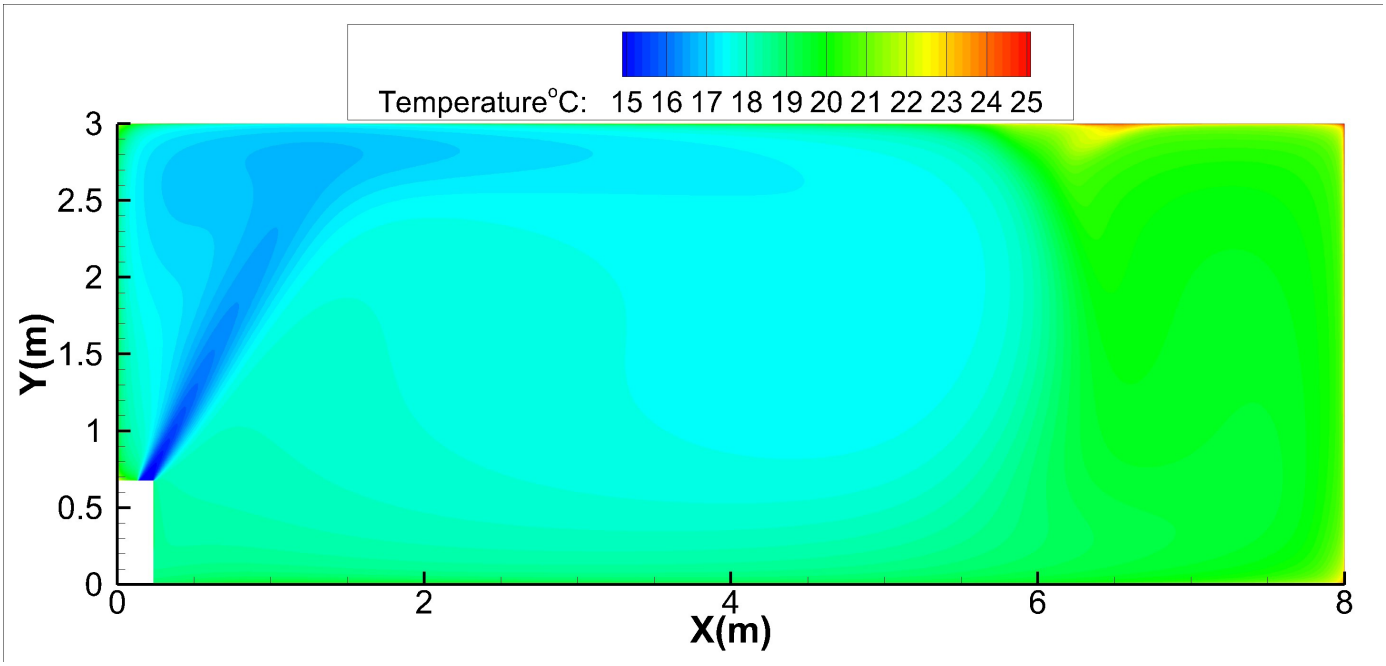

24K-Floor installation:

Discharge Angle 30°

Heating airflow velocity distributions

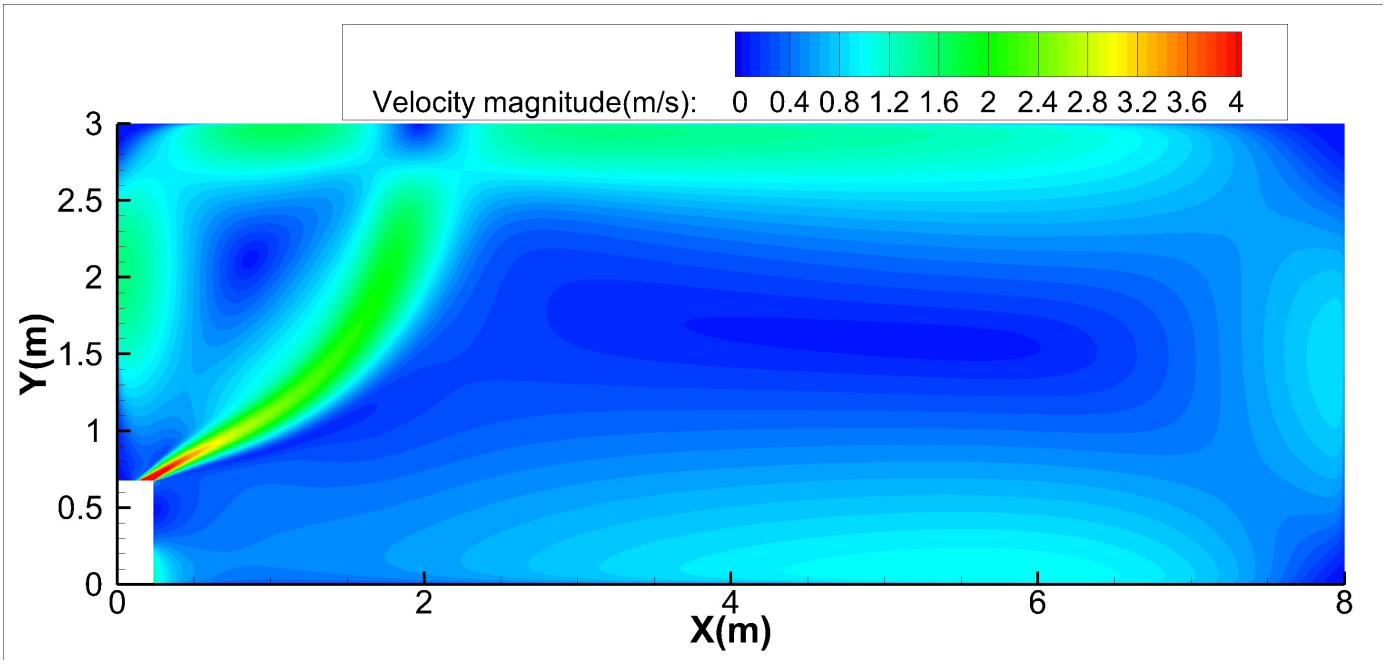

Heating temperature distributions

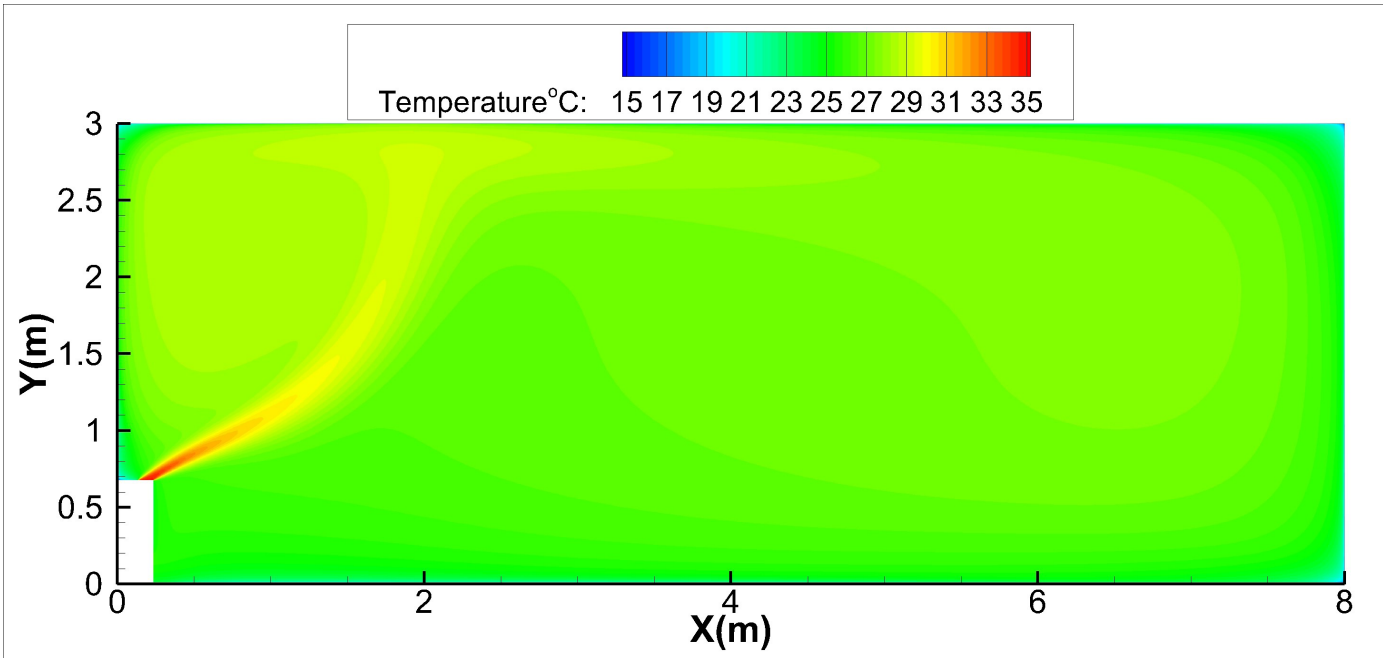

24K-Floor installation:

Discharge Angle 60°

Heating airflow velocity distributions

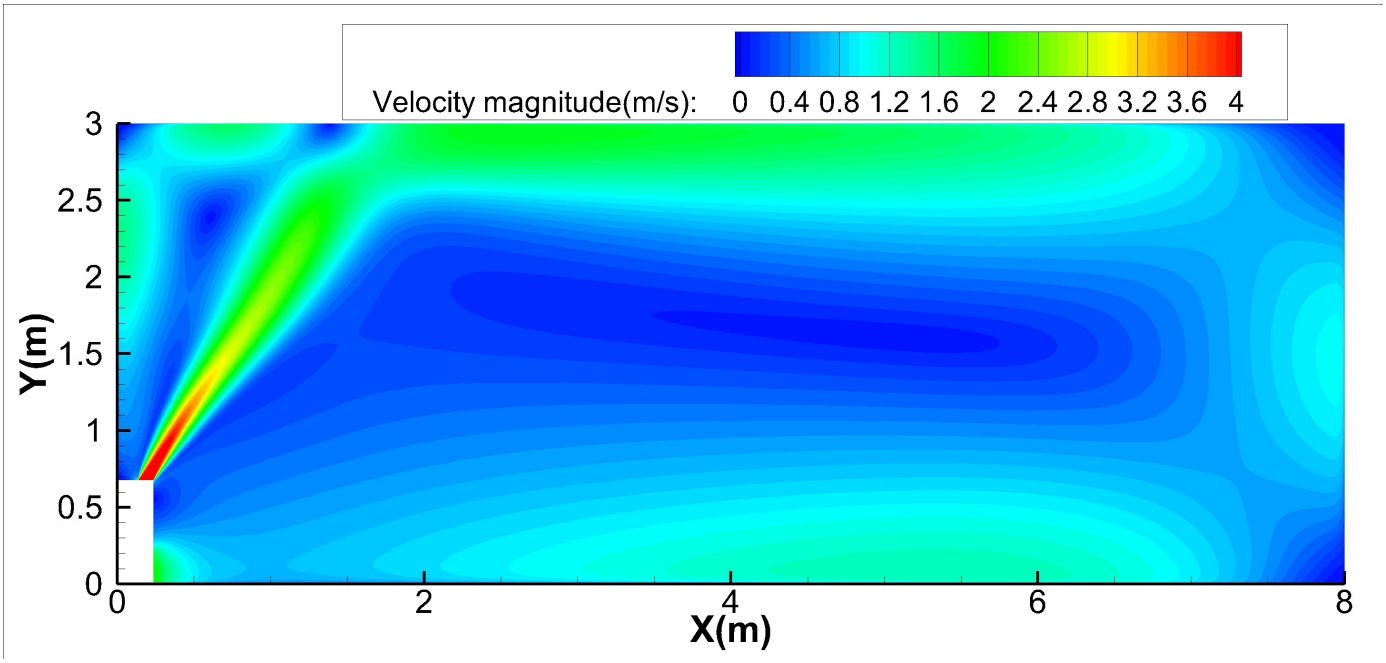

Heating temperature distributions

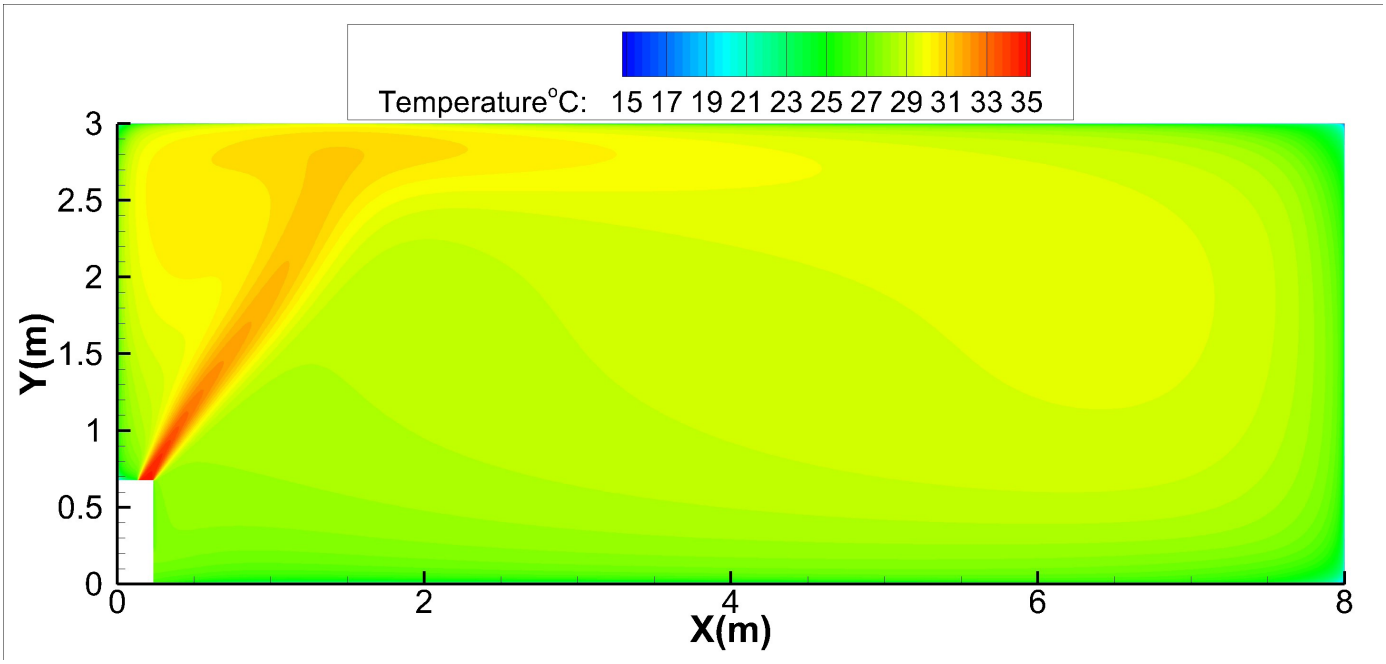

30K-Ceiling installation:

Discharge Angle 30°

Cooling airflow velocity distributions

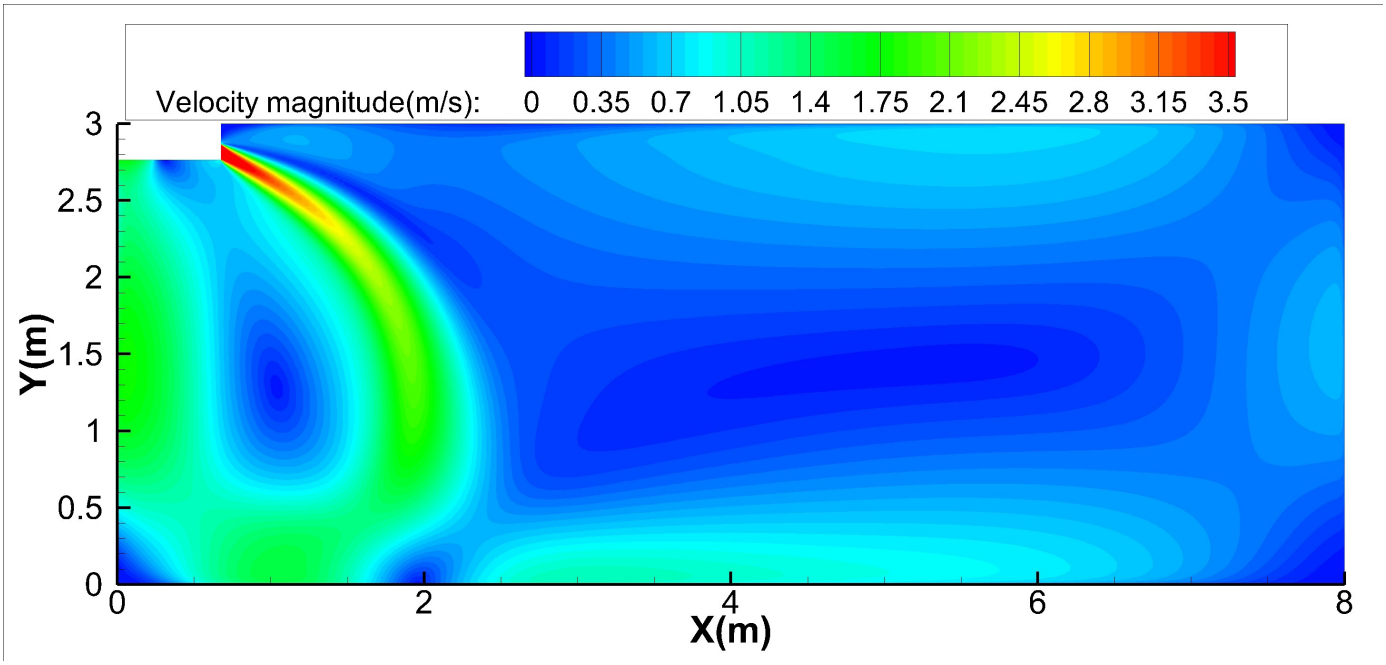

Cooling temperature distributions

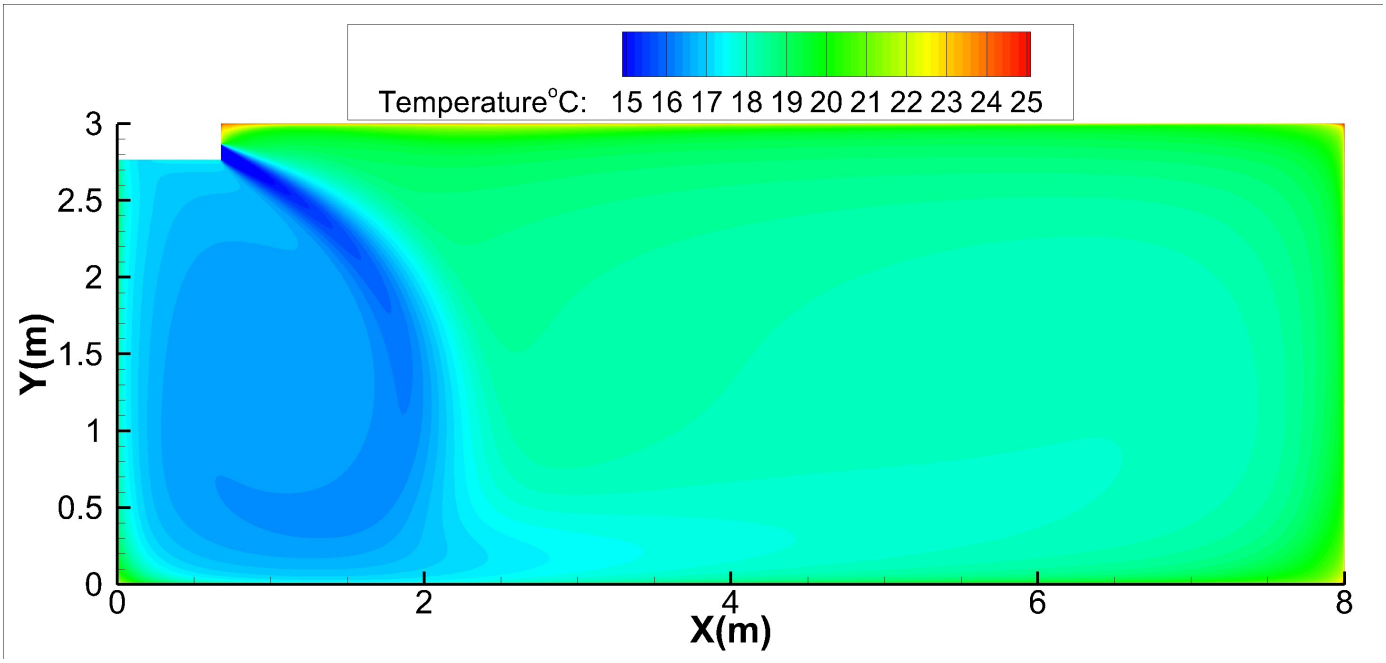

30K-Ceiling installation:

Discharge Angle 60°

Cooling airflow velocity distributions

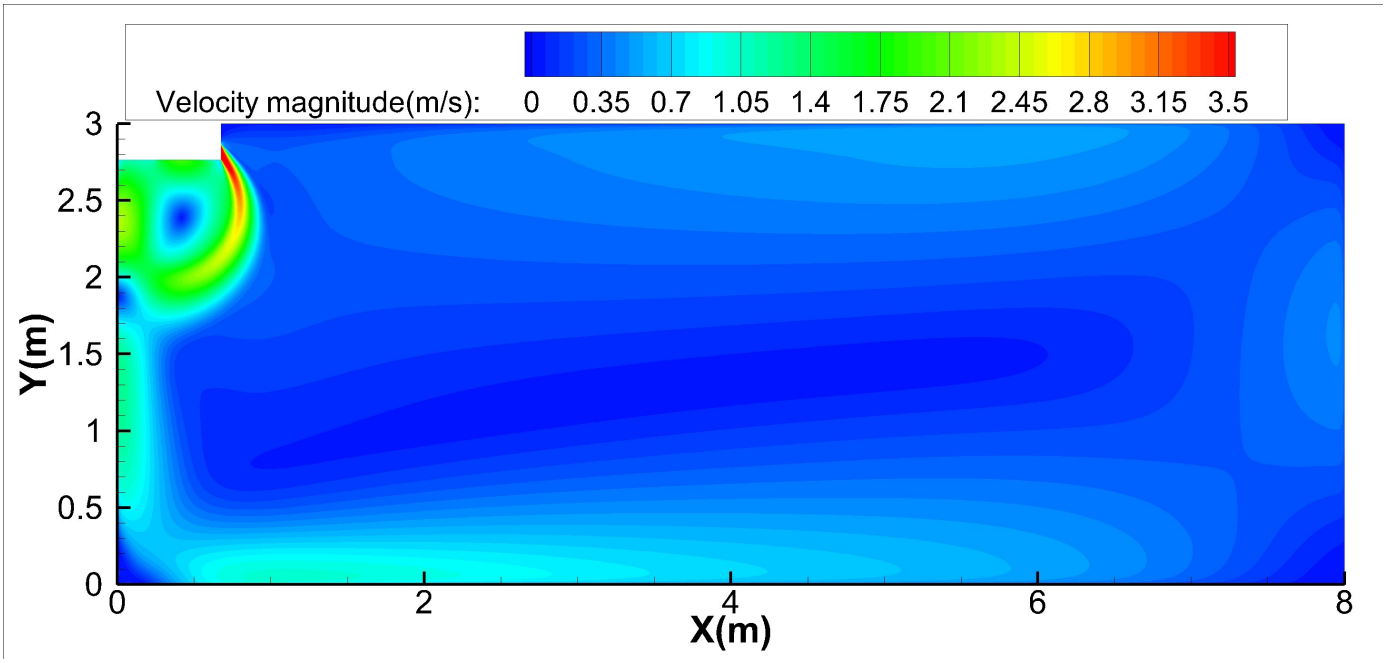

Cooling temperature distributions

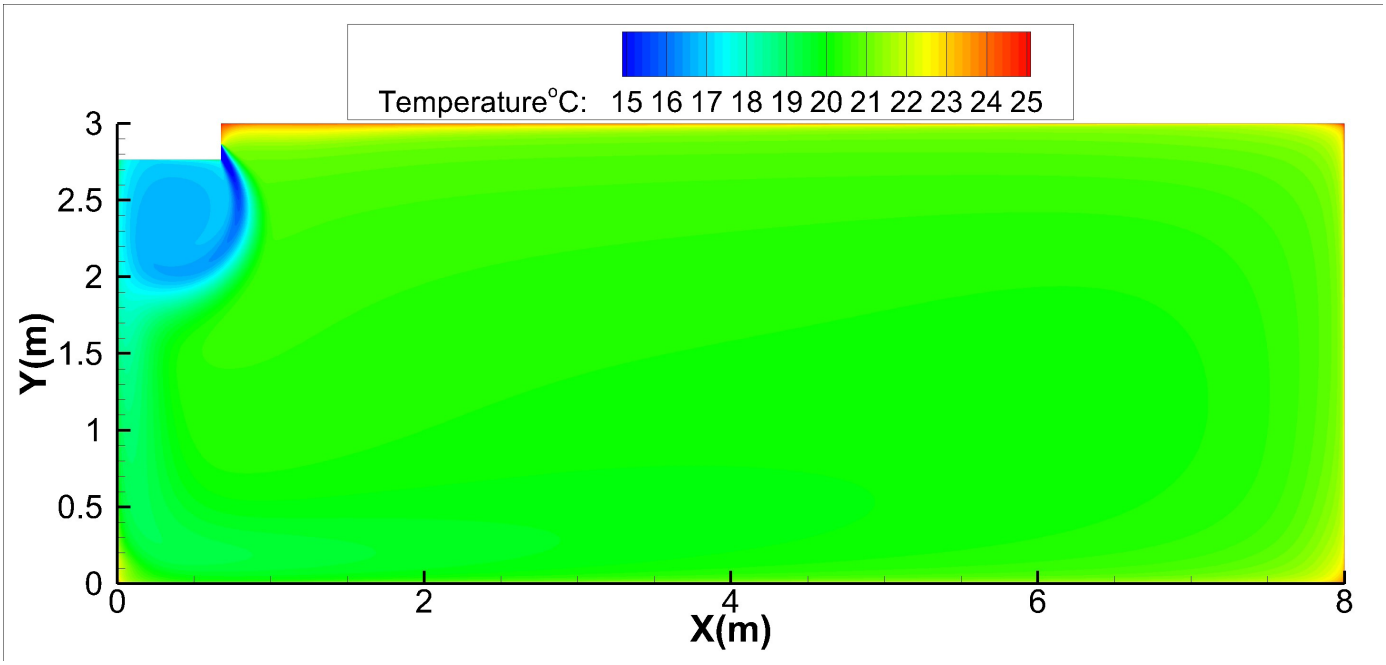

30K-Ceiling installation:

Discharge Angle 30°

Heating airflow velocity distributions

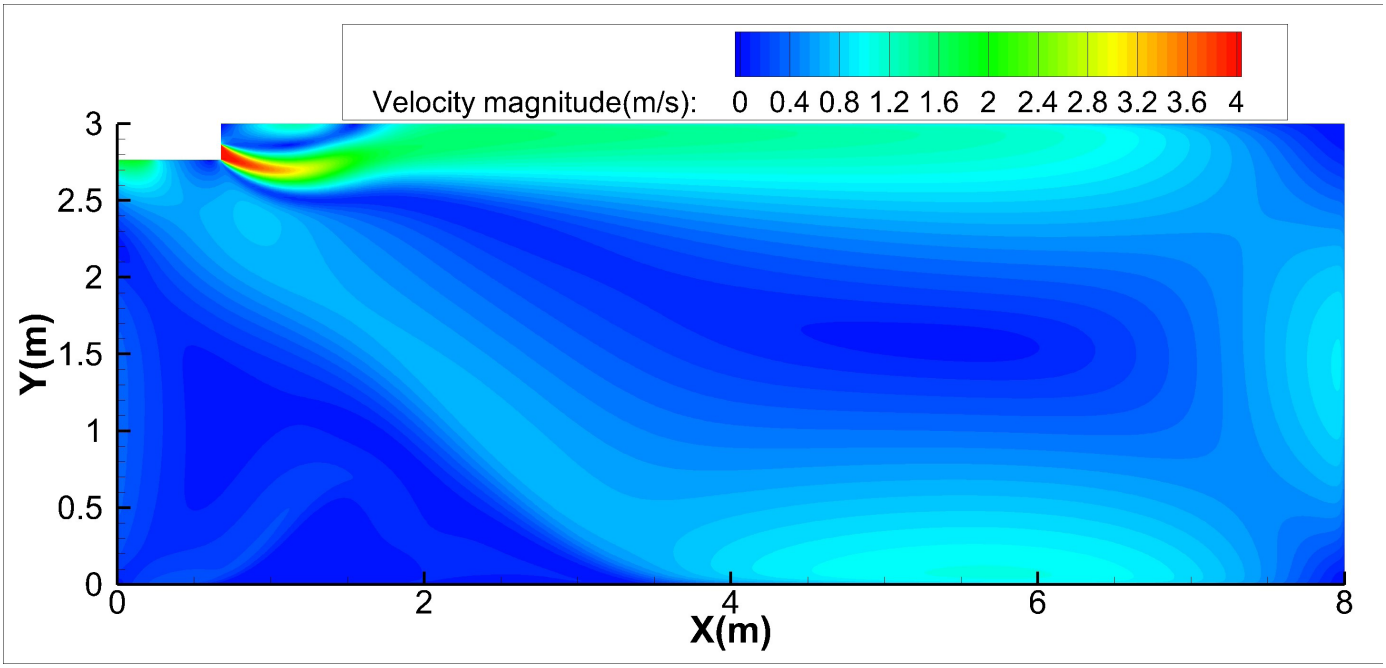

Heating temperature distributions

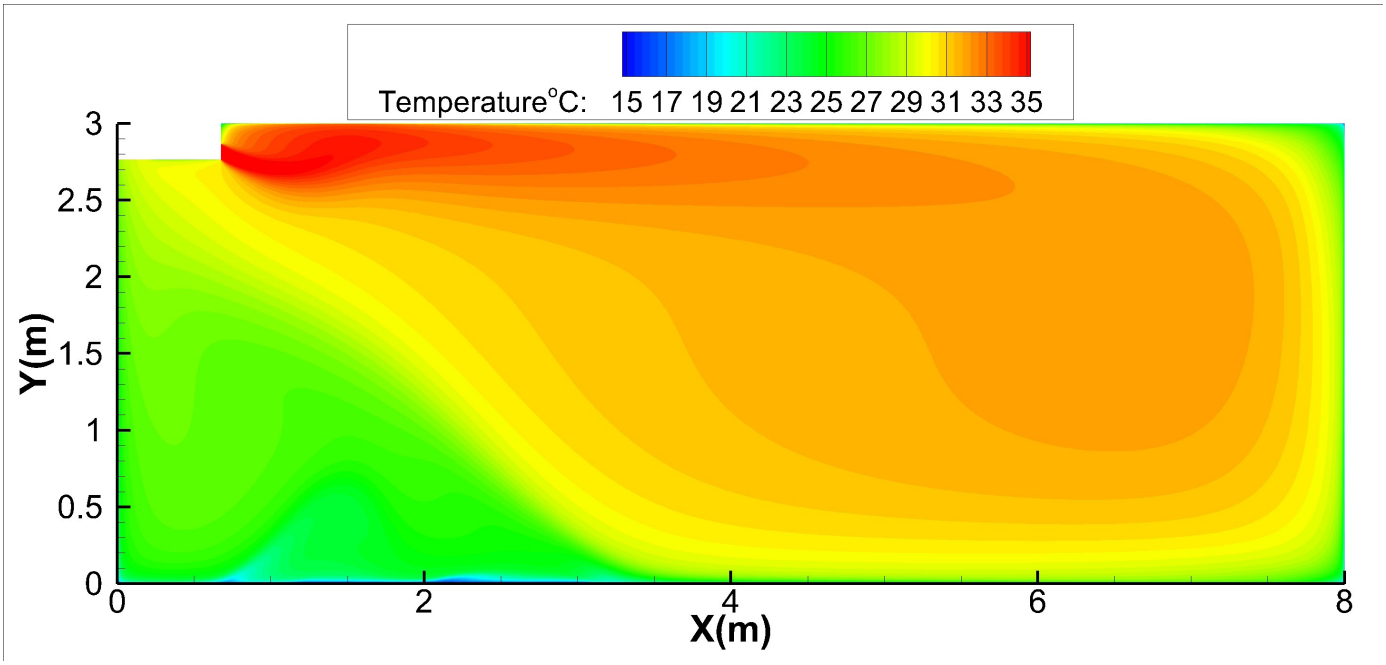

30K-Ceiling installation:

Discharge Angle 60°

Heating airflow velocity distributions

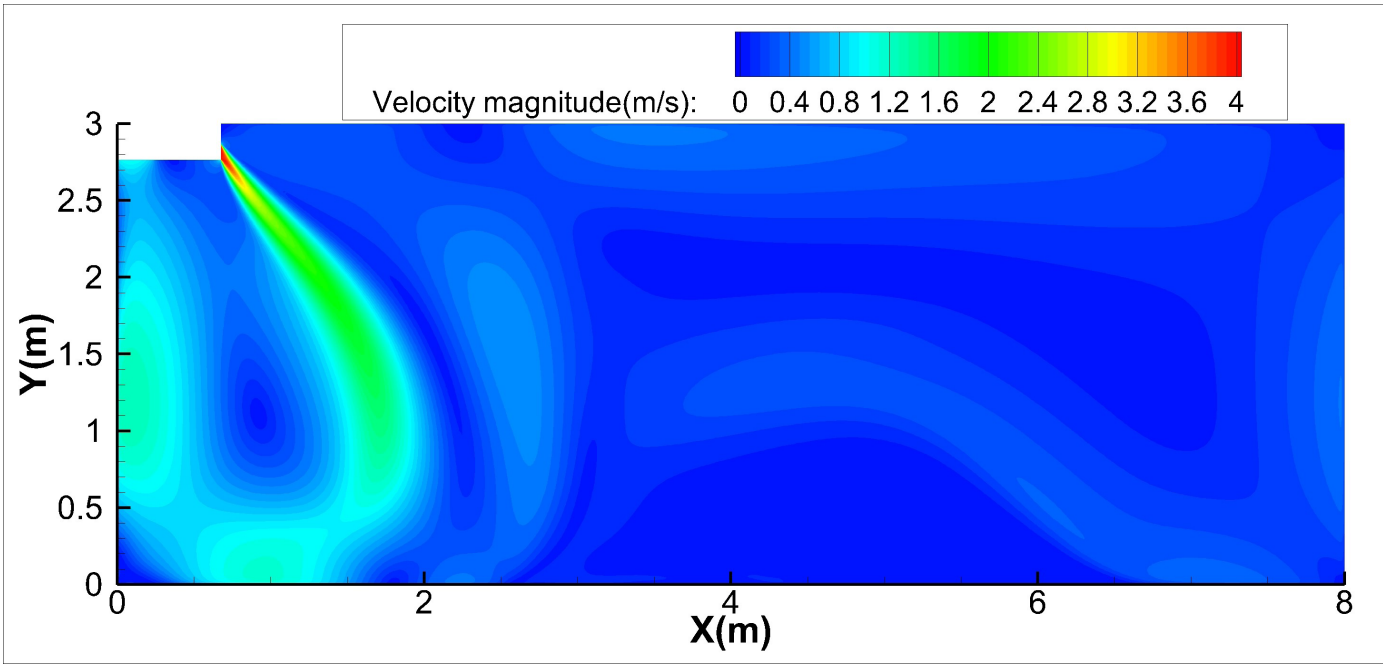

Heating temperature distributions

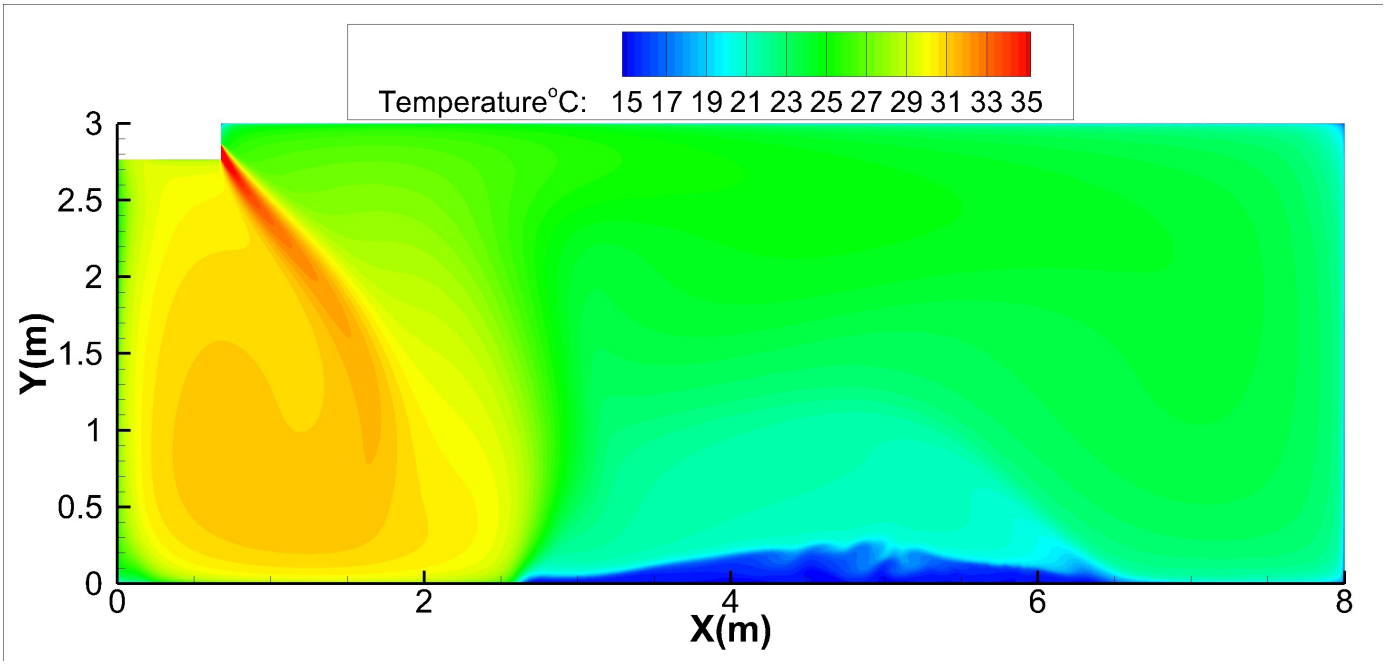

30K-Floor installation:

Discharge Angle 30°

Cooling airflow velocity distributions

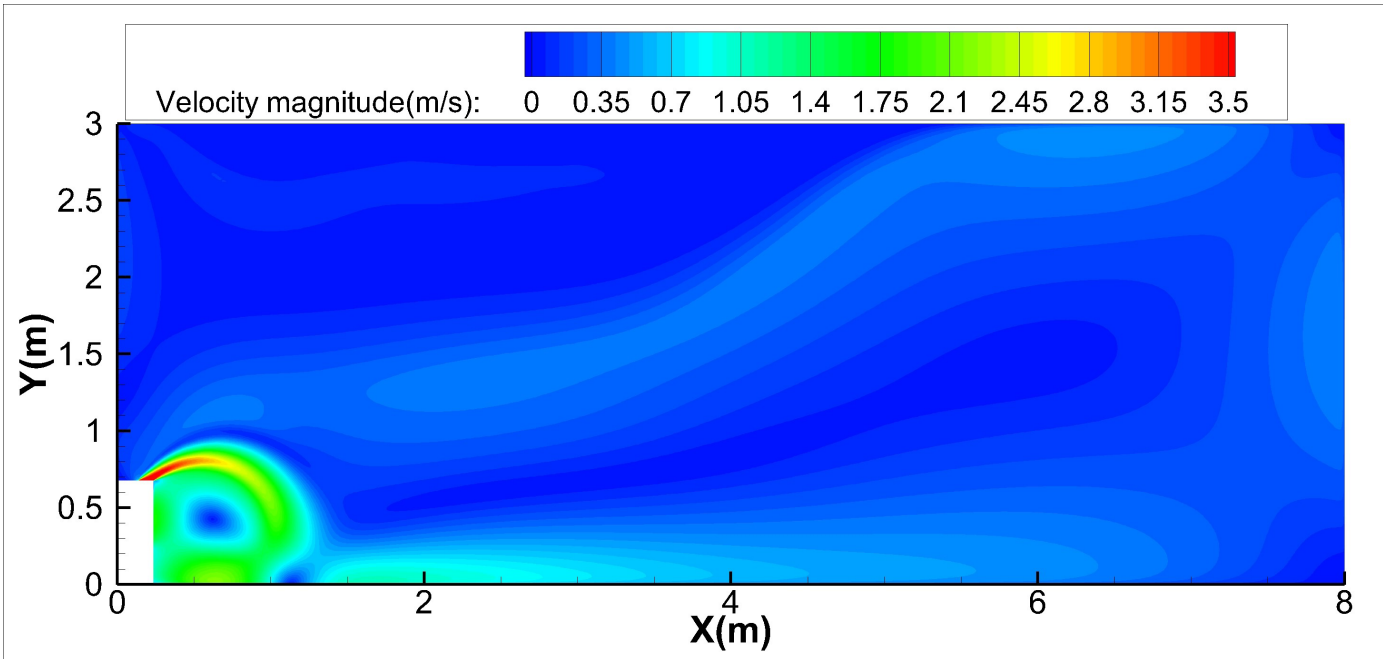

Cooling temperature distributions

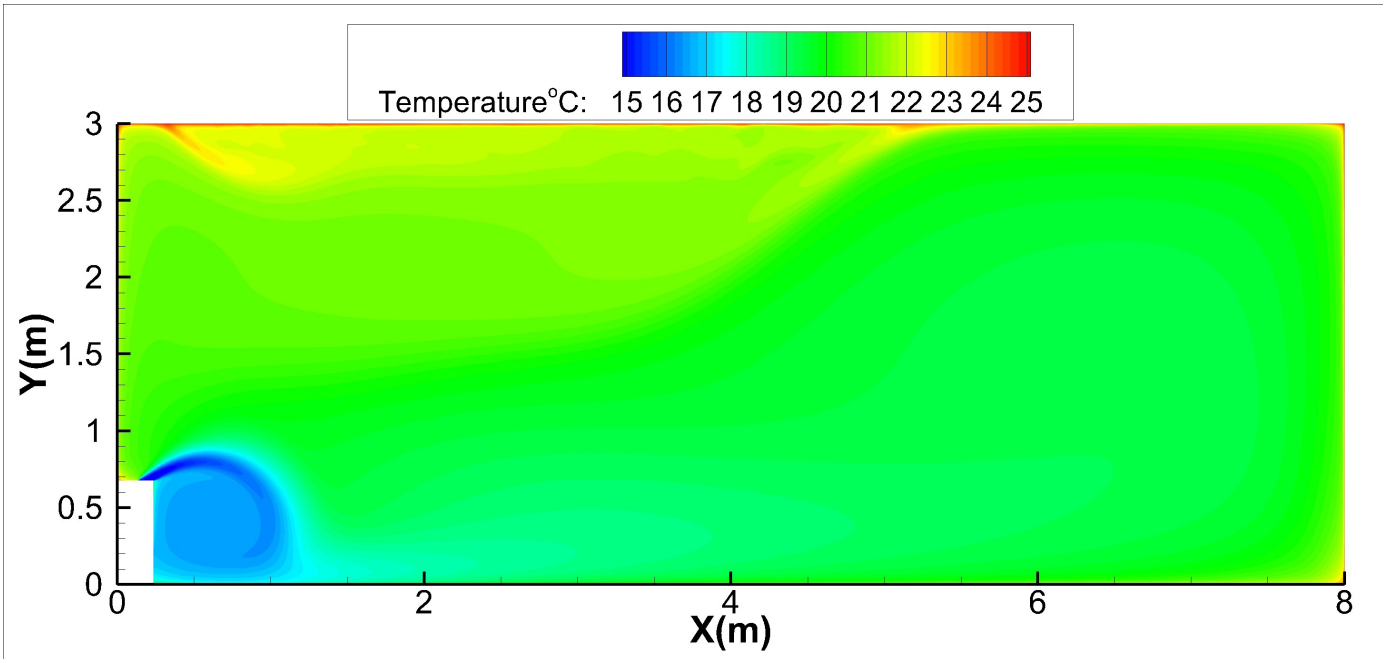

30K-Floor installation:

Discharge Angle 60°

Cooling airflow velocity distributions

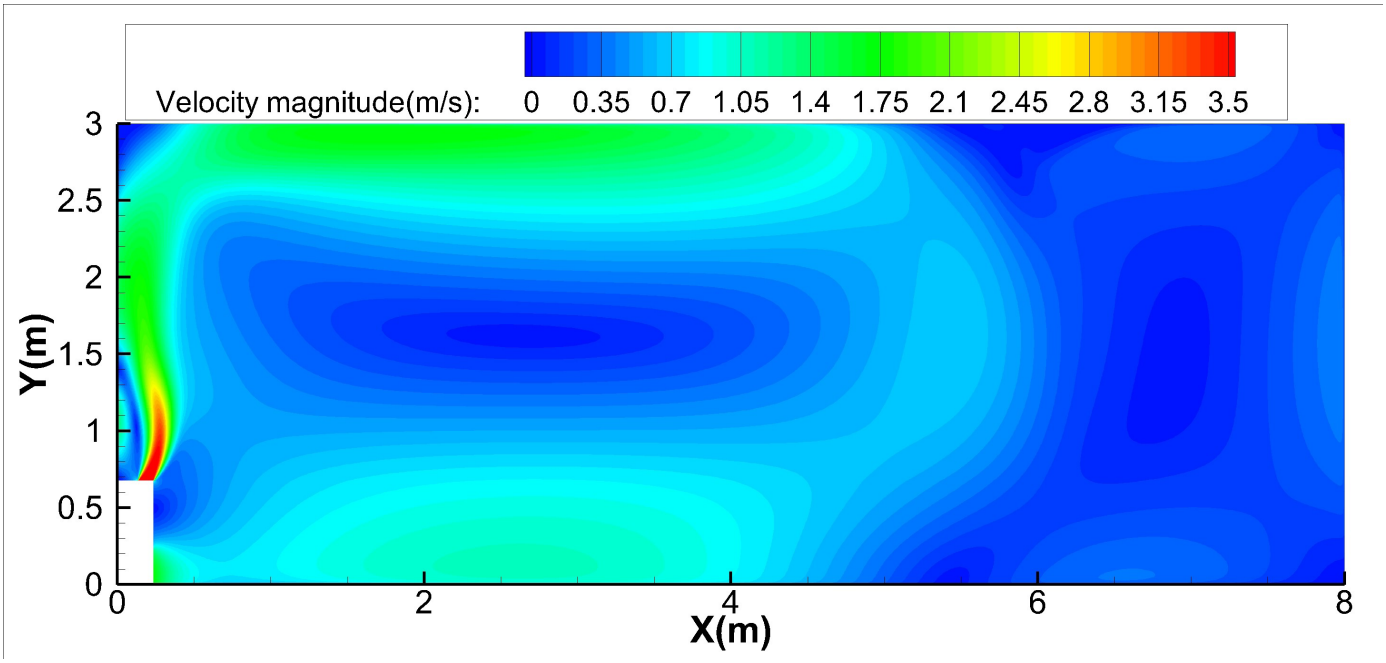

Cooling temperature distributions

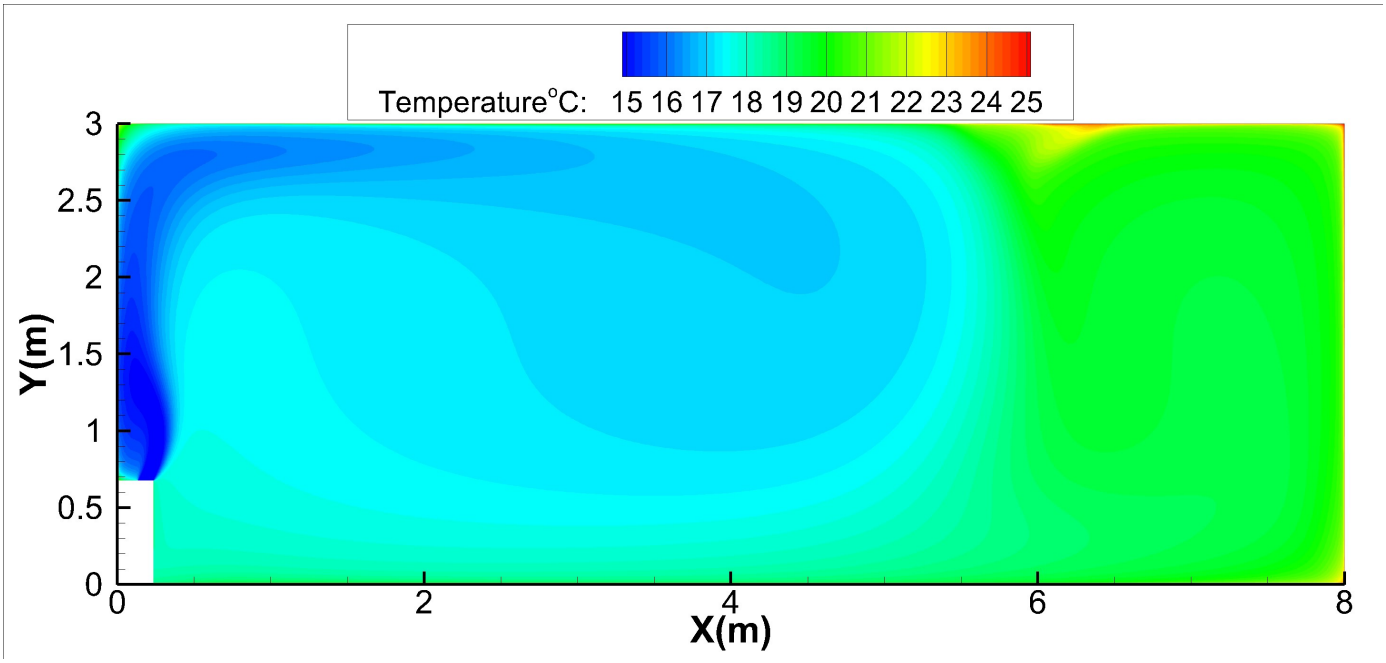

30K-Floor installation:

Discharge Angle 30°

Heating airflow velocity distributions

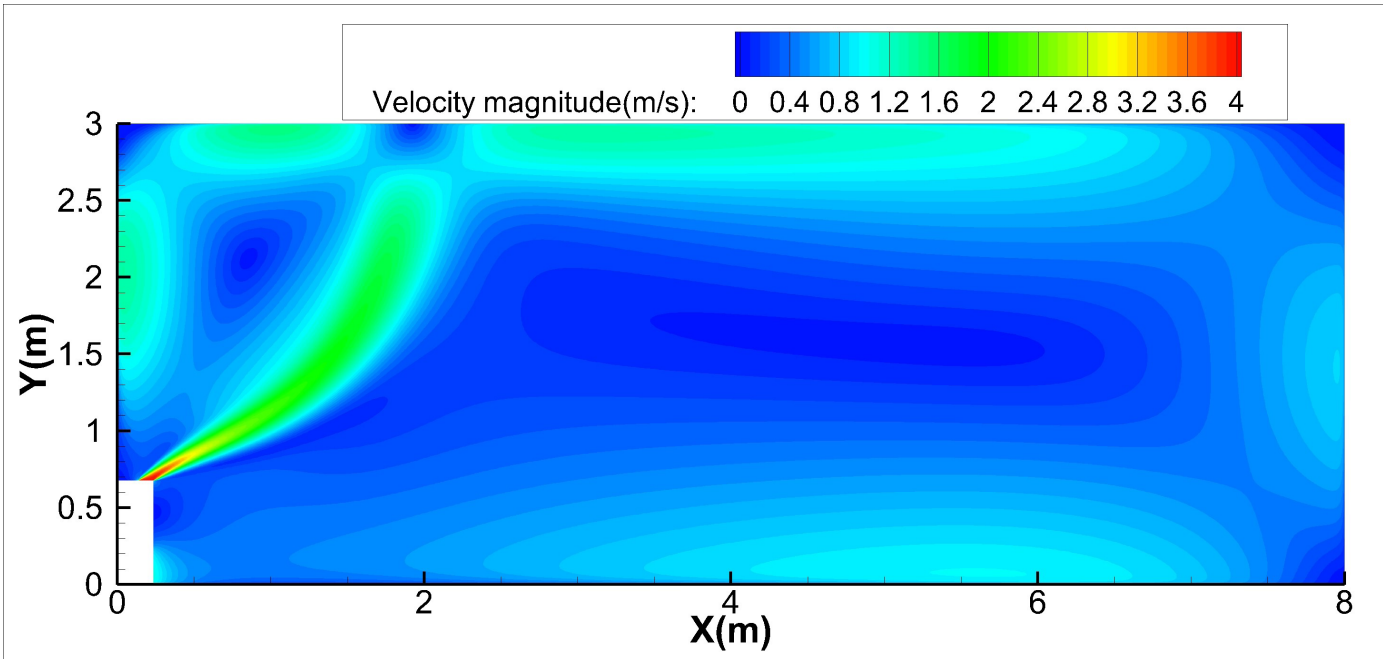

Heating temperature distributions

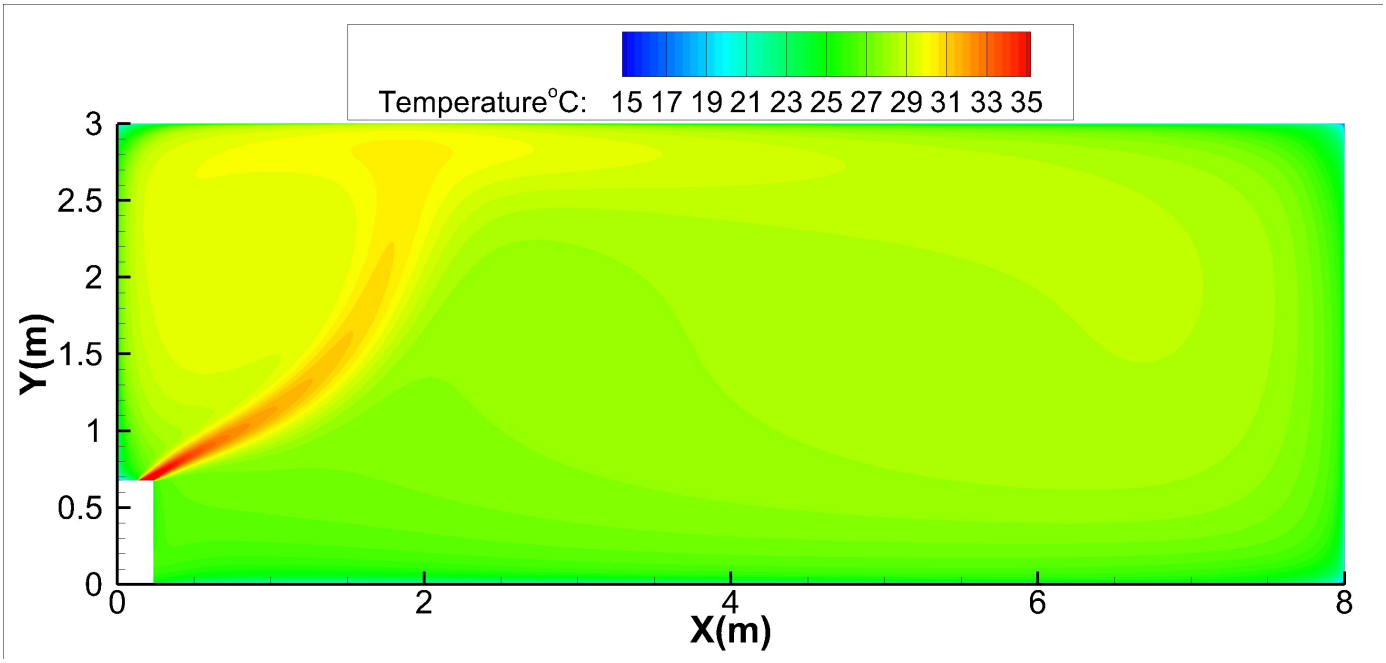

30K-Floor installation:

Discharge Angle 60°

Heating airflow velocity distributions

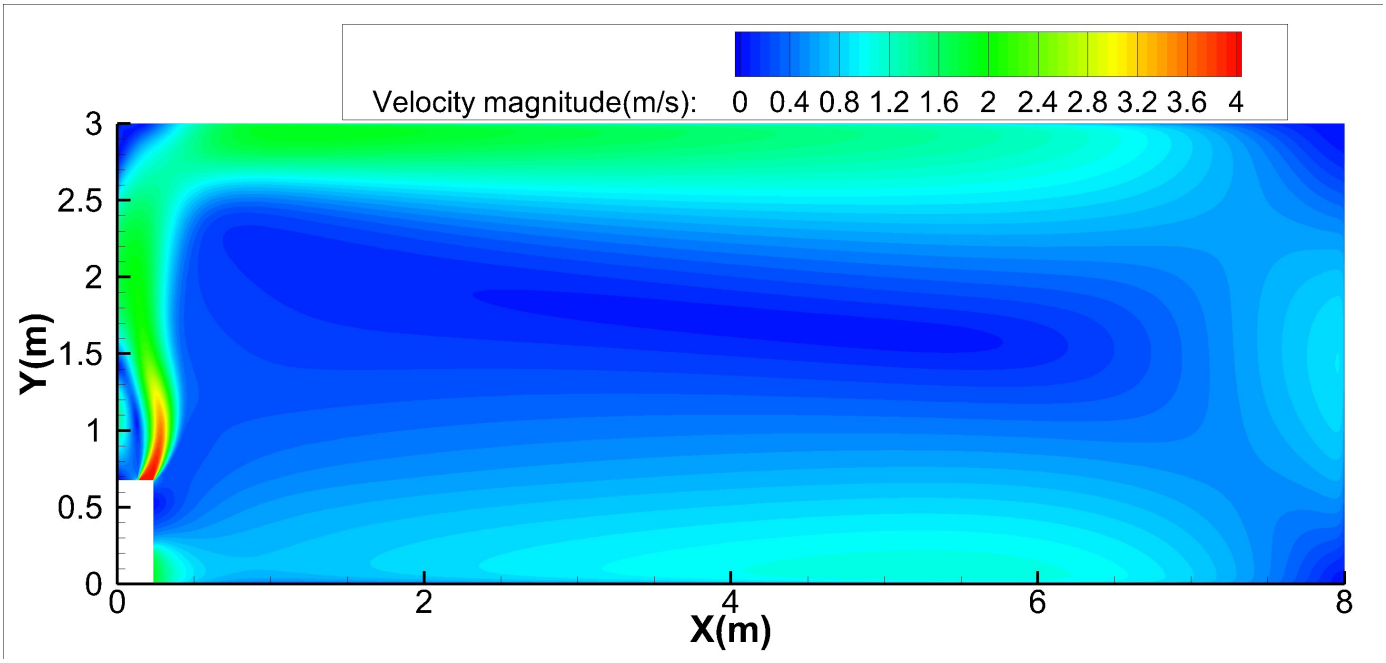

Heating temperature distributions

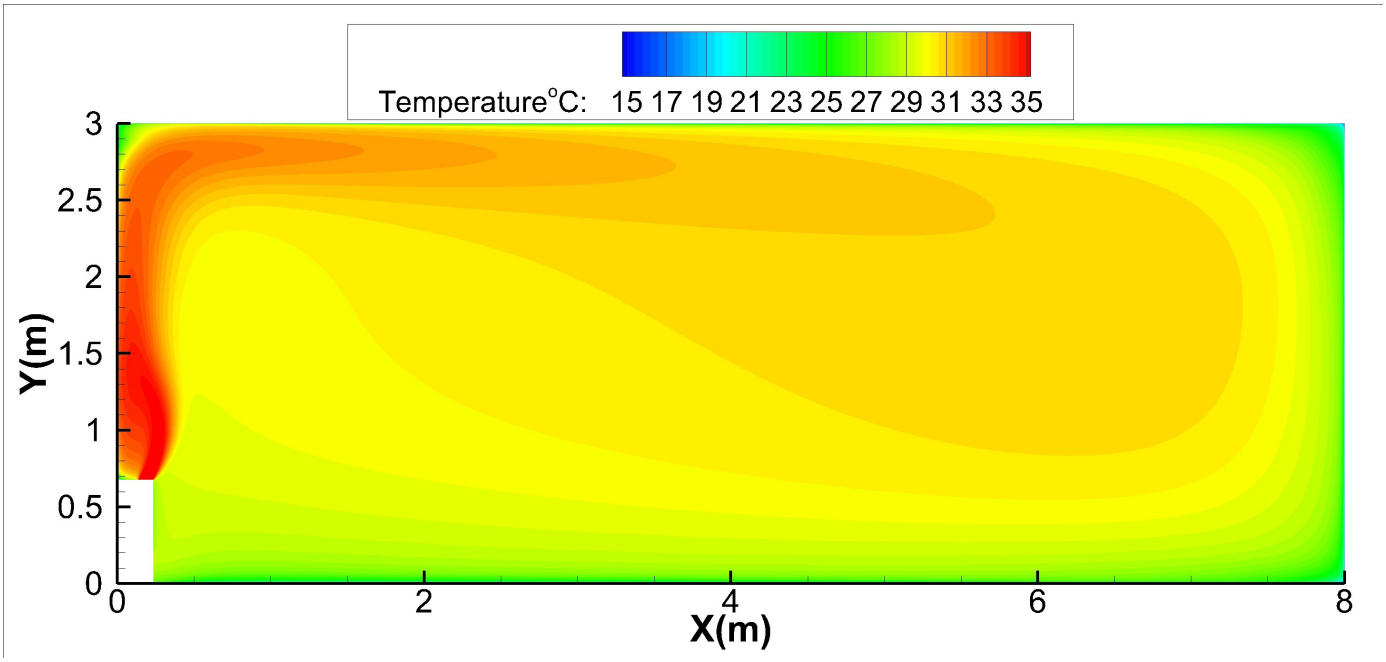

36K-Ceiling installation:

Discharge Angle 30°

Cooling airflow velocity distributions

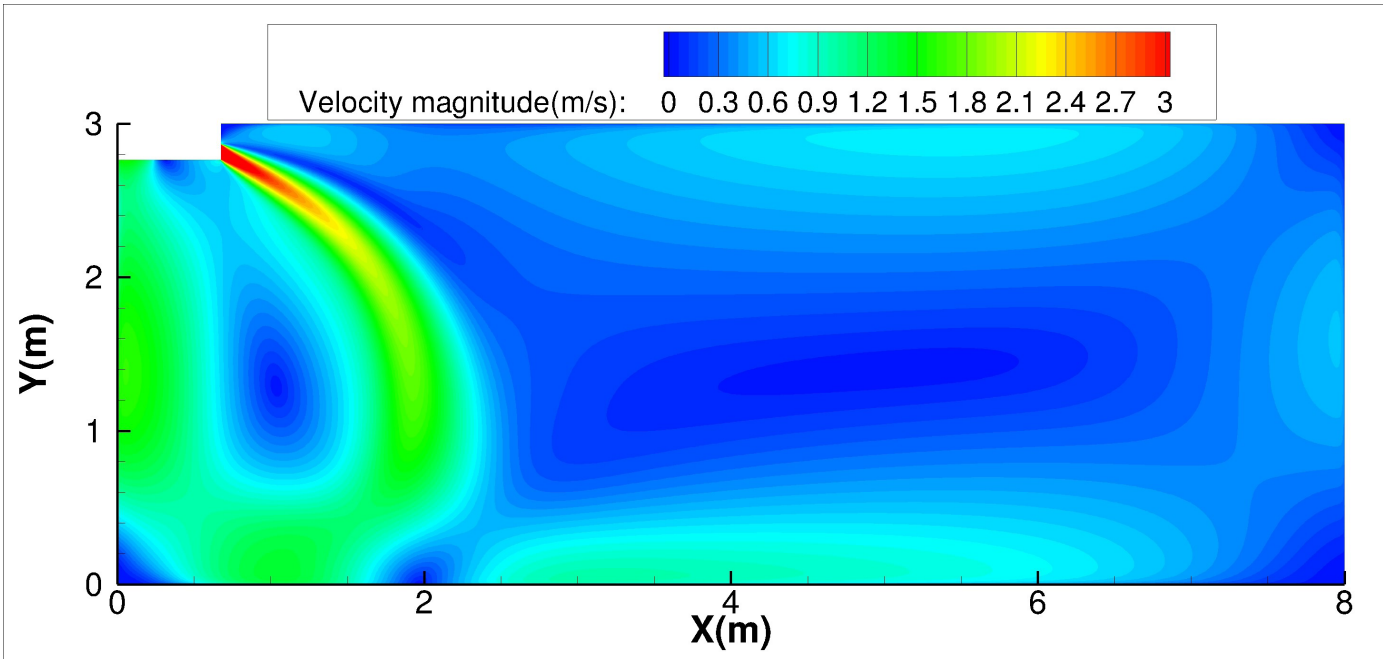

Cooling temperature distributions

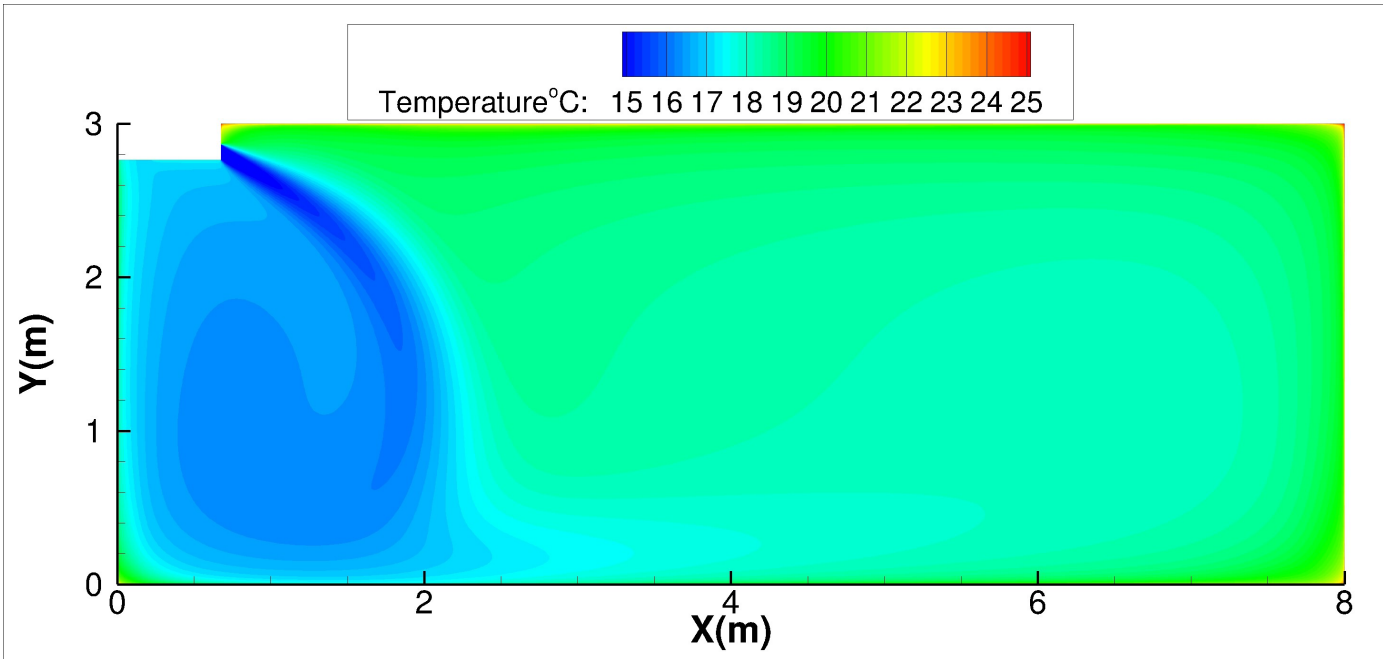

36K-Ceiling installation:

Discharge Angle 60°

Cooling airflow velocity distributions

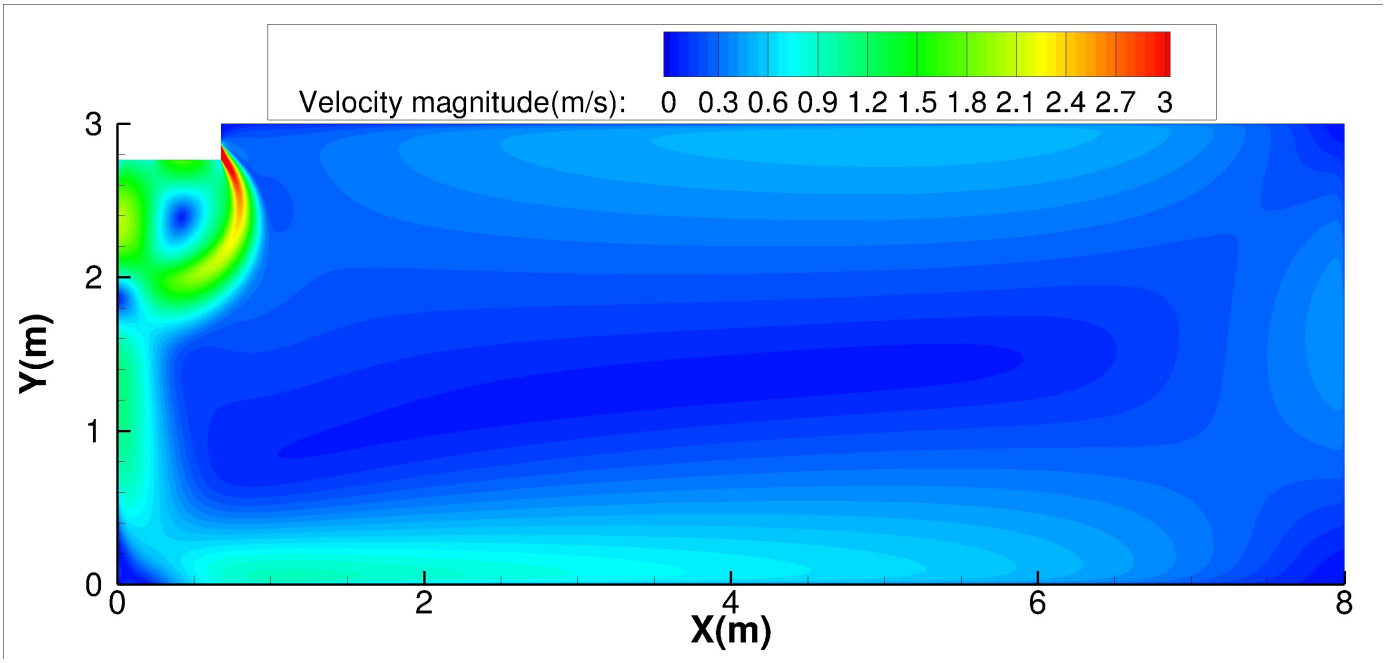

Cooling temperature distributions

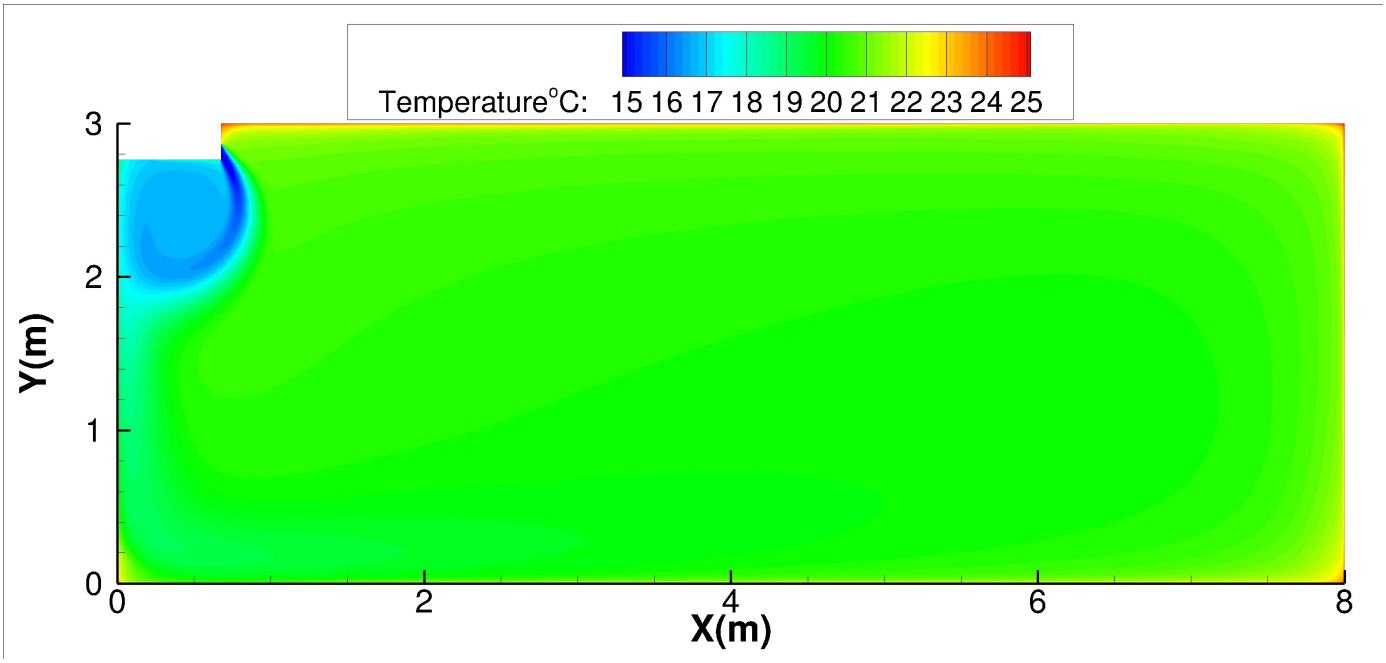

36K-Ceiling installation:

Discharge Angle 30°

Heating airflow velocity distributions

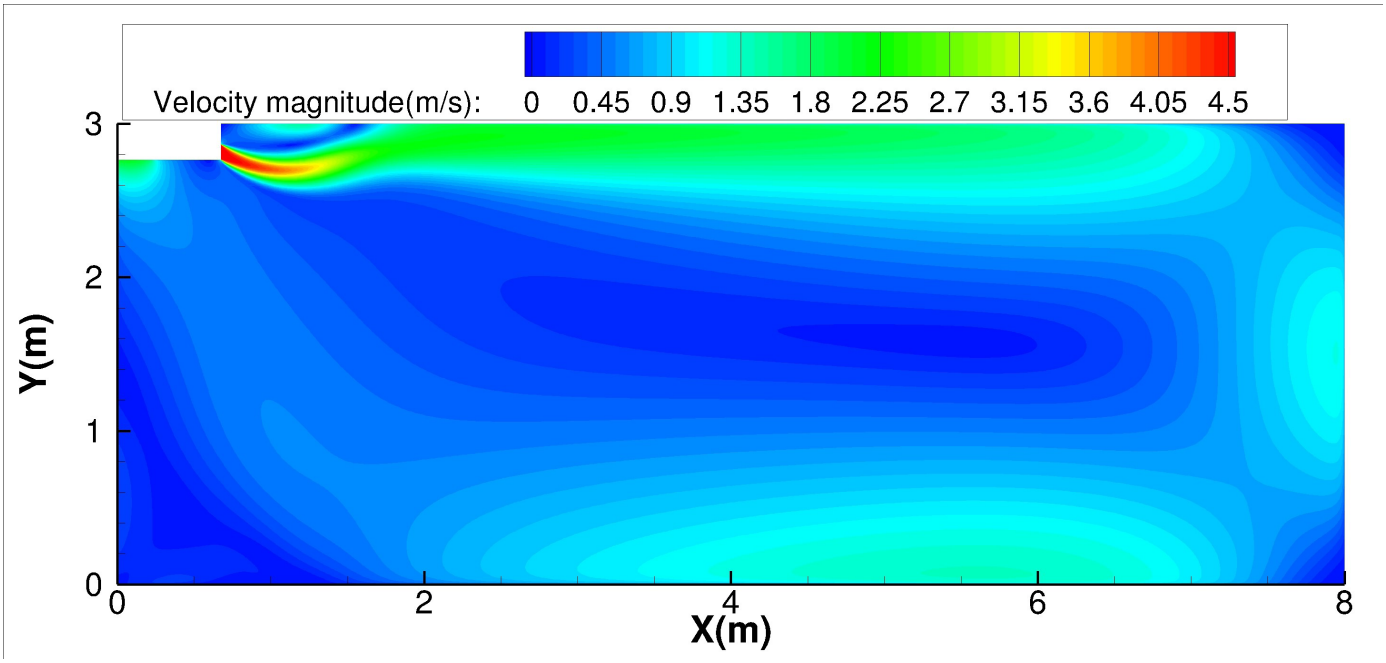

Heating temperature distributions

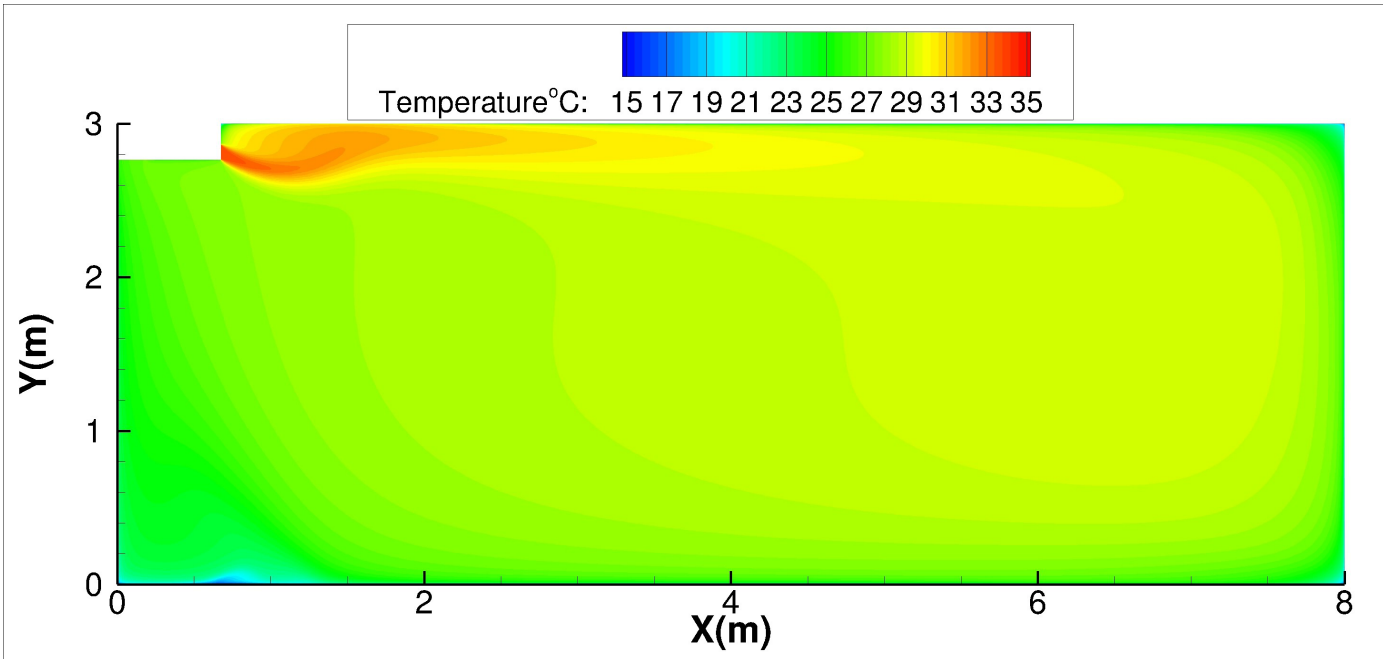

36K-Ceiling installation:

Discharge Angle 60°

Heating airflow velocity distributions

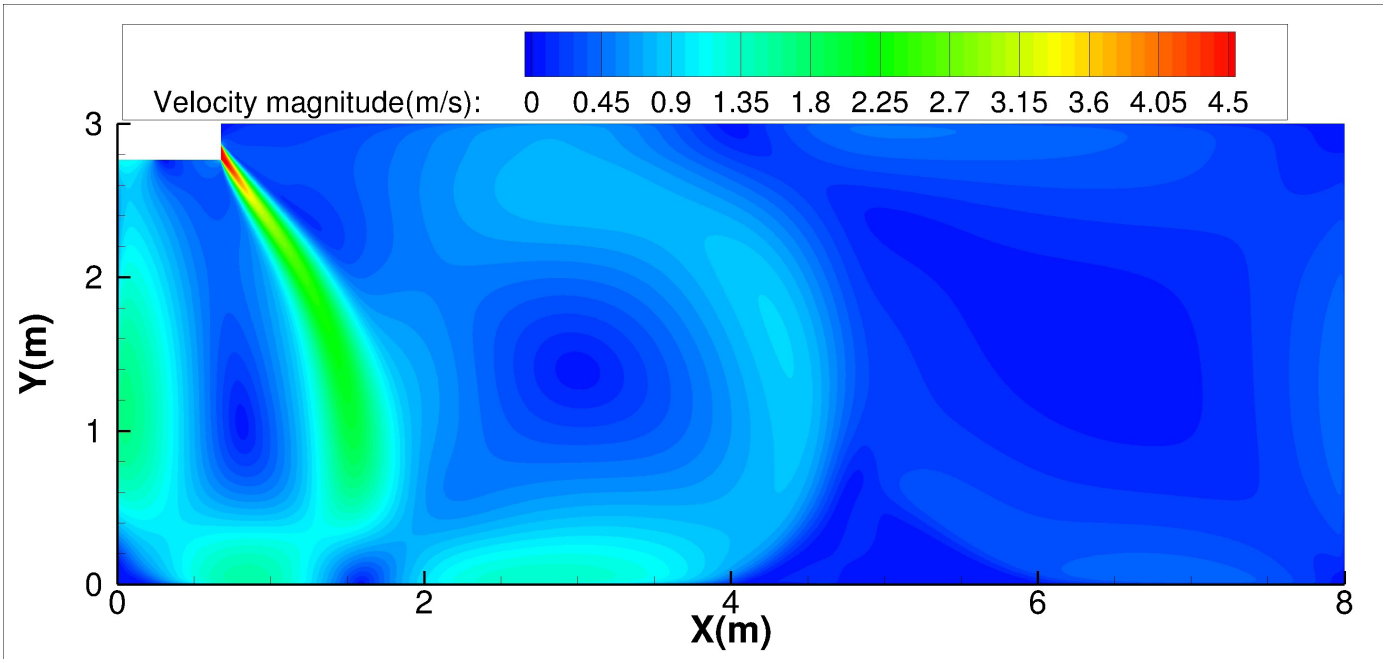

Heating temperature distributions

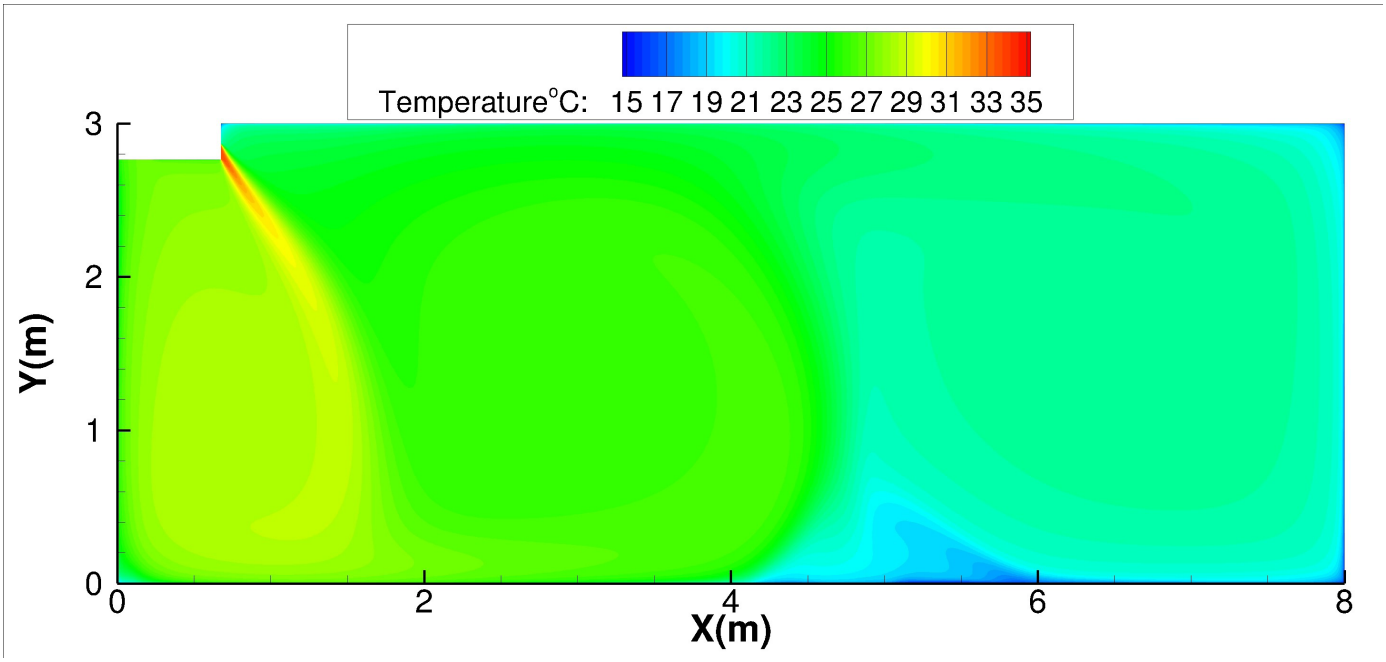

36K-Floor installation:

Discharge Angle 30°

Cooling airflow velocity distributions

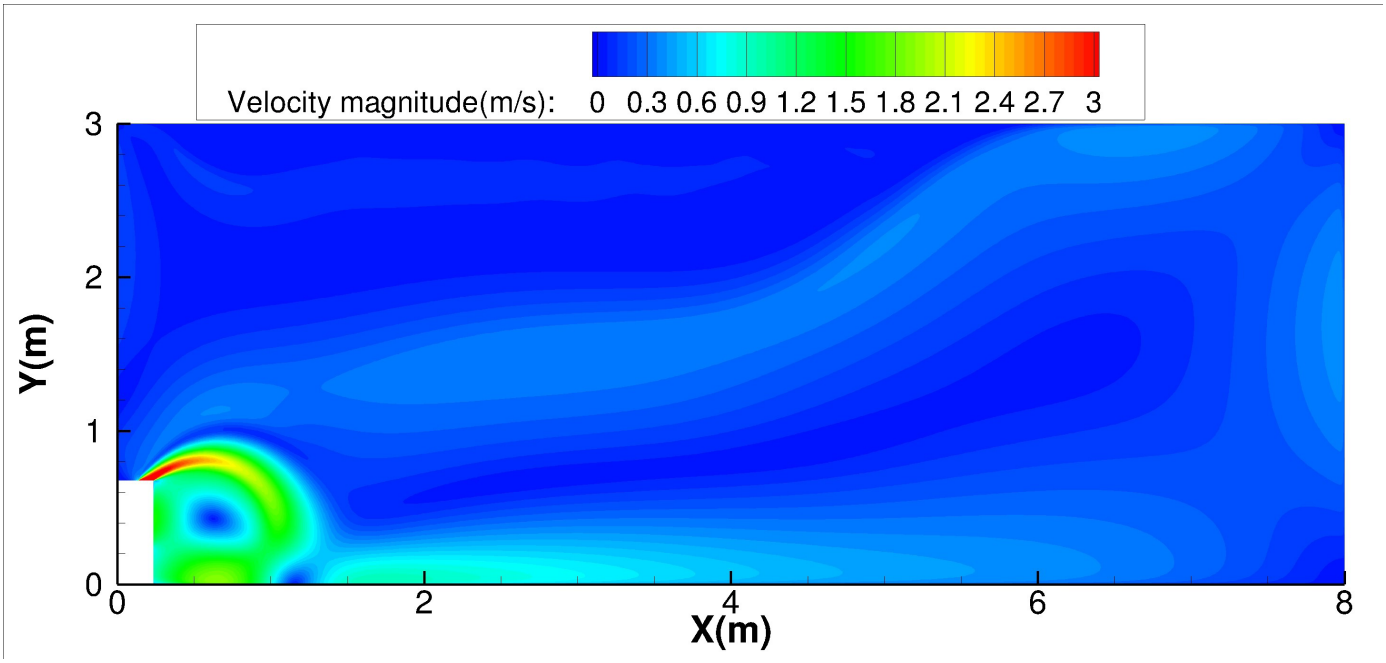

Cooling temperature distributions

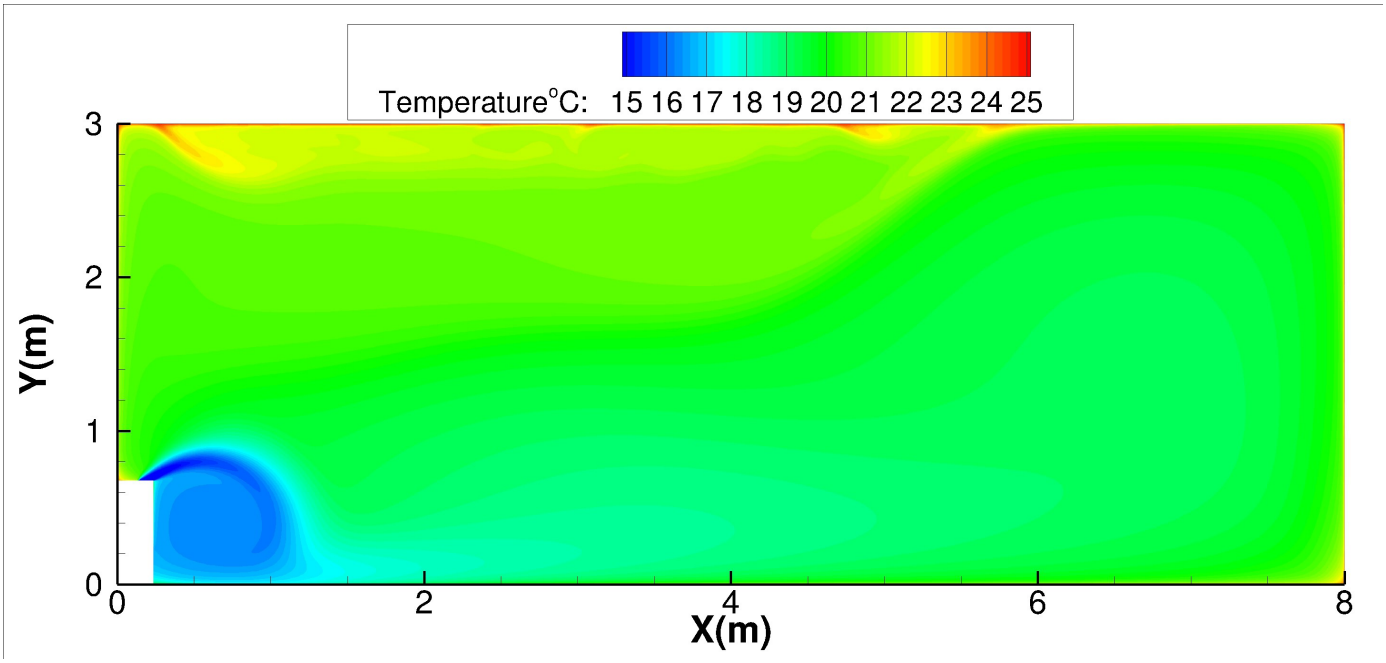

36K-Floor installation:

Discharge Angle 60°

Cooling airflow velocity distributions

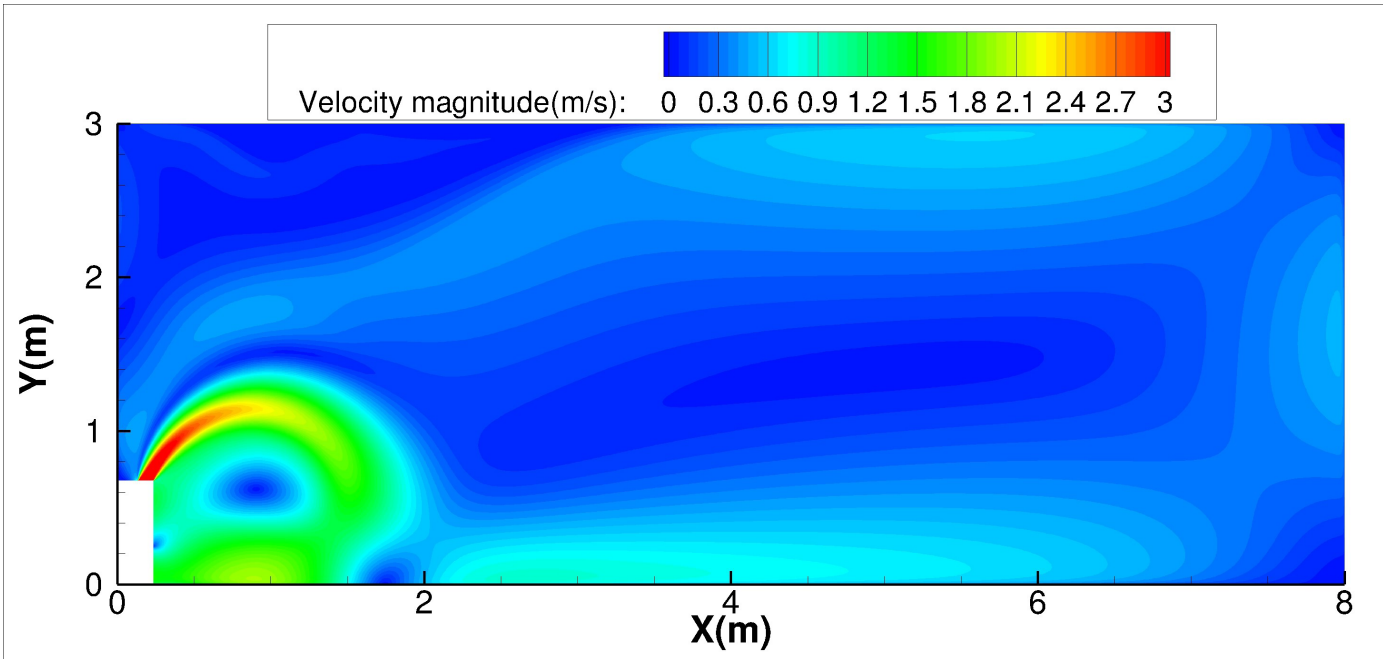

Cooling temperature distributions

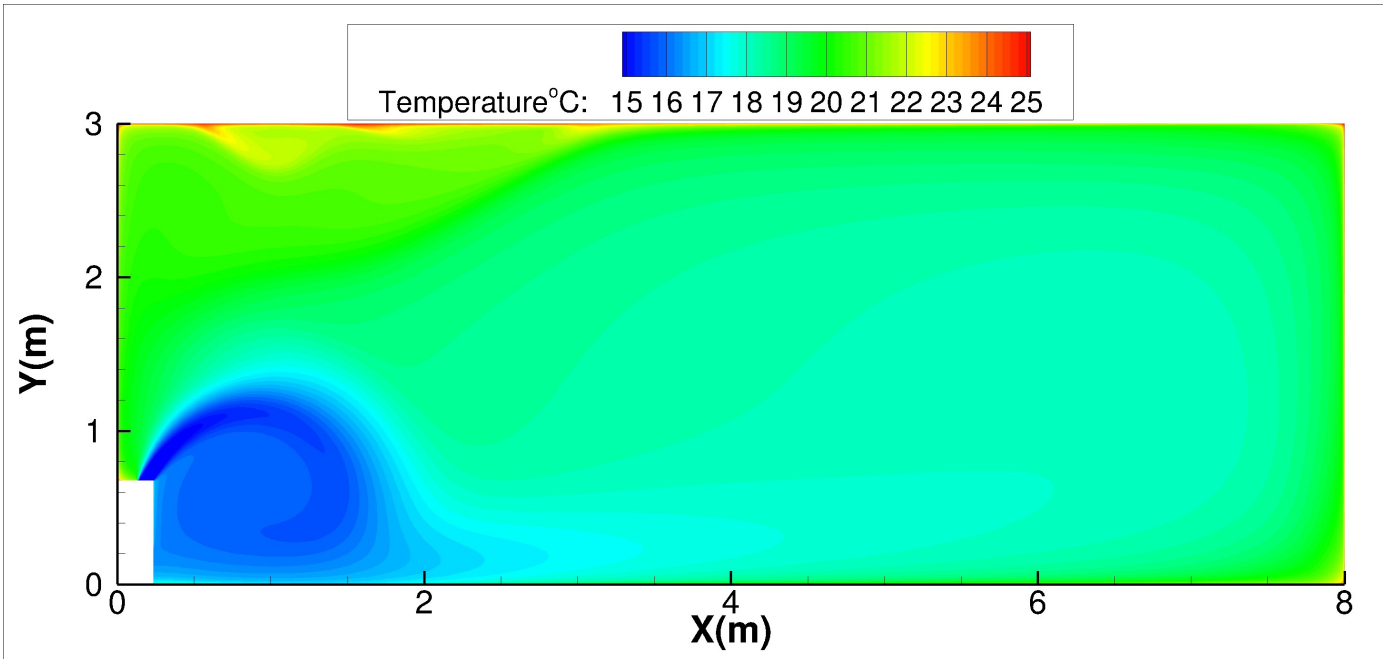

36K-Floor installation:

Discharge Angle 30°

Heating airflow velocity distributions

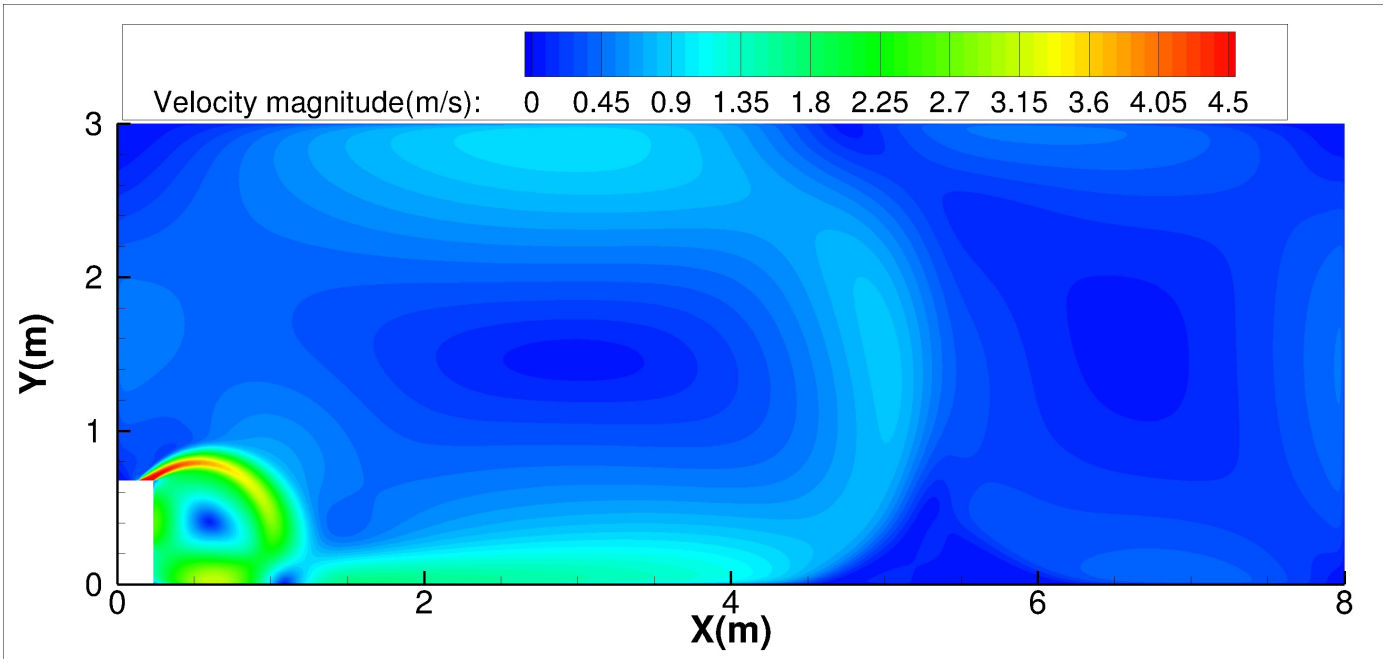

Heating temperature distributions

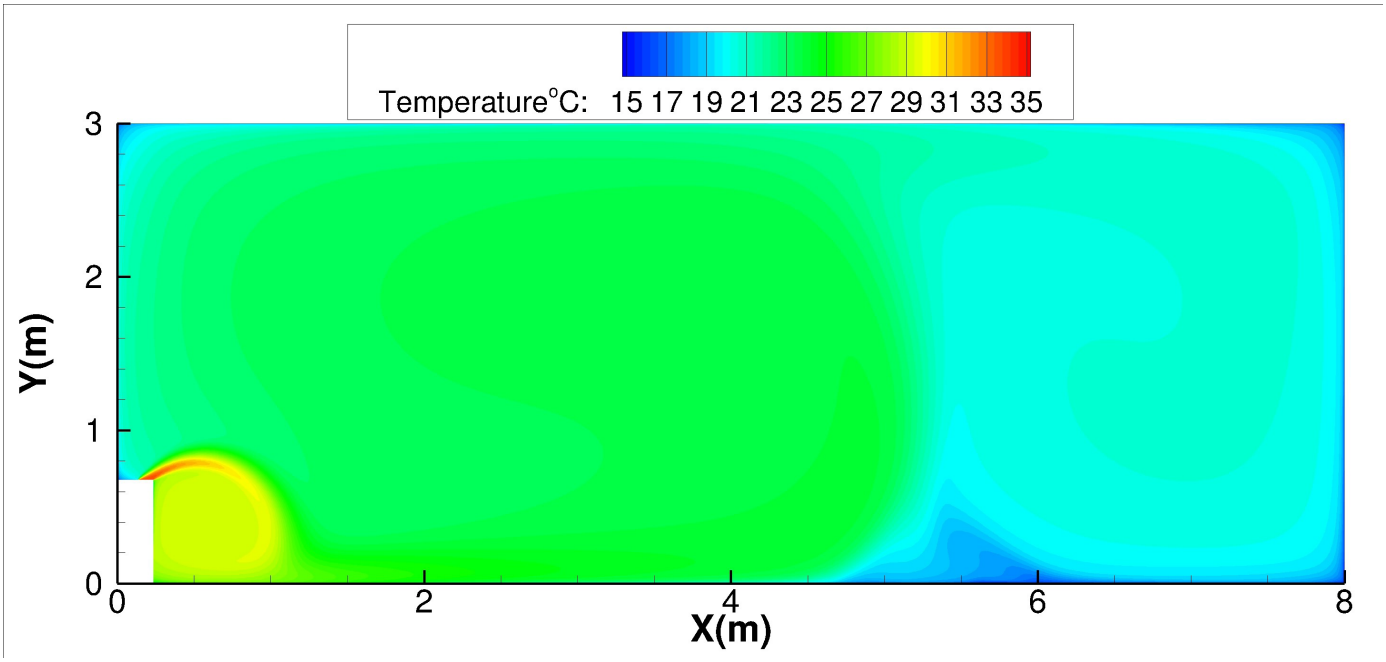

36K-Floor installation:

Discharge Angle 60°

Heating airflow velocity distributions

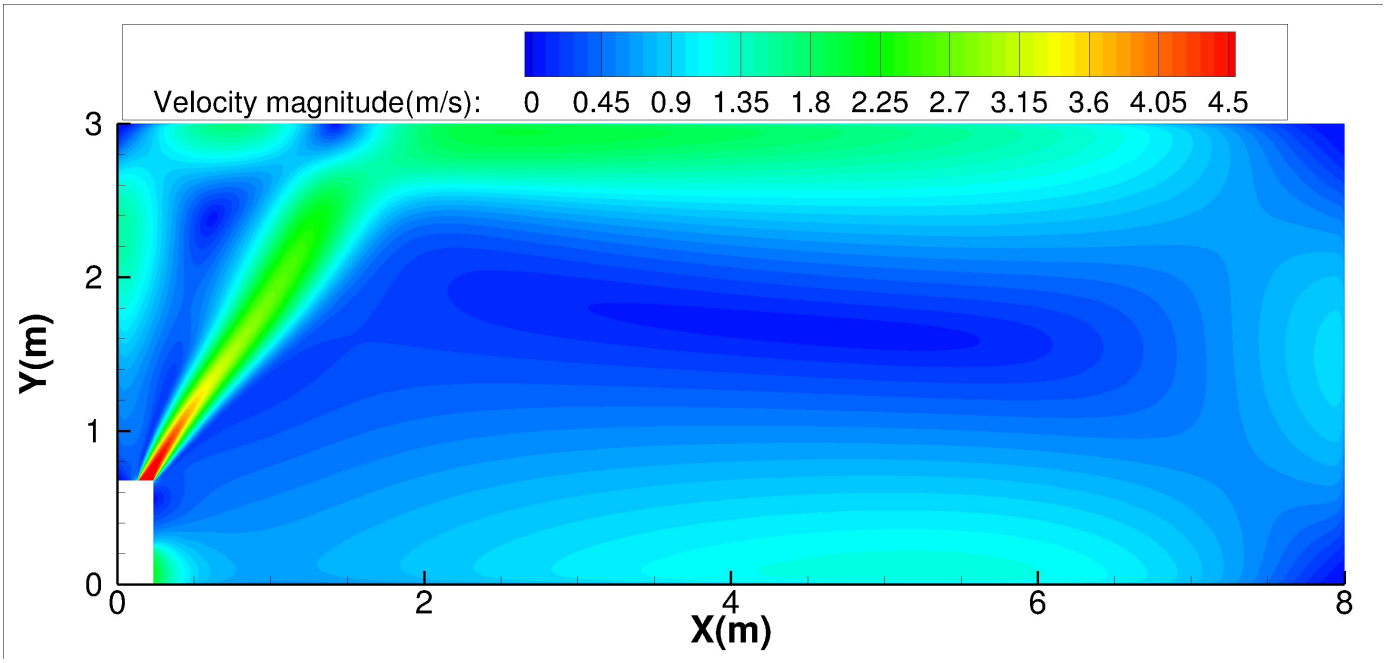

Heating temperature distributions

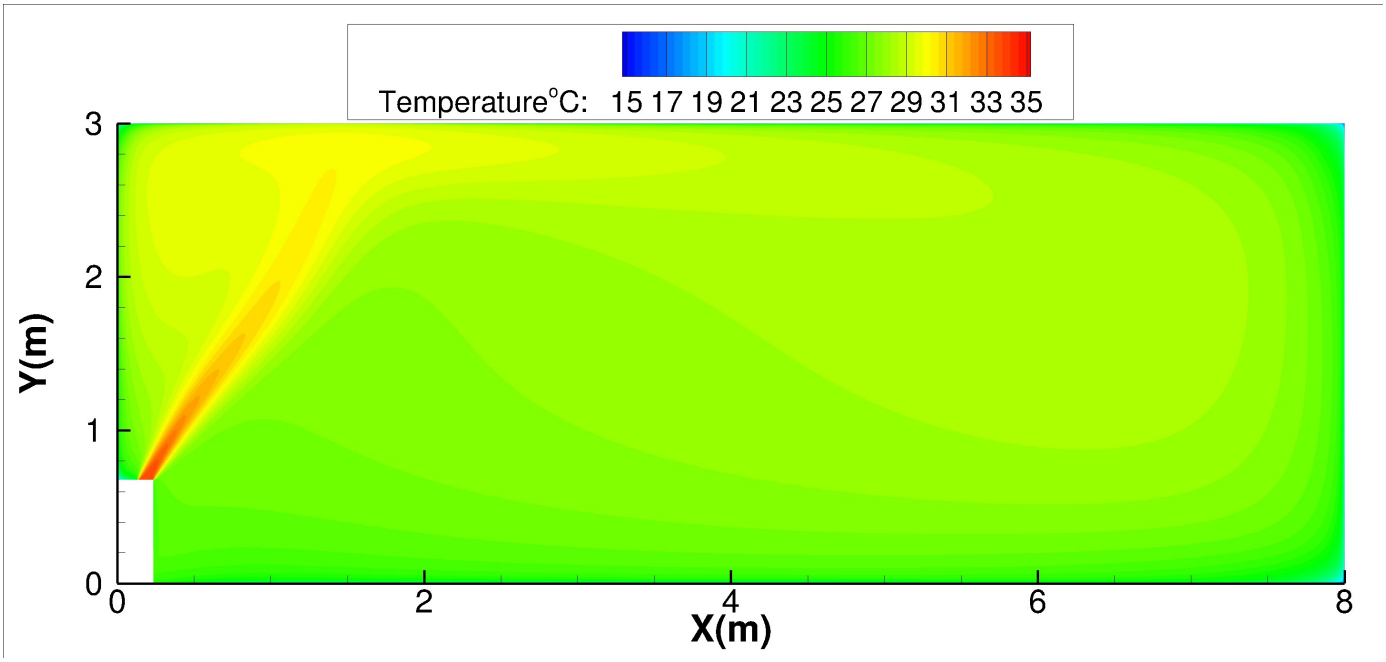

42K-Ceiling installation:

Discharge Angle 30°

Cooling airflow velocity distributions

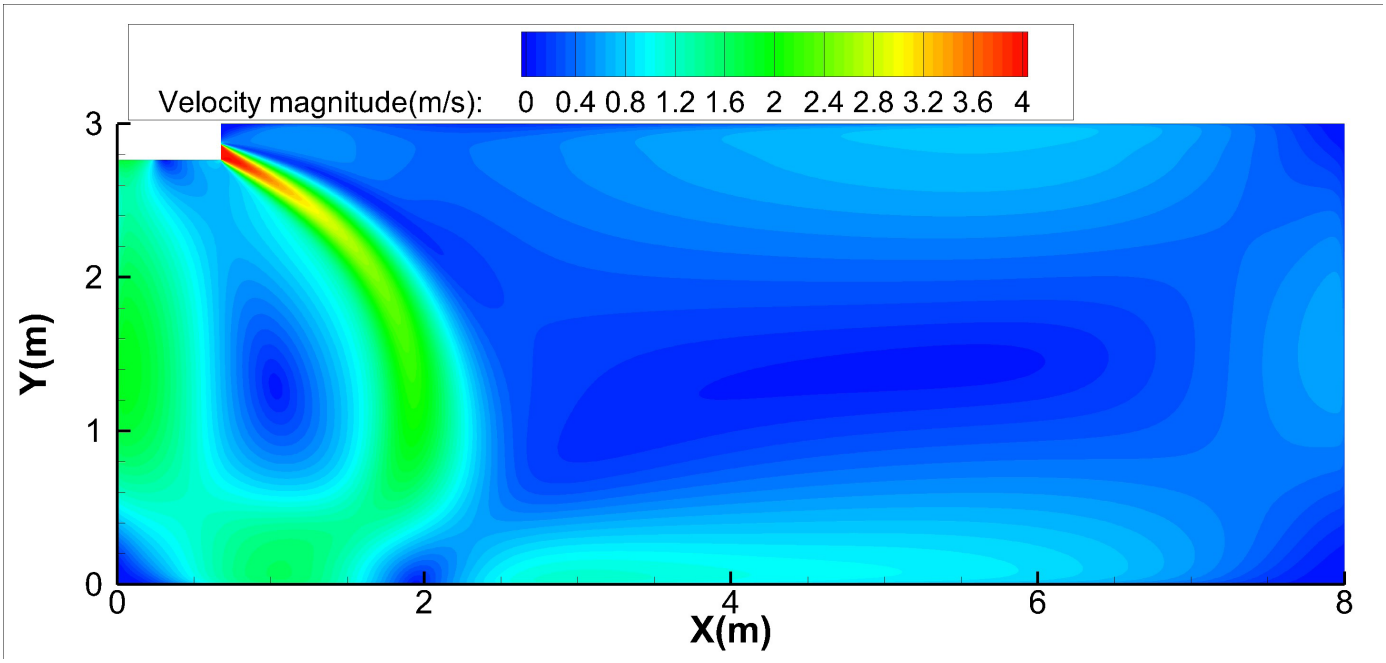

Cooling temperature distributions

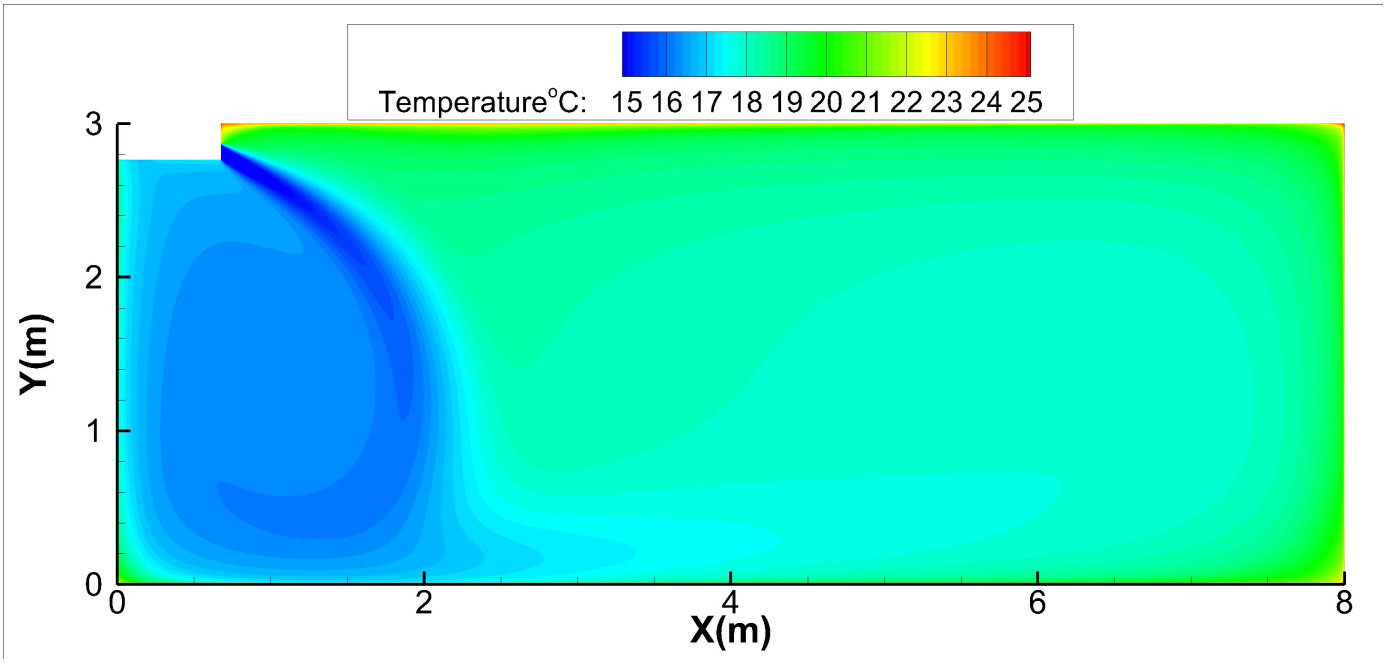

42K-Ceiling installation:

Discharge Angle 60°

Cooling airflow velocity distributions

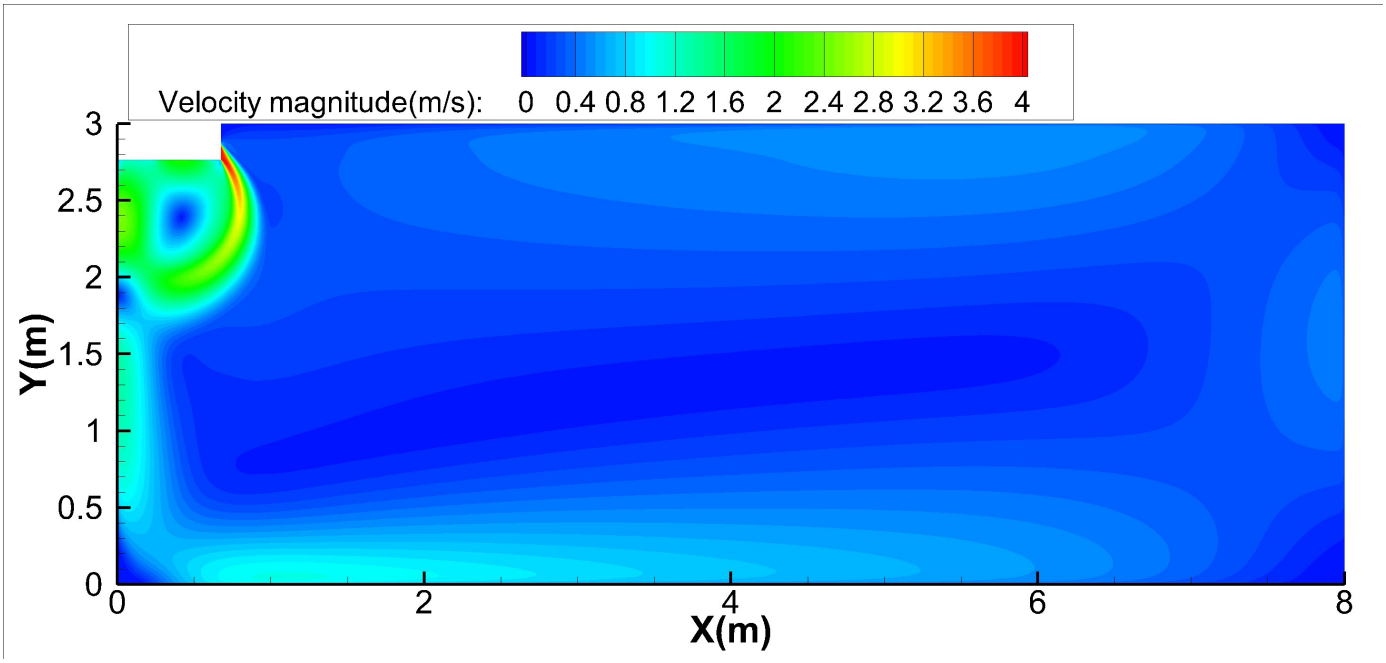

Cooling temperature distributions

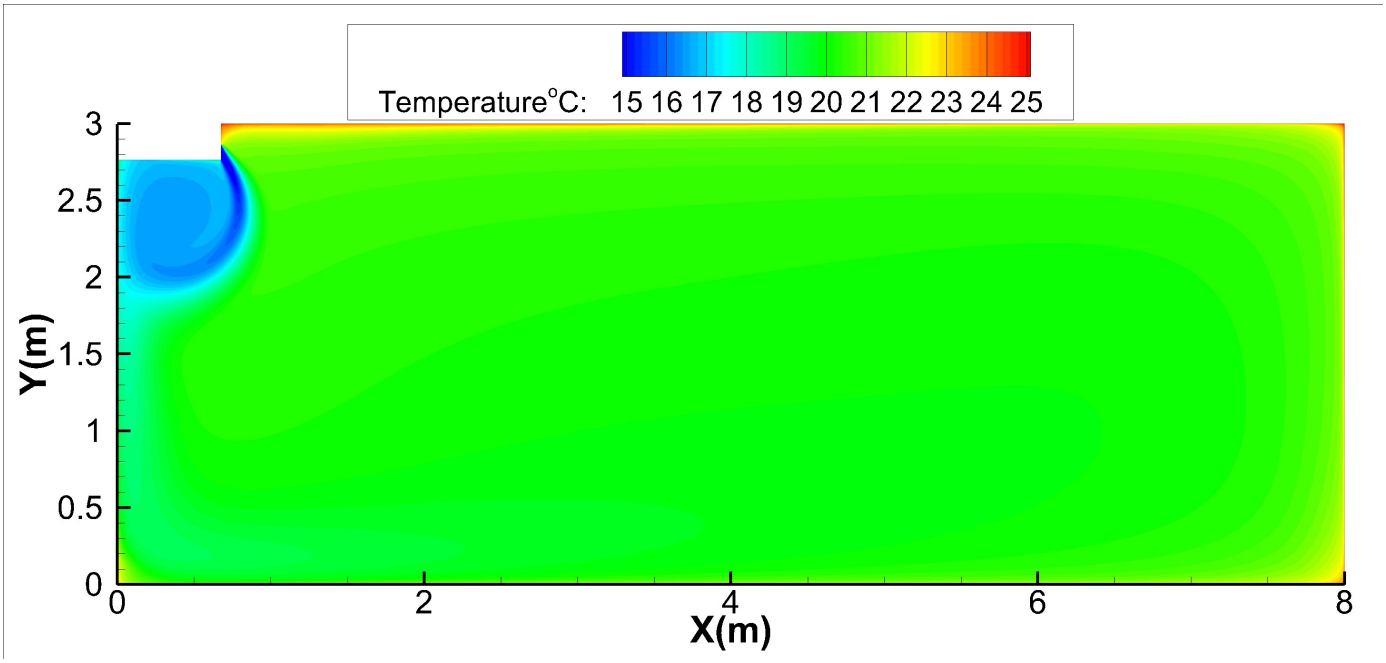

42K-Ceiling installation:

Discharge Angle 30°

Heating airflow velocity distributions

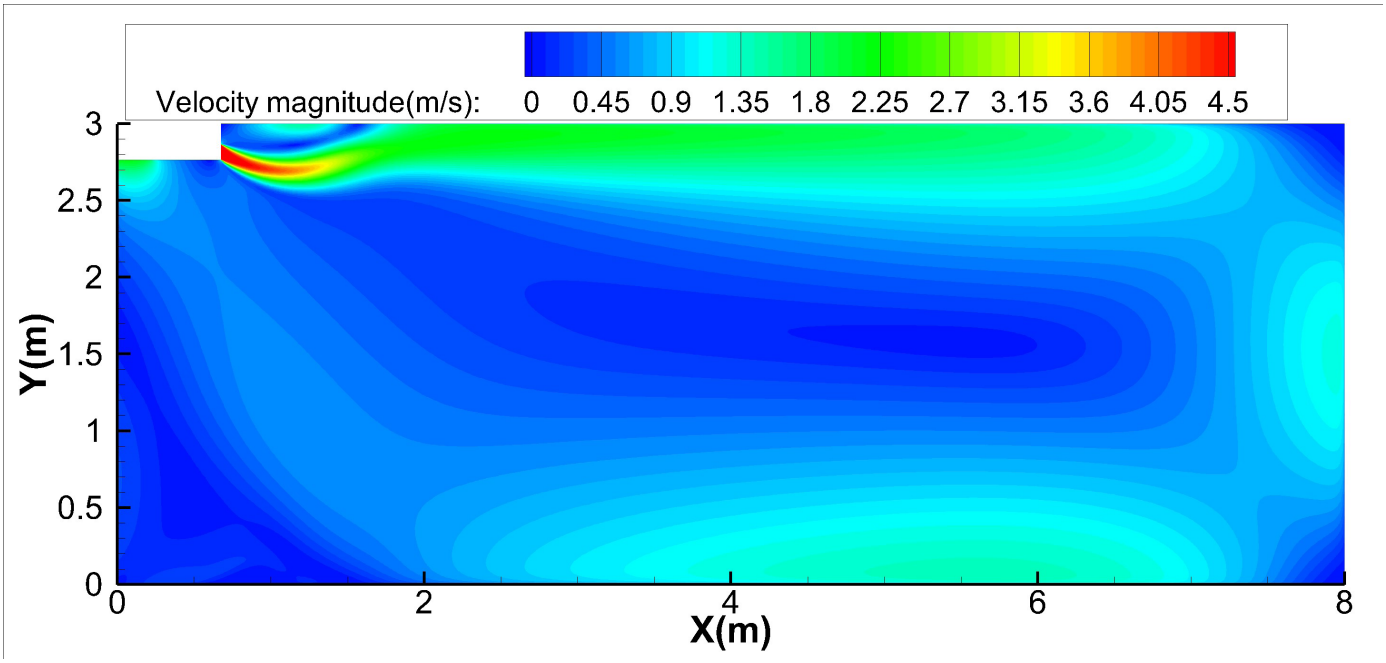

Heating temperature distributions

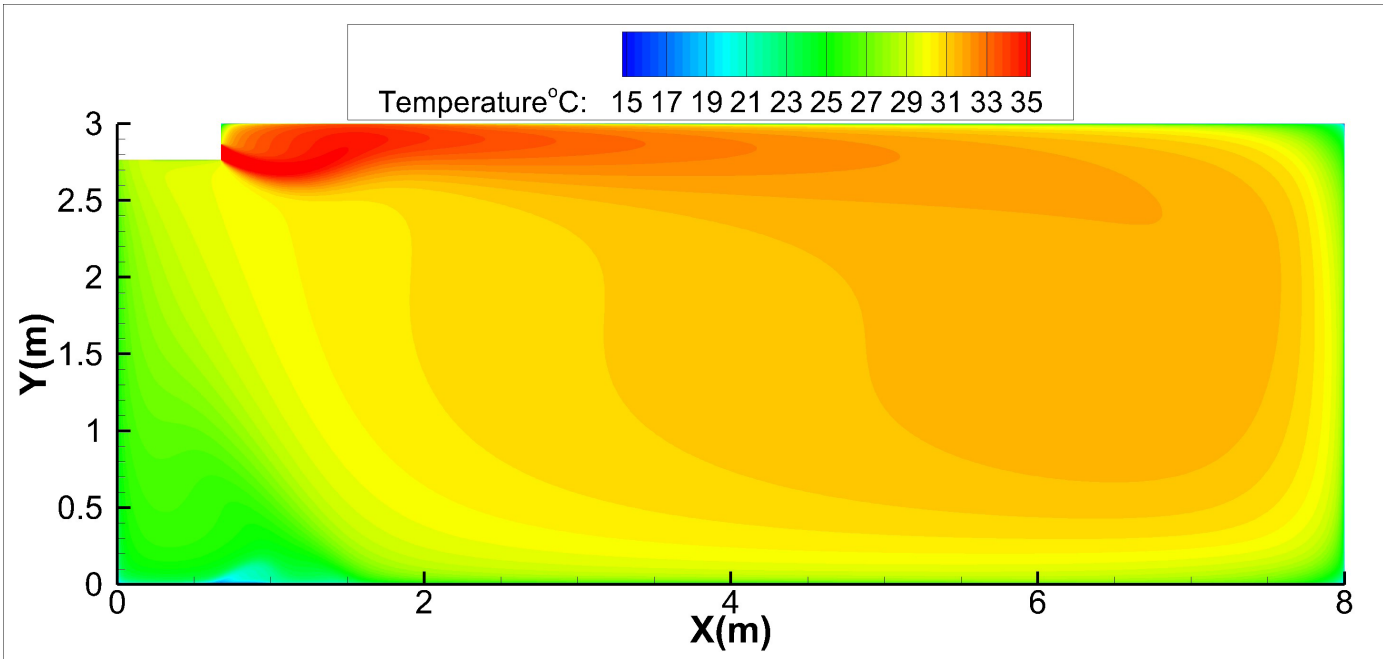

42K-Ceiling installation:

Discharge Angle 60°

Heating airflow velocity distributions

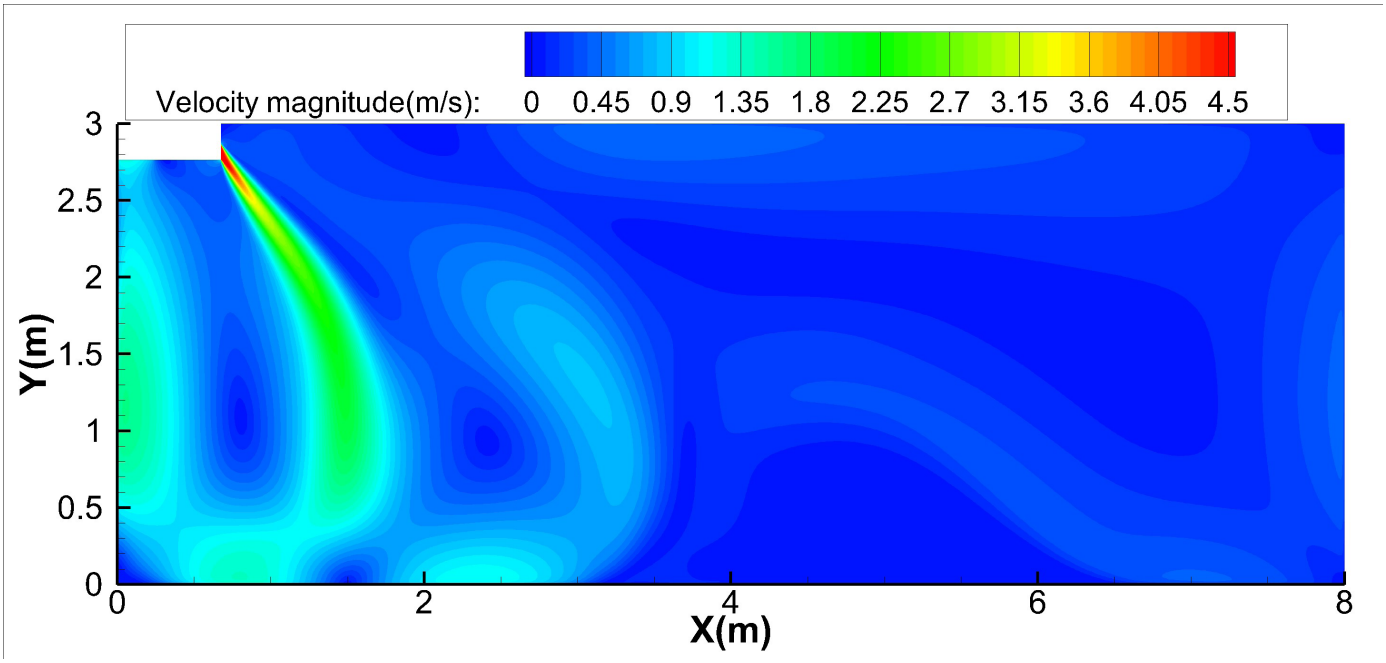

Heating temperature distributions

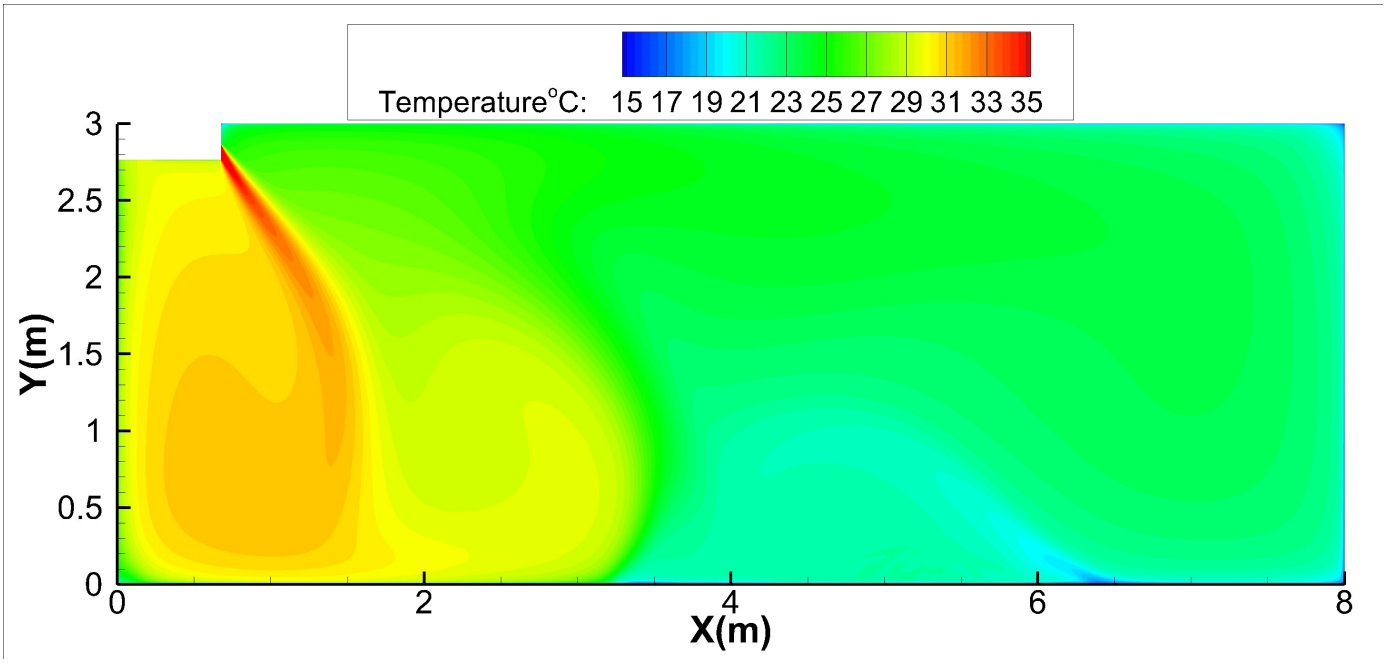

42K-Floor installation:

Discharge Angle 30°

Cooling airflow velocity distributions

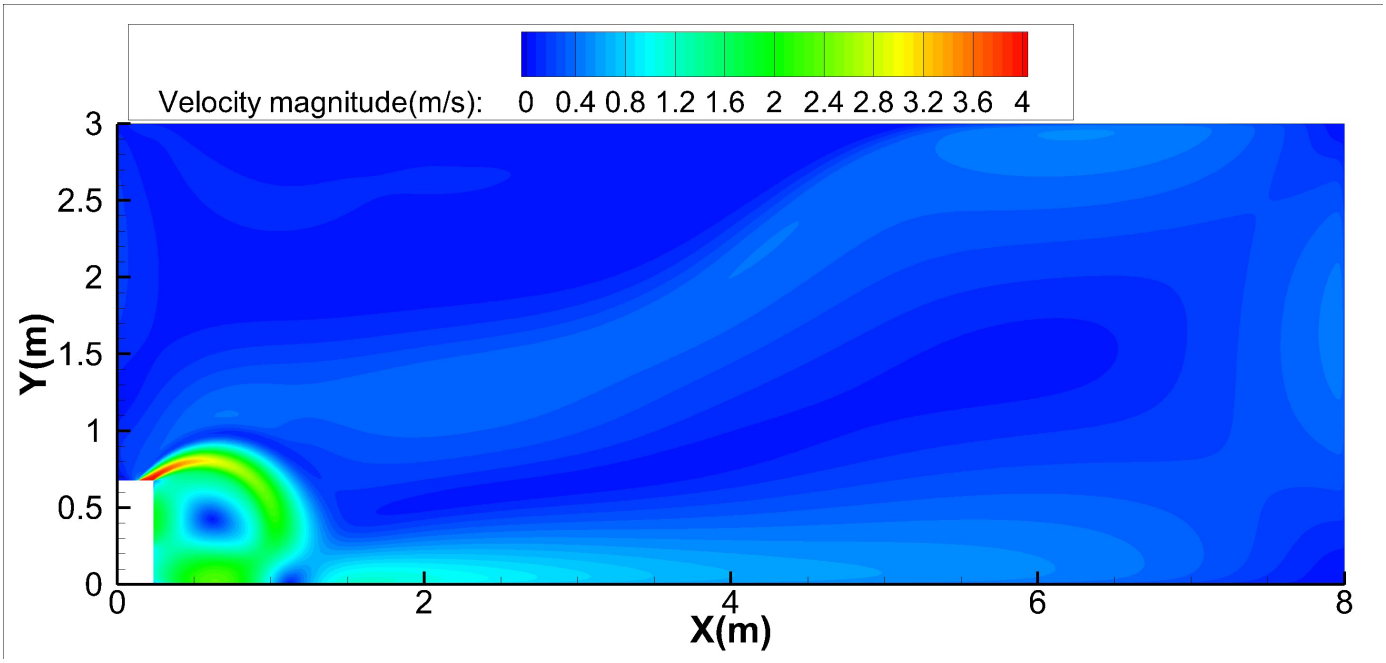

Cooling temperature distributions

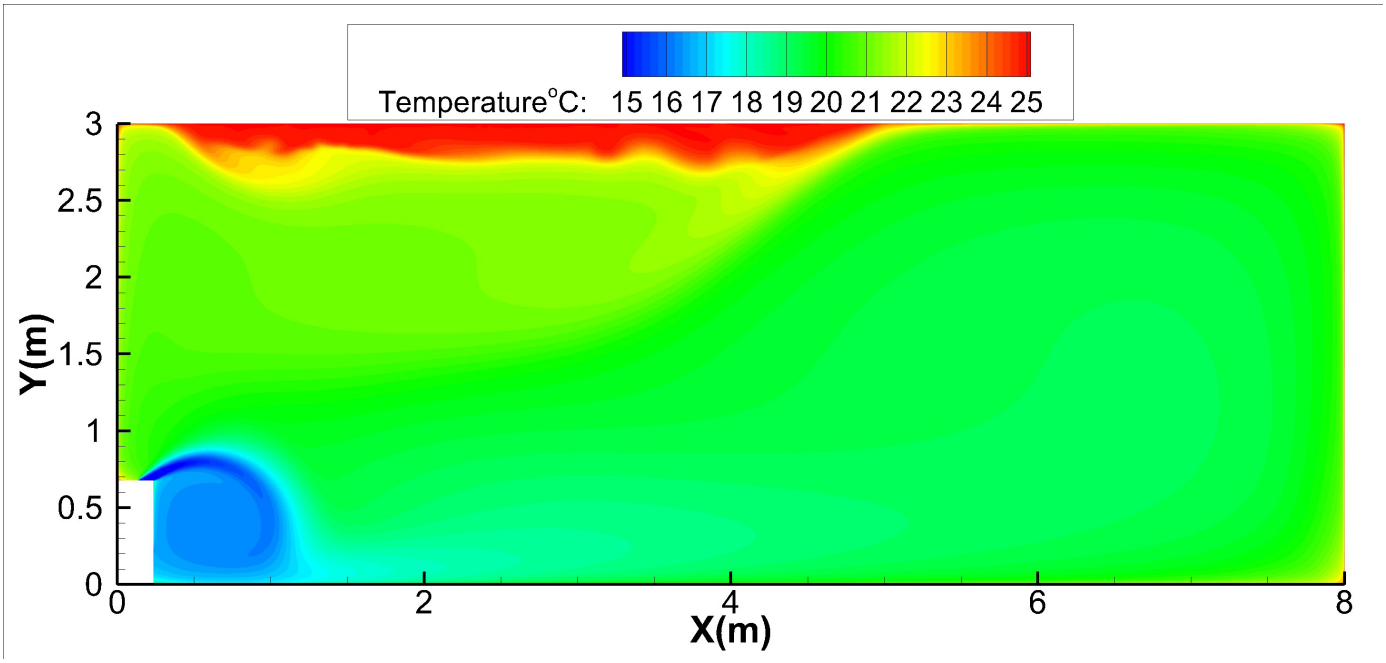

42K-Floor installation:

Discharge Angle 60°

Cooling airflow velocity distributions

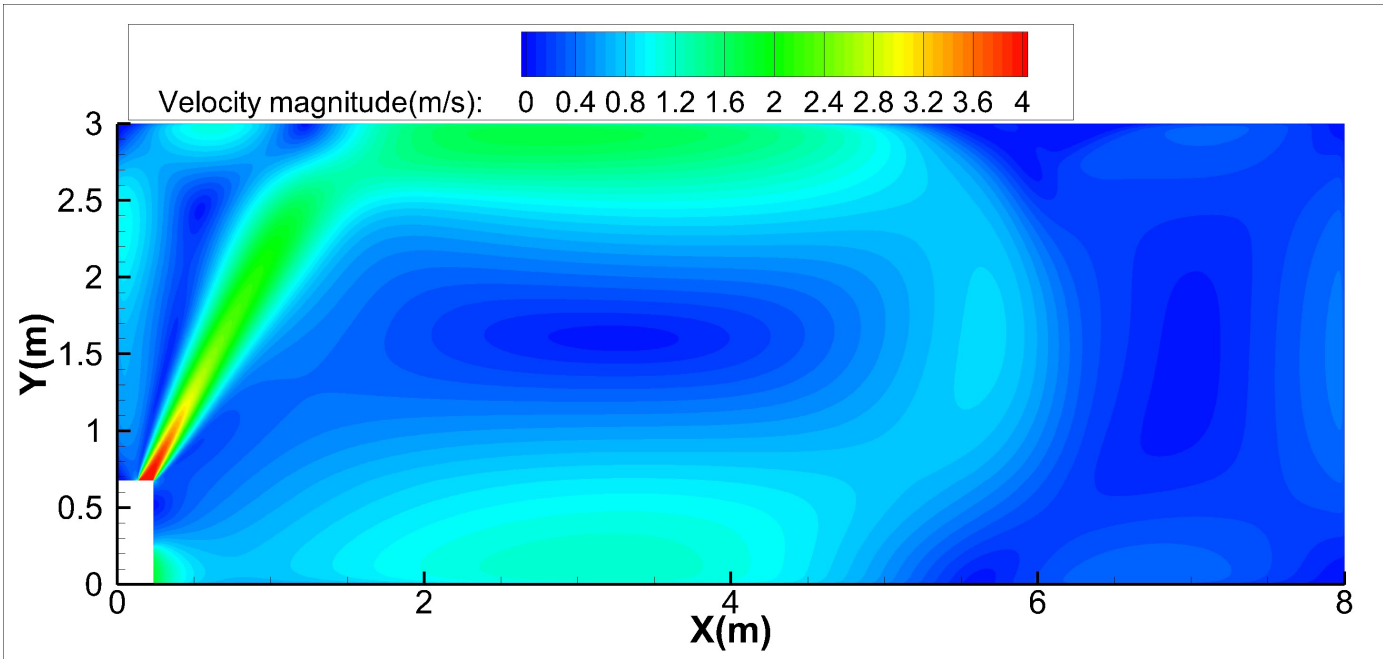

Cooling temperature distributions

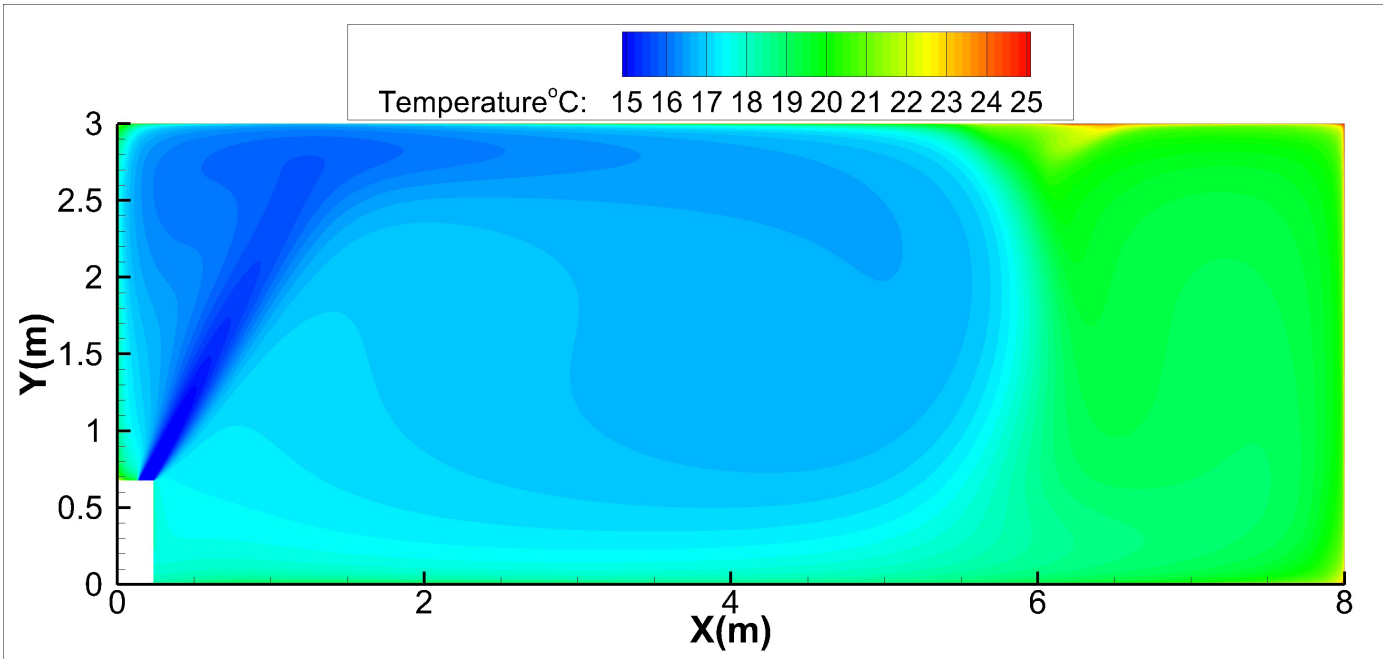

42K-Floor installation:

Discharge Angle 30°

Heating airflow velocity distributions

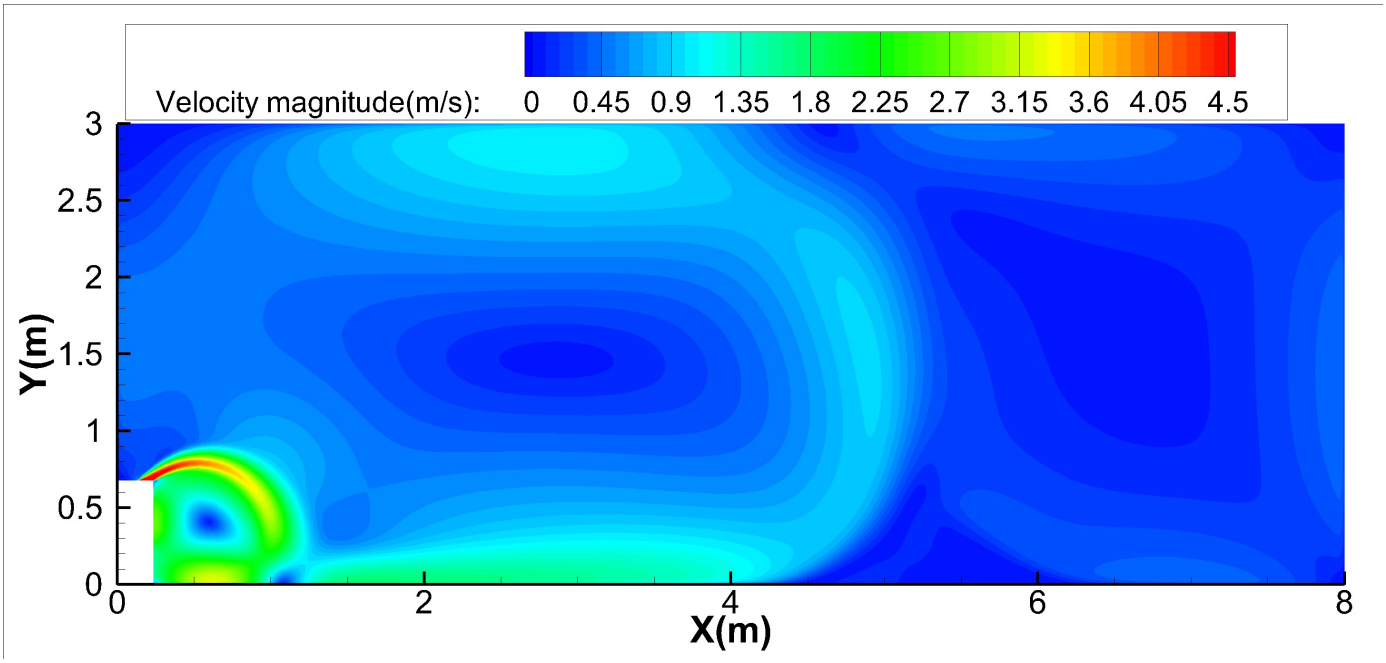

Heating temperature distributions

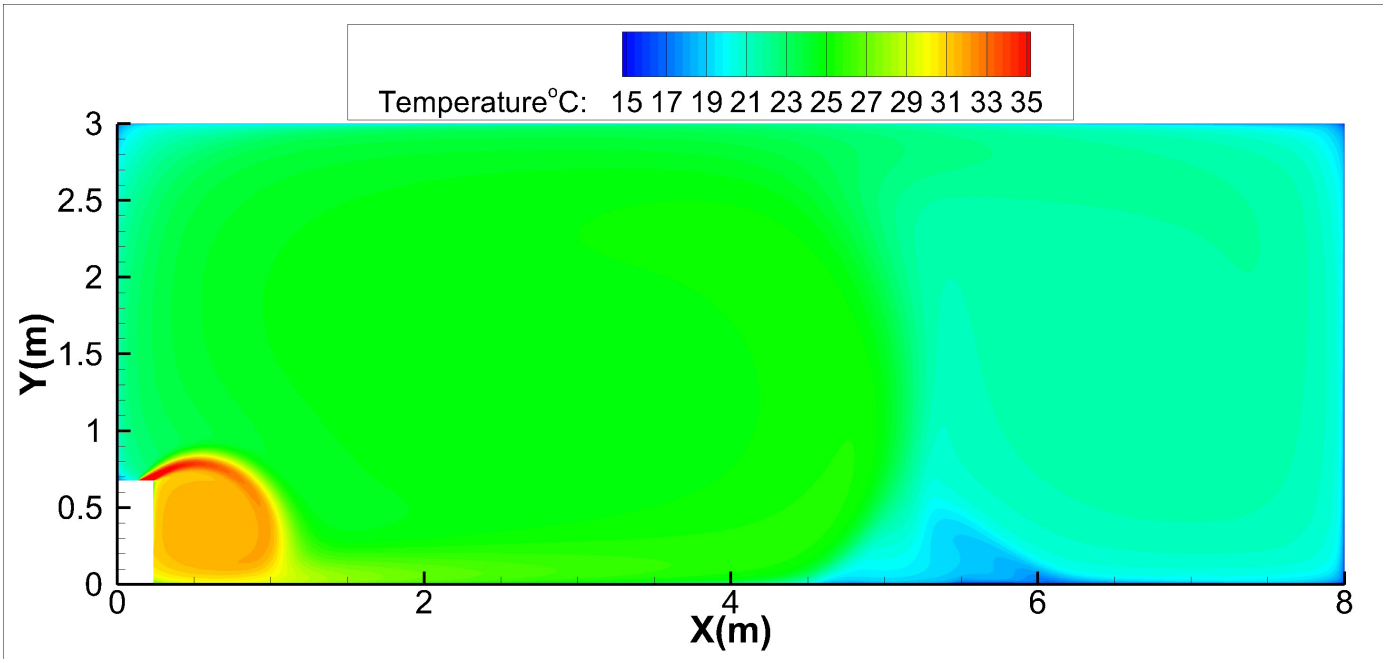

42K-Floor installation:

Discharge Angle 60°

Heating airflow velocity distributions

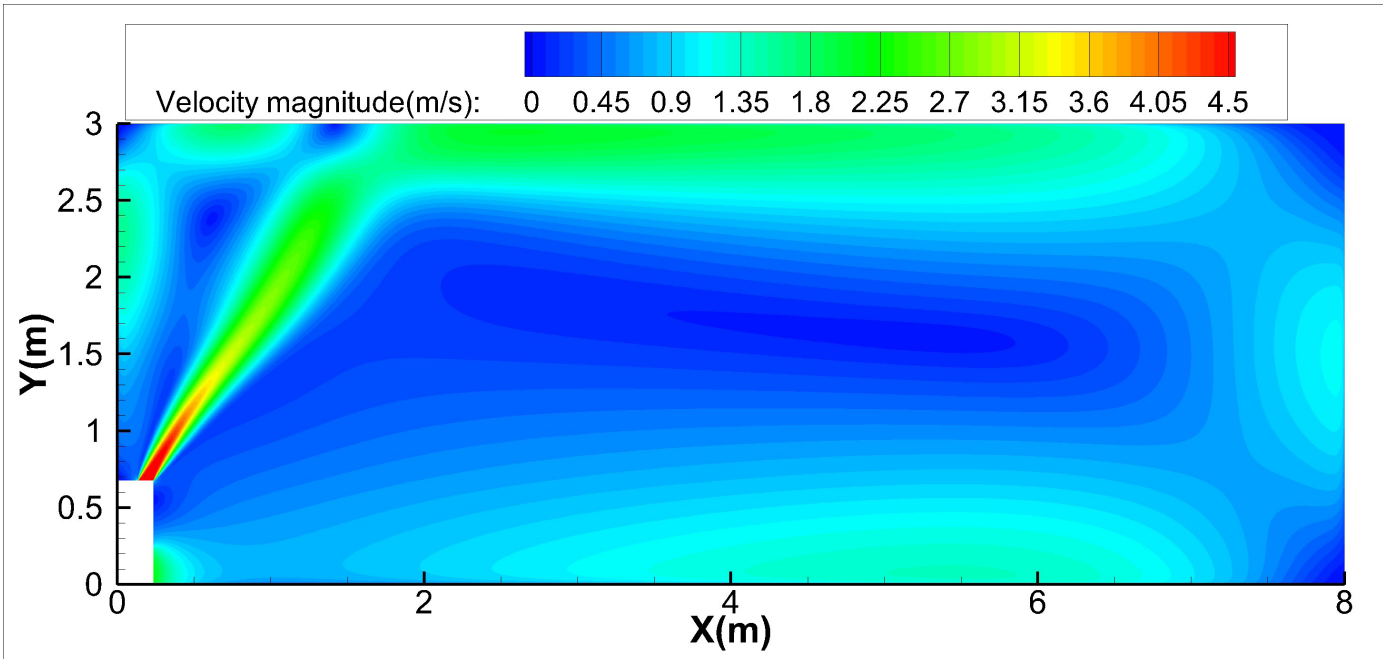

Heating temperature distributions

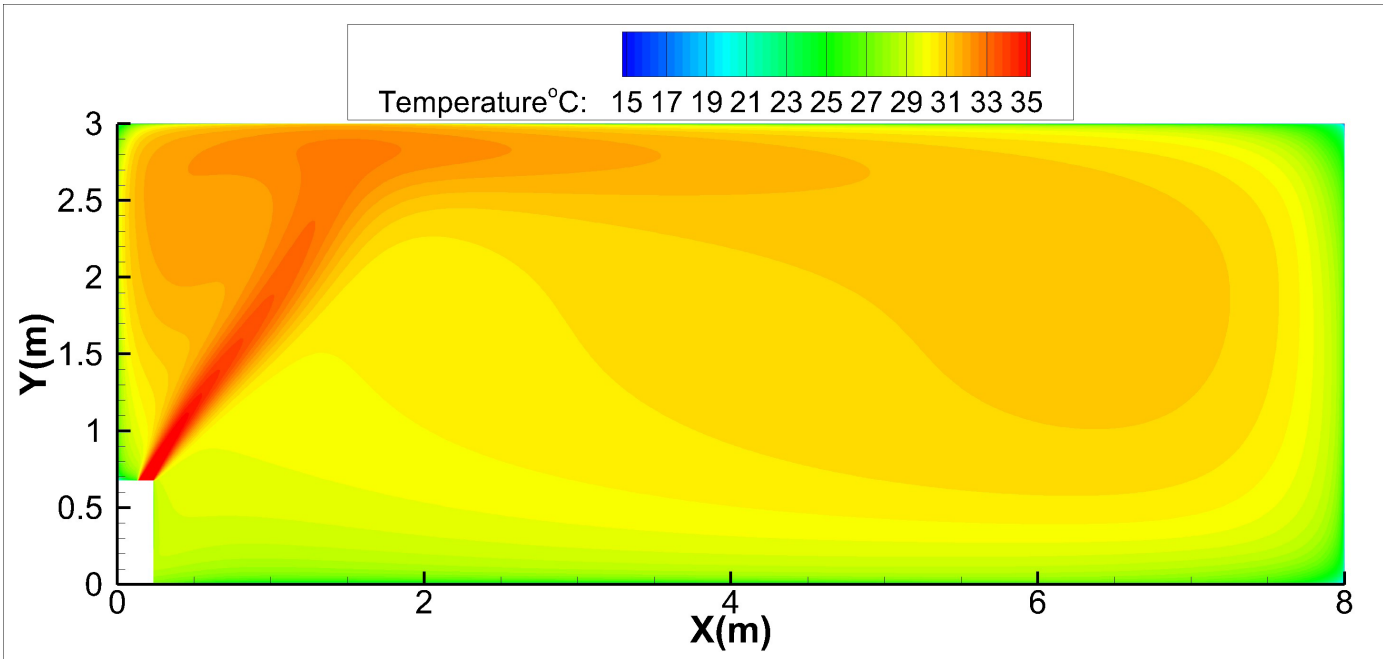

48K-Ceiling installation:

Discharge Angle 30°

Cooling airflow velocity distributions

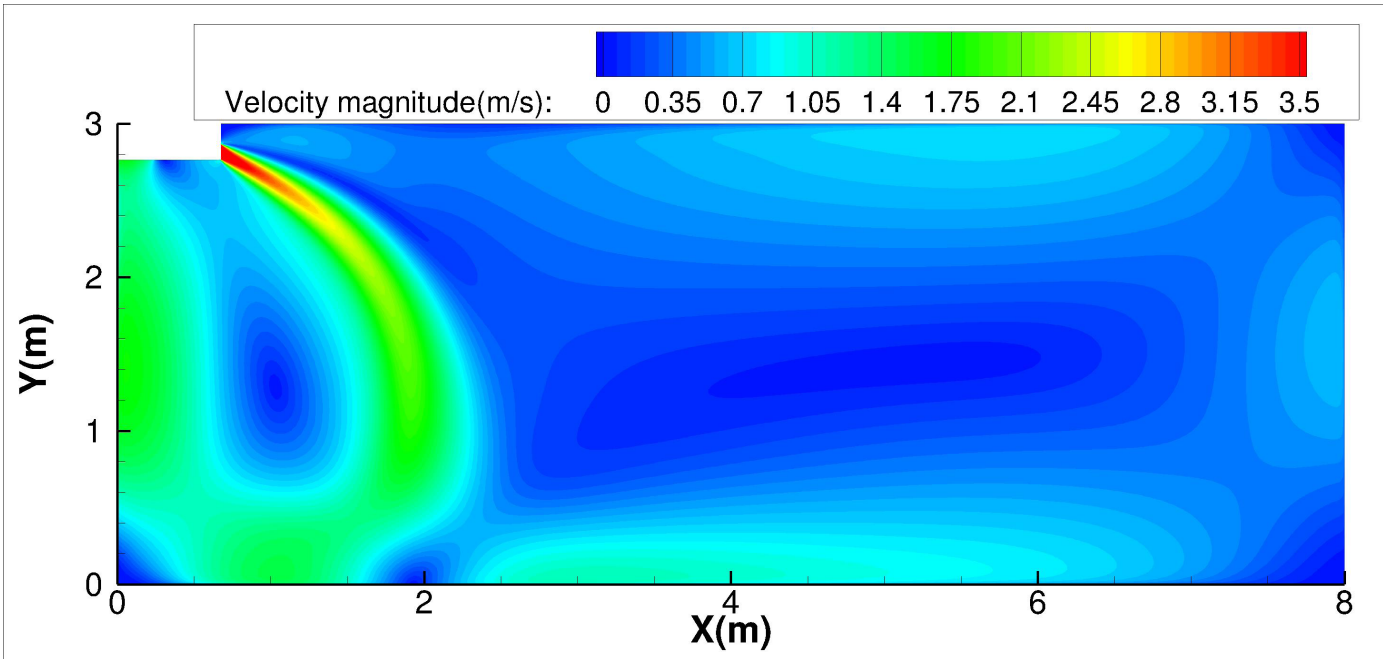

Cooling temperature distributions

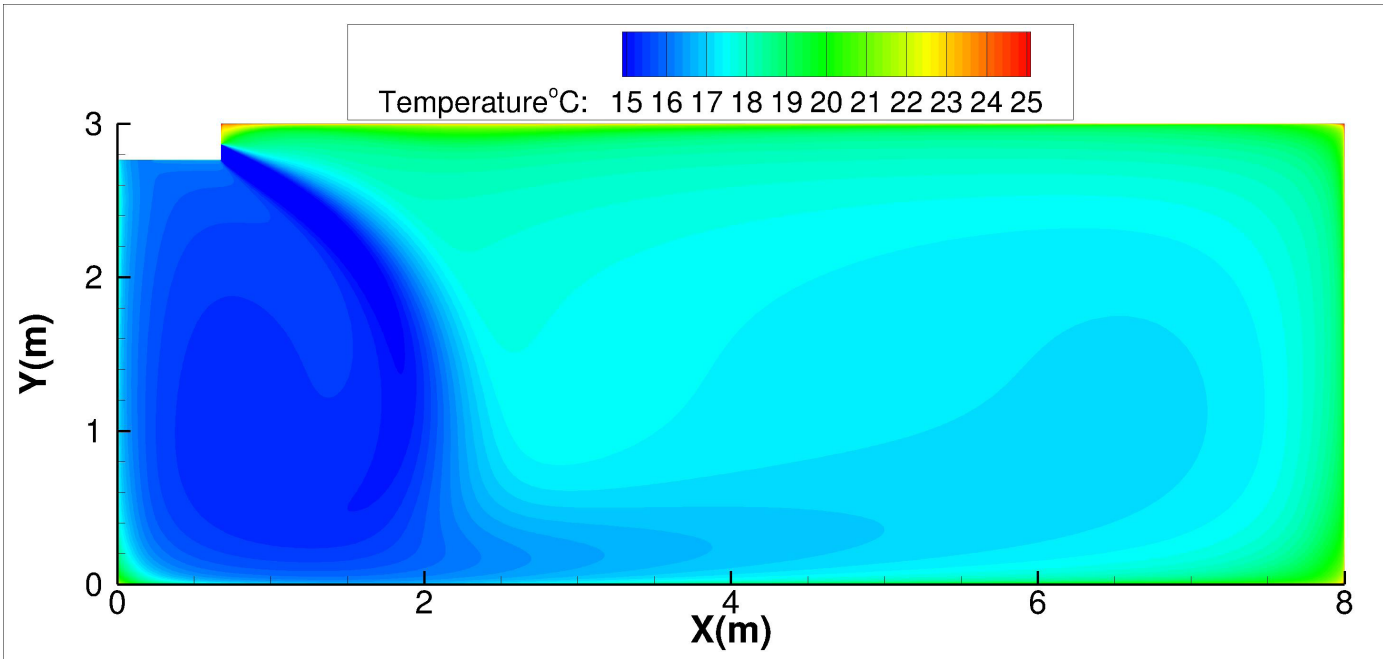

48K-Ceiling installation:

Discharge Angle 60°

Cooling airflow velocity distributions

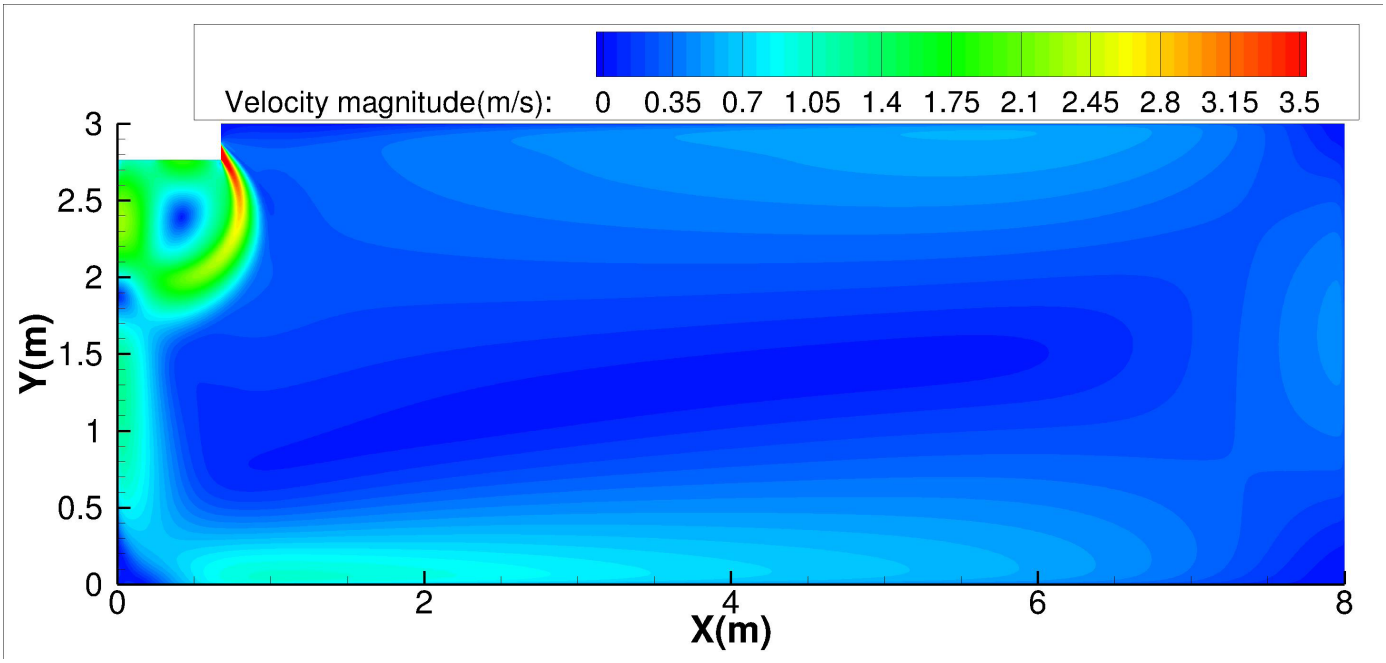

Cooling temperature distributions

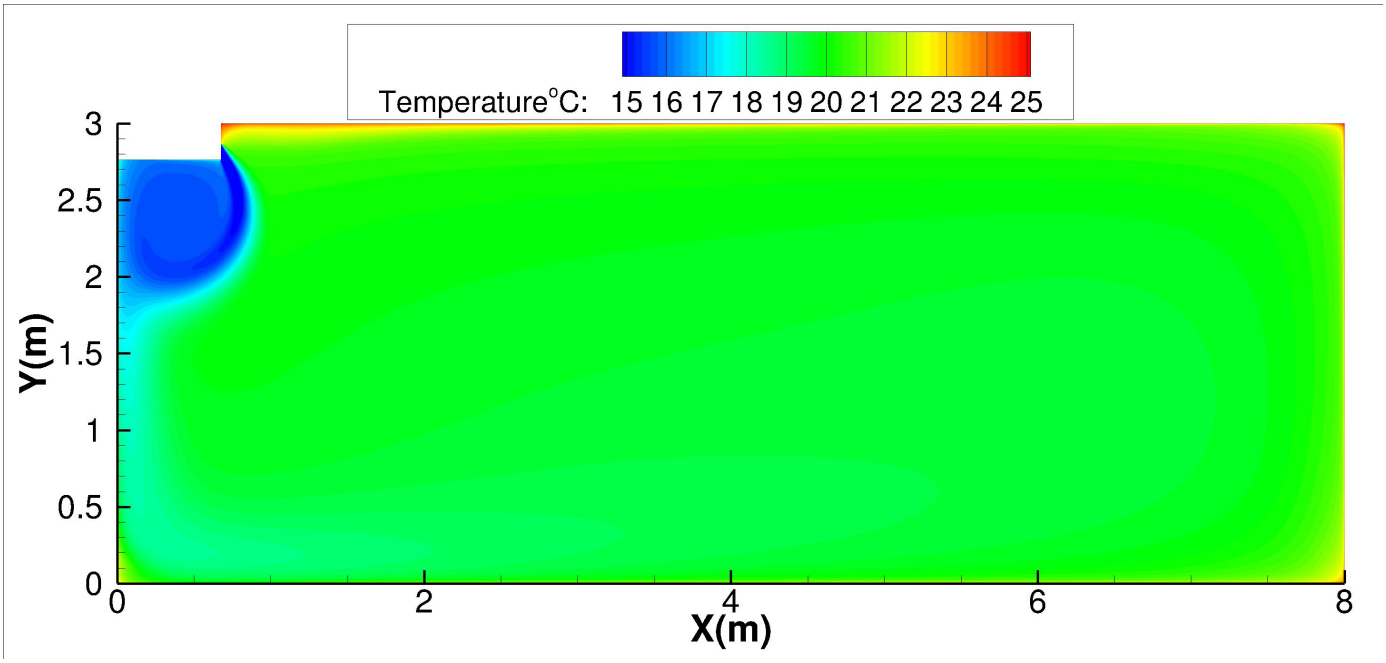

48K-Ceiling installation:

Discharge Angle 30°

Heating airflow velocity distributions

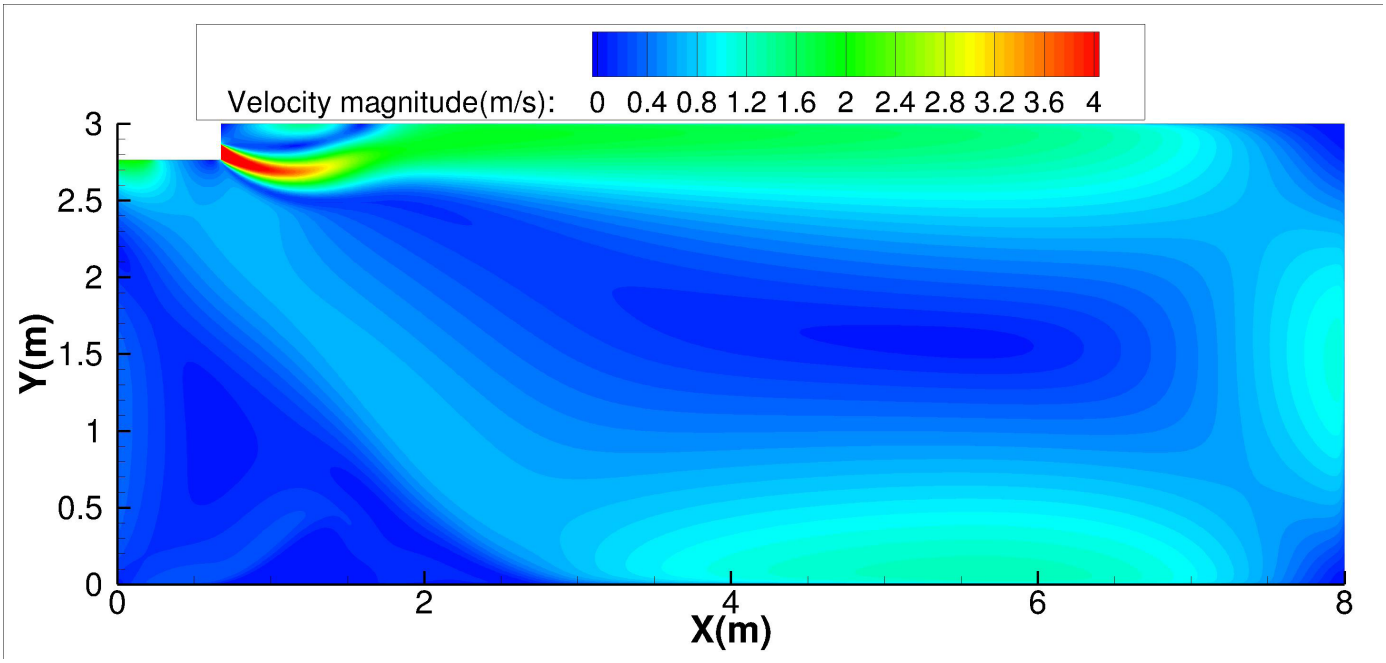

Heating temperature distributions

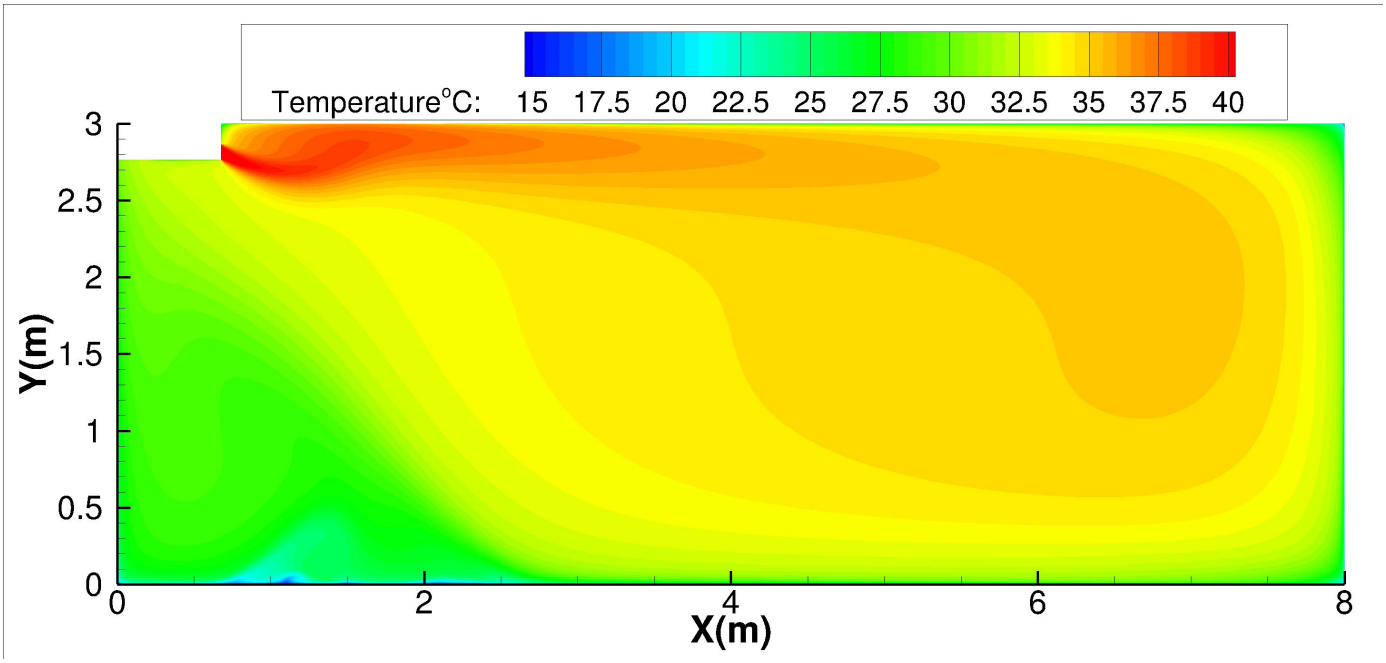

48K-Ceiling installation:

Discharge Angle 60°

Heating airflow velocity distributions

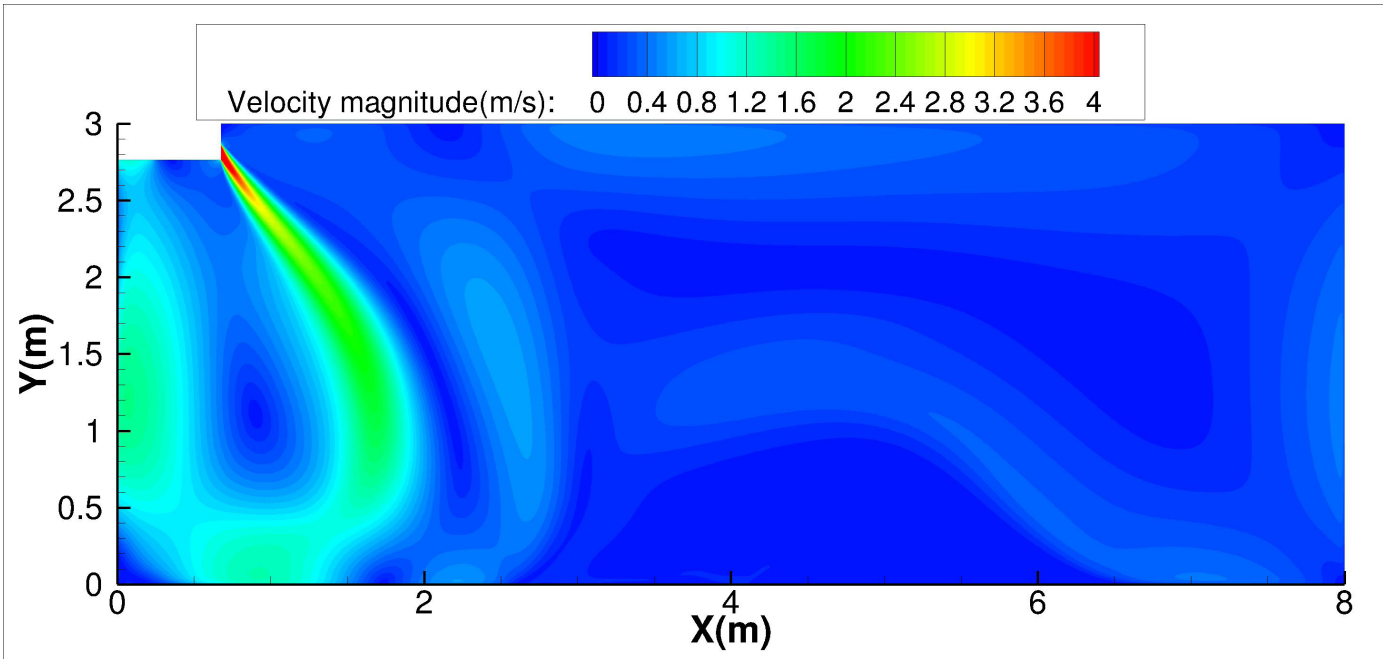

Heating temperature distributions

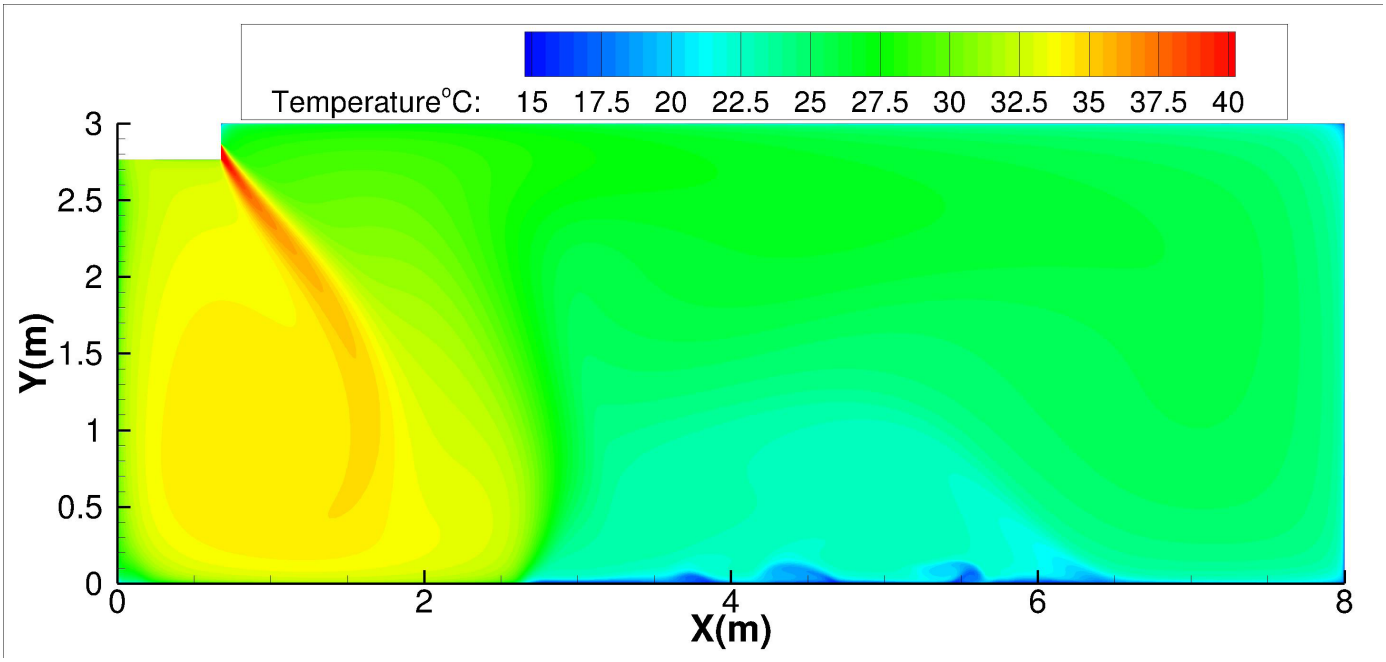

48K-Floor installation:

Discharge Angle 30°

Cooling airflow velocity distributions

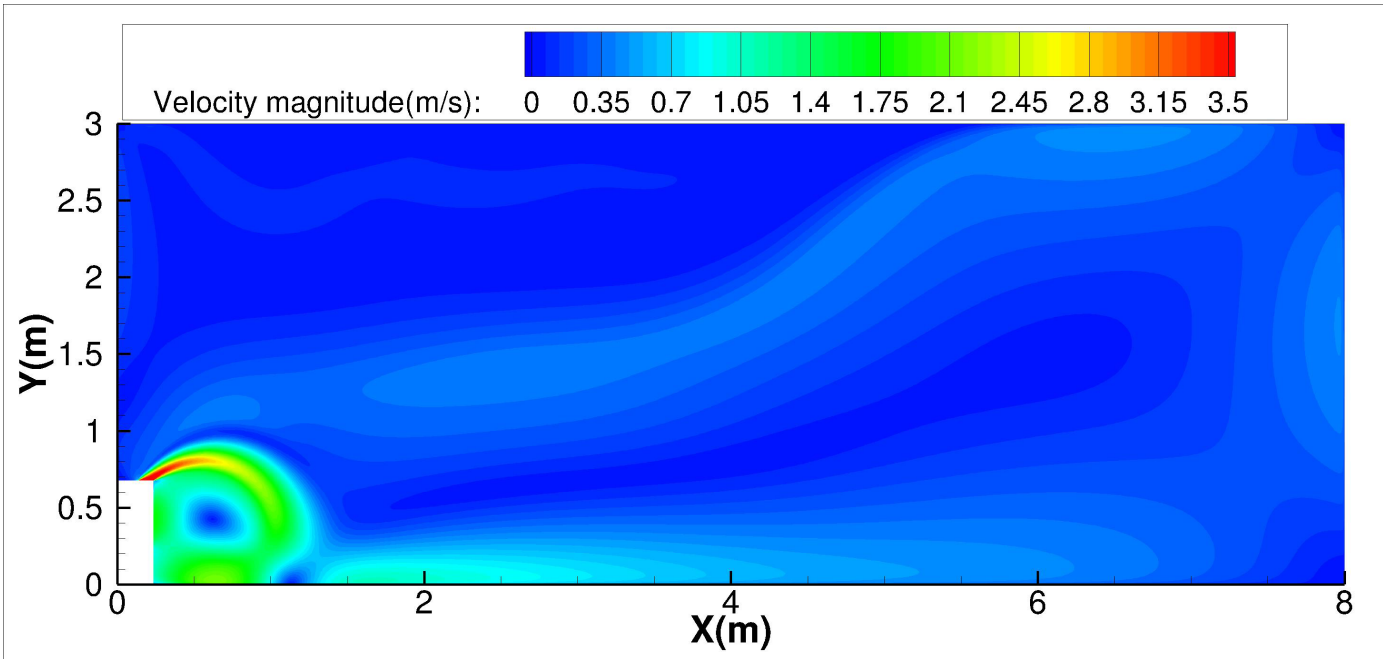

Cooling temperature distributions

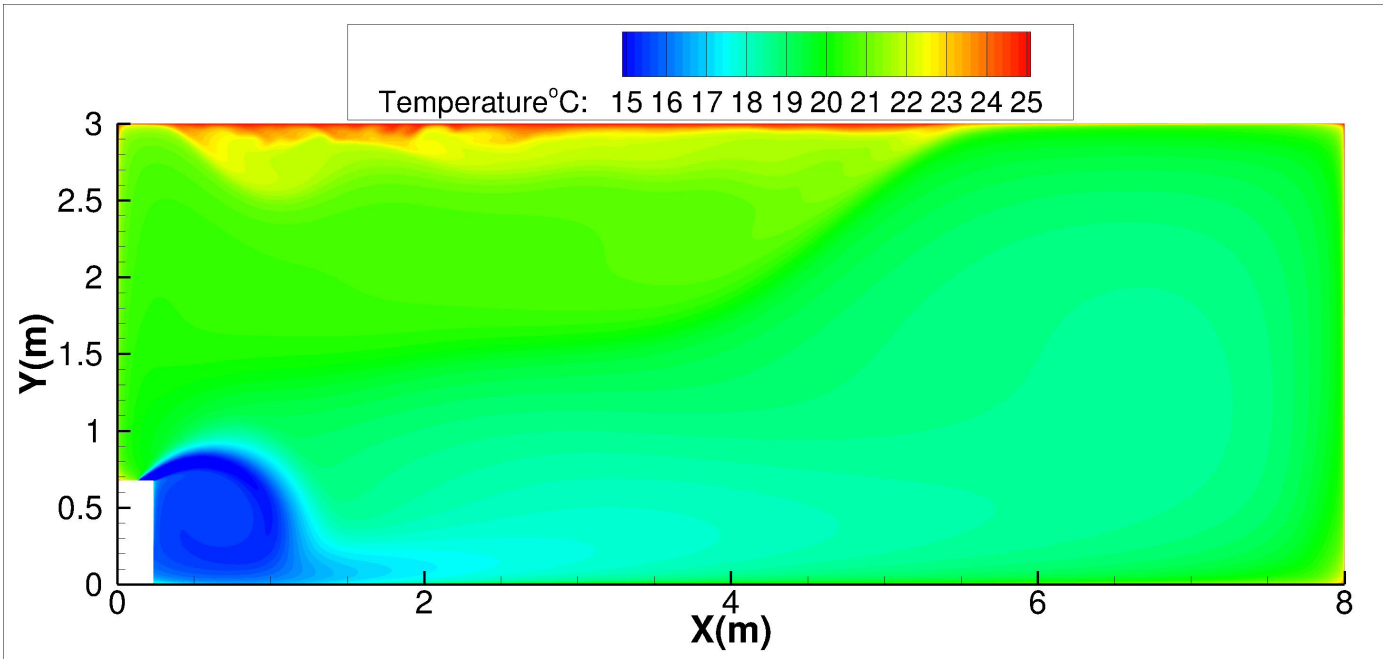

48K-Floor installation:

Discharge Angle 60°

Cooling airflow velocity distributions

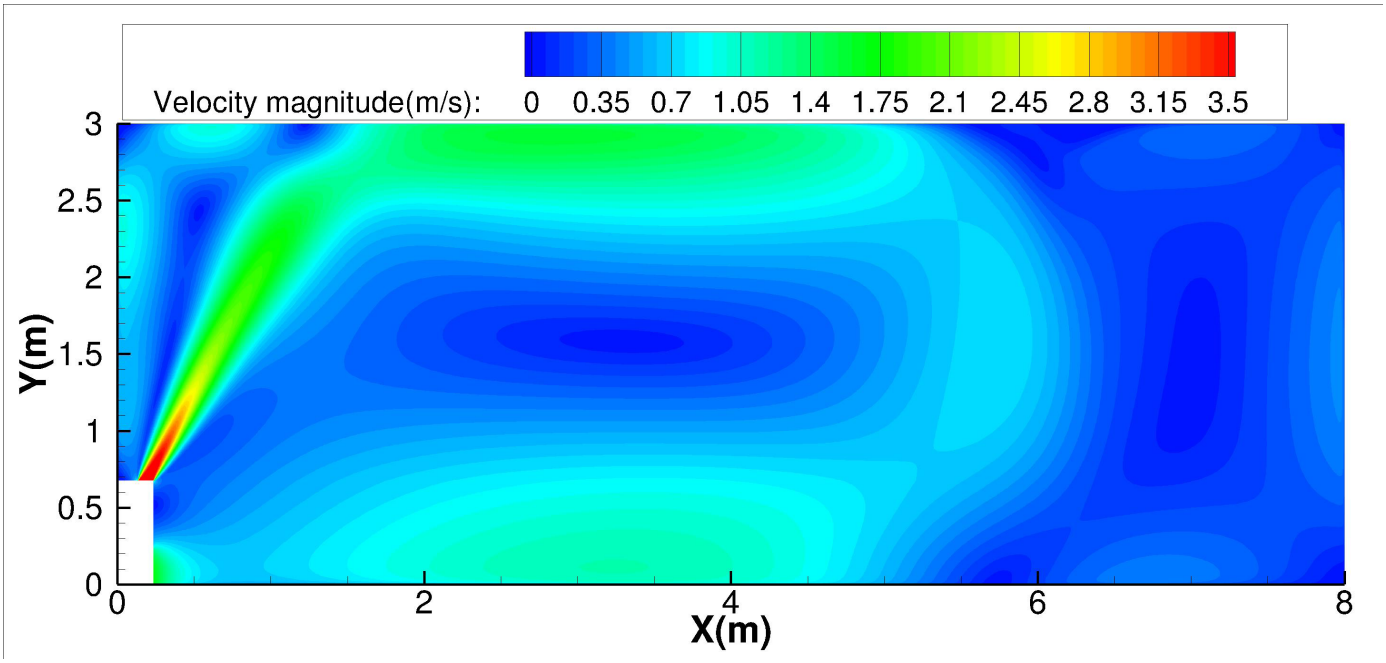

Cooling temperature distributions

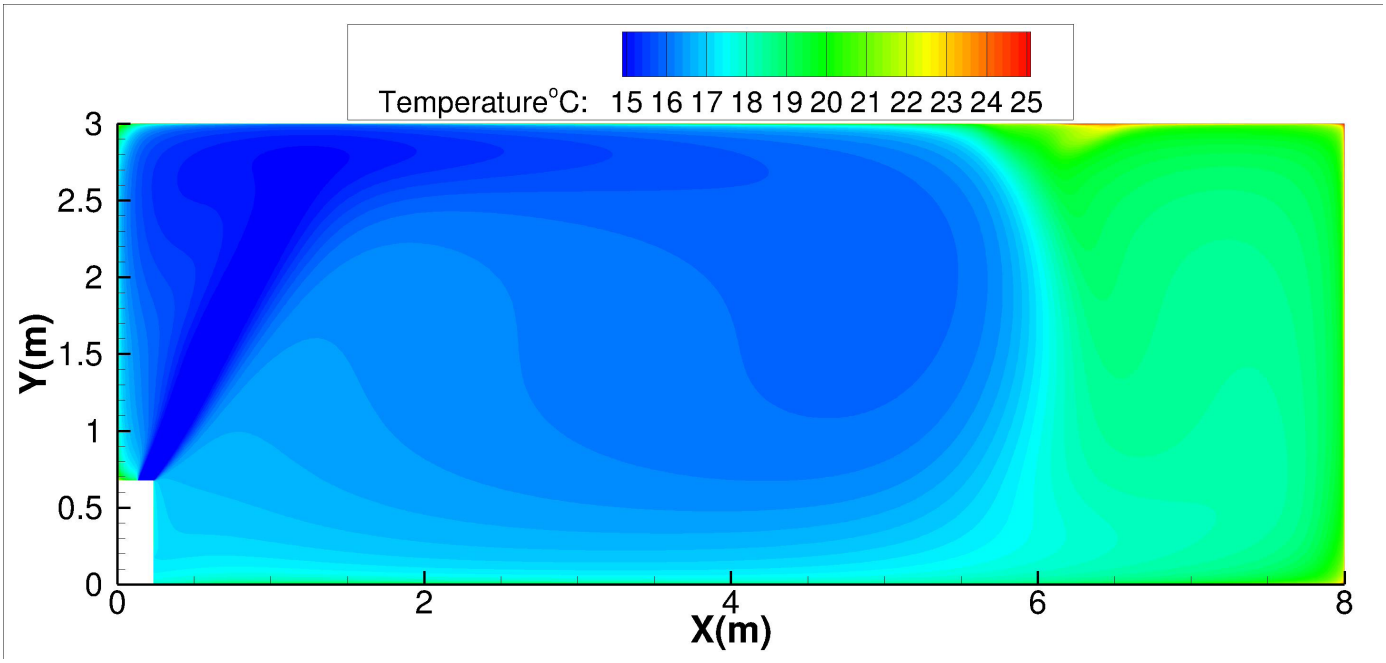

48K-Floor installation:

Discharge Angle 30°

Heating airflow velocity distributions

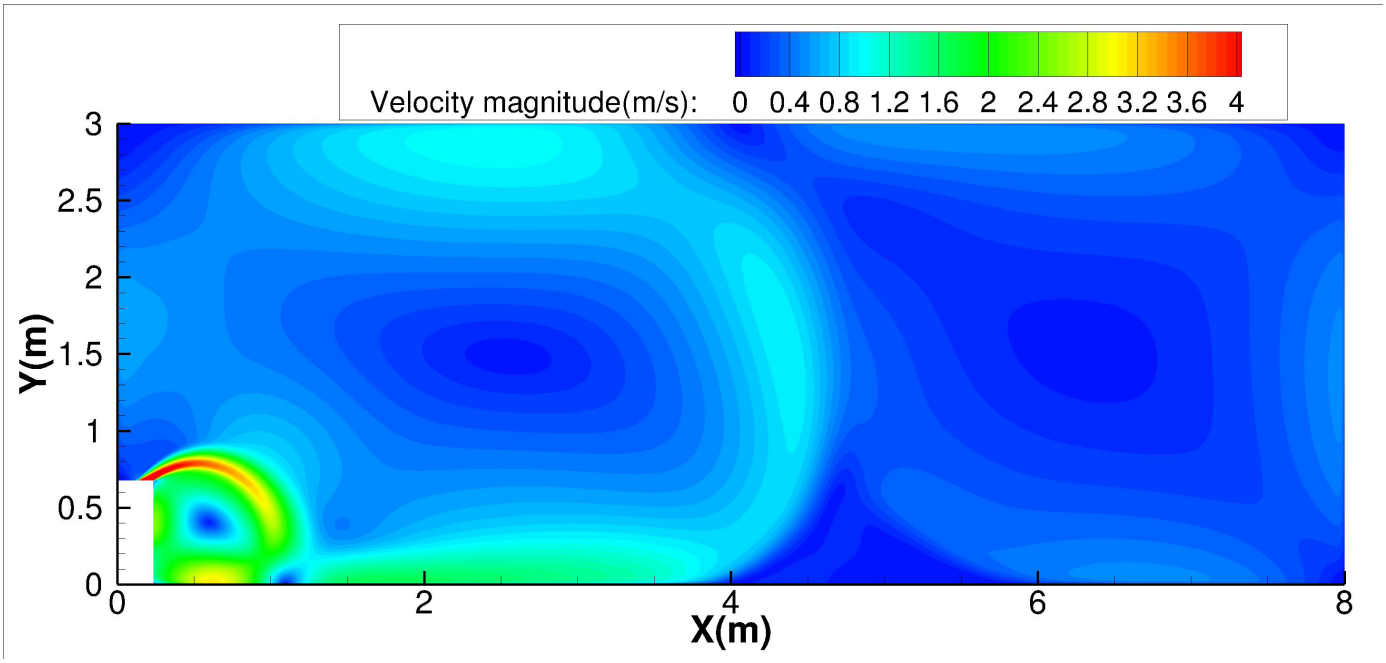

Heating temperature distributions

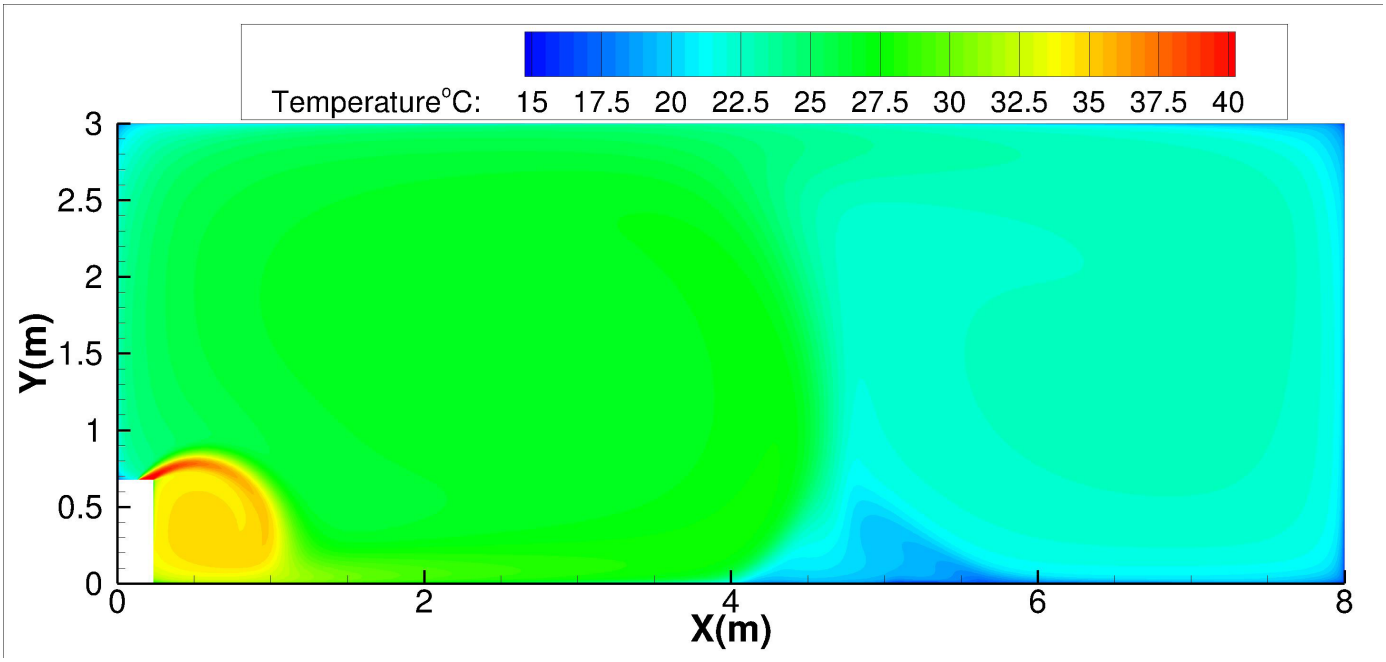

48K-Floor installation:

Discharge Angle 60°

Heating airflow velocity distributions

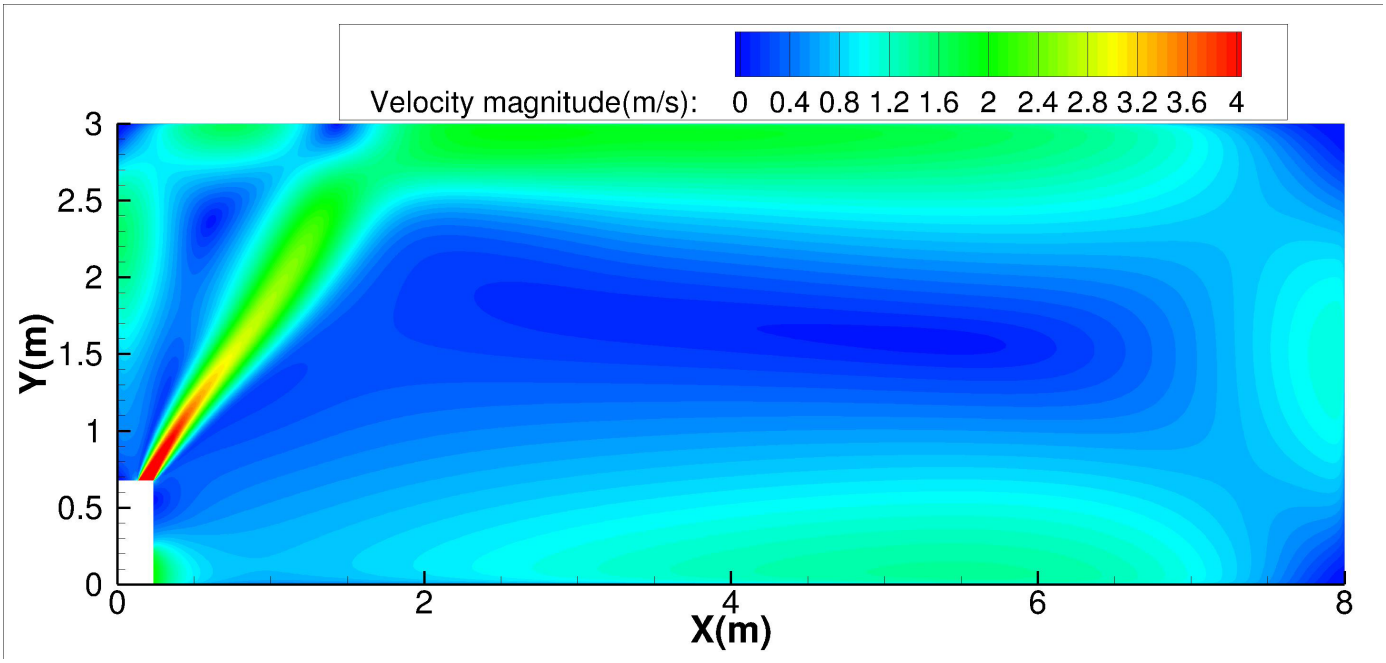

Heating temperature distributions

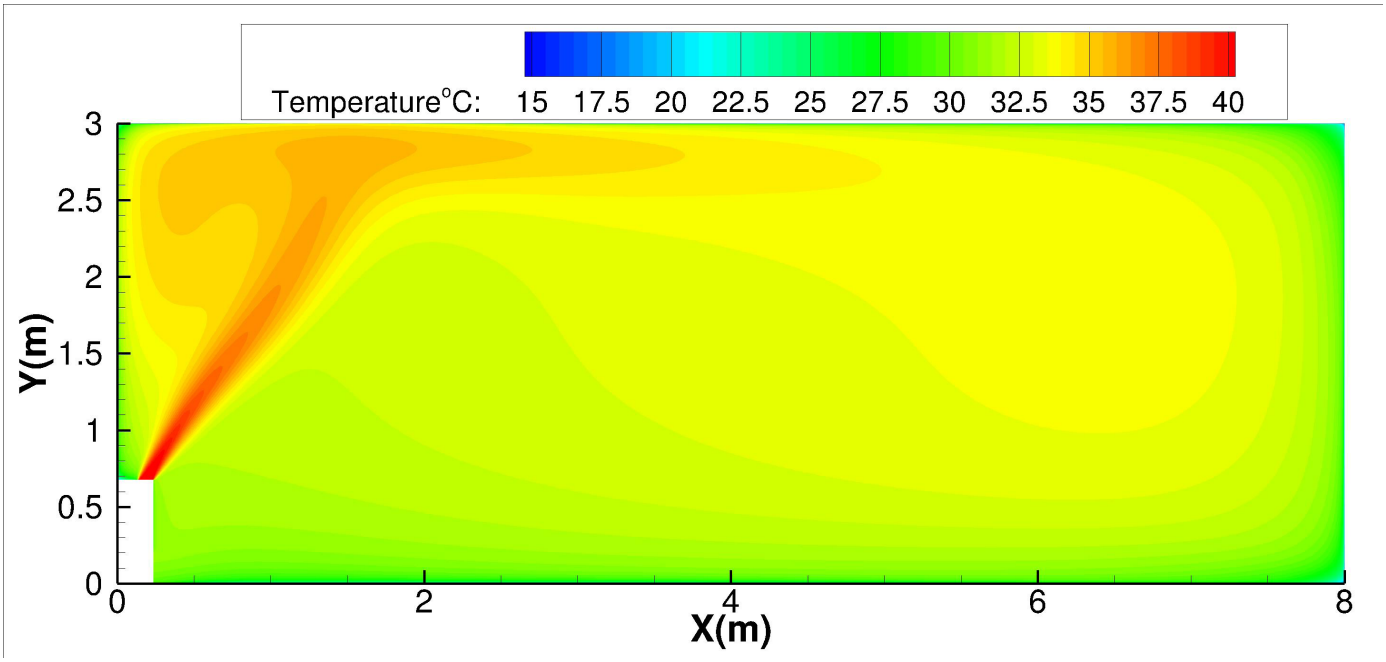

60K-Ceiling installation:

Discharge Angle 30°

Cooling airflow velocity distributions

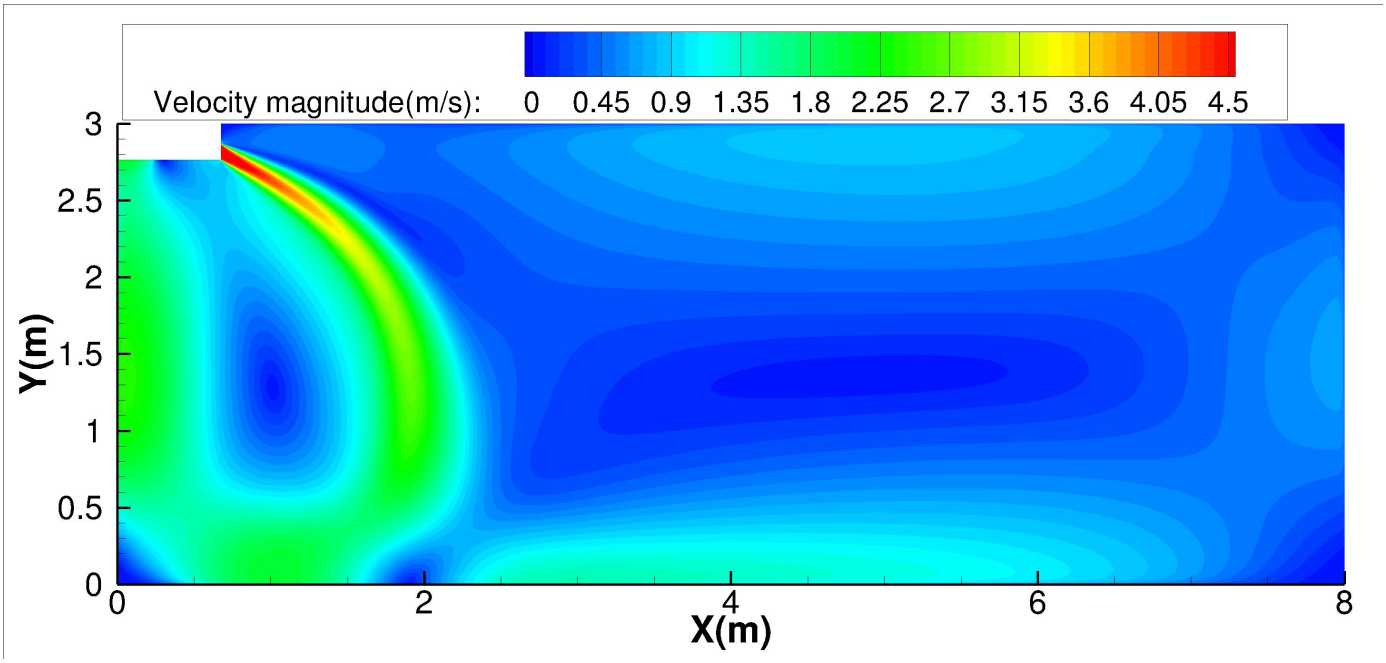

Cooling temperature distributions

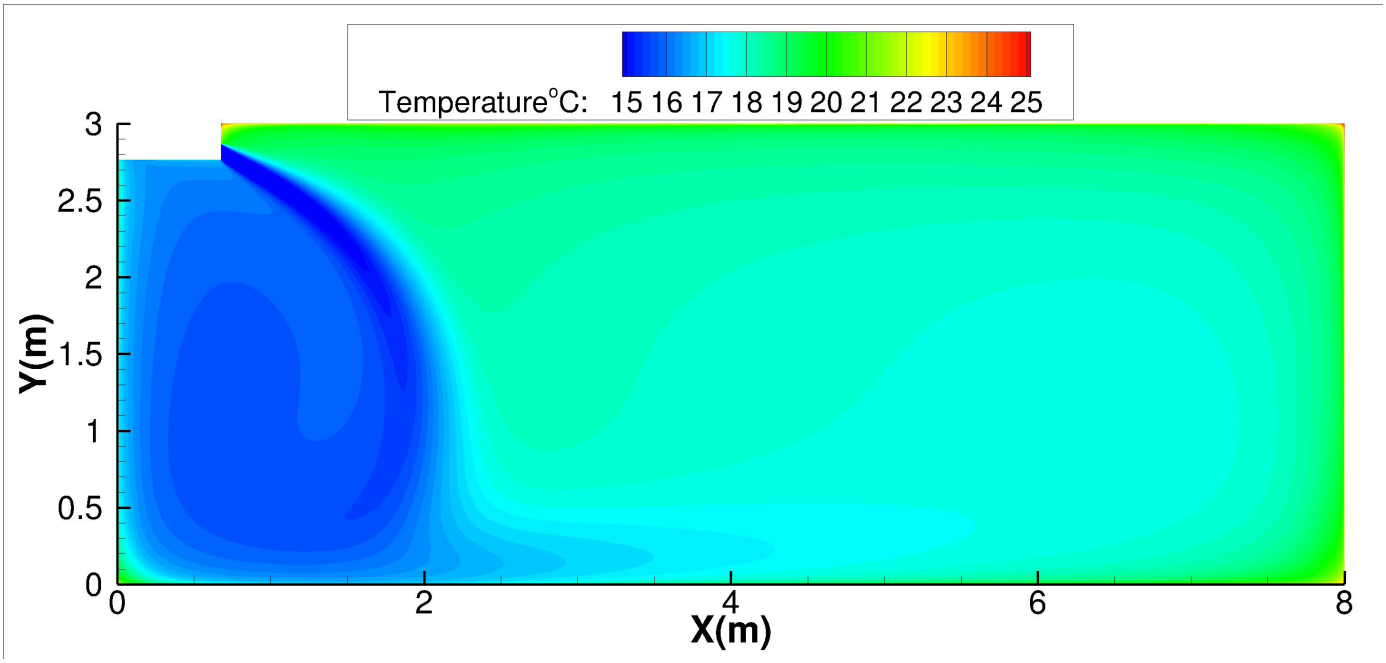

60K-Ceiling installation:

Discharge Angle 60°

Cooling airflow velocity distributions

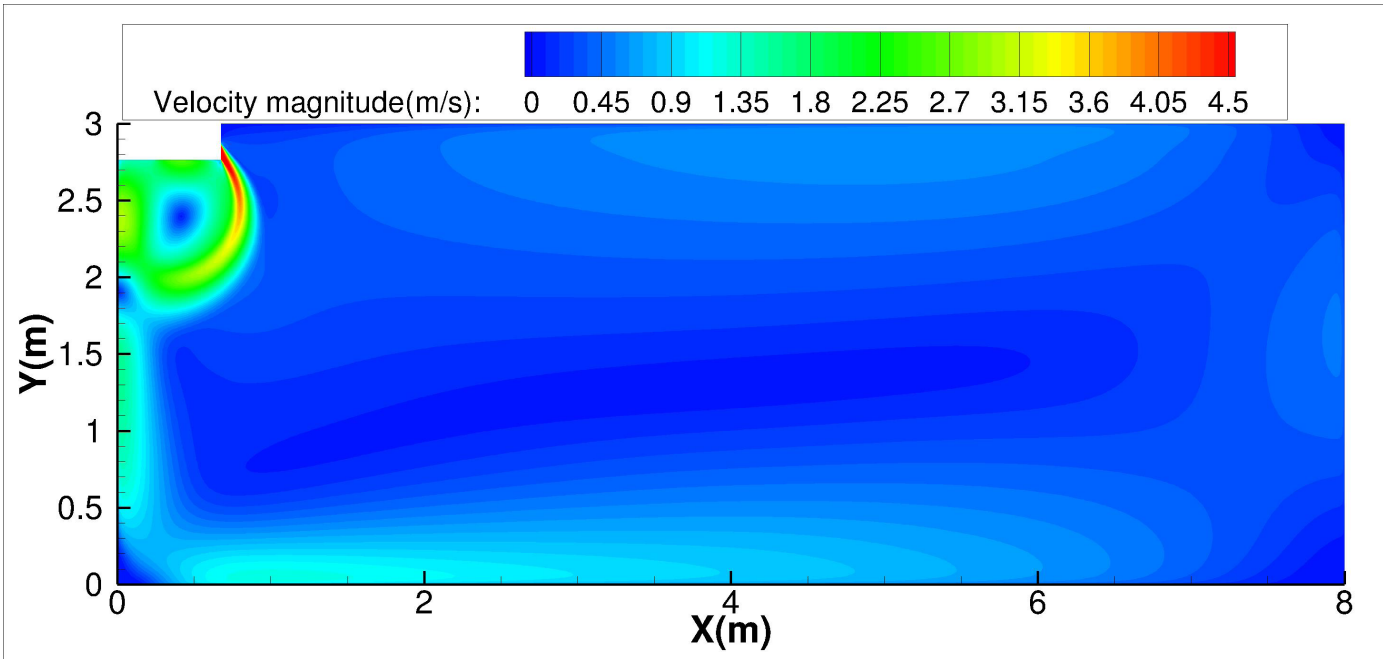

Cooling temperature distributions

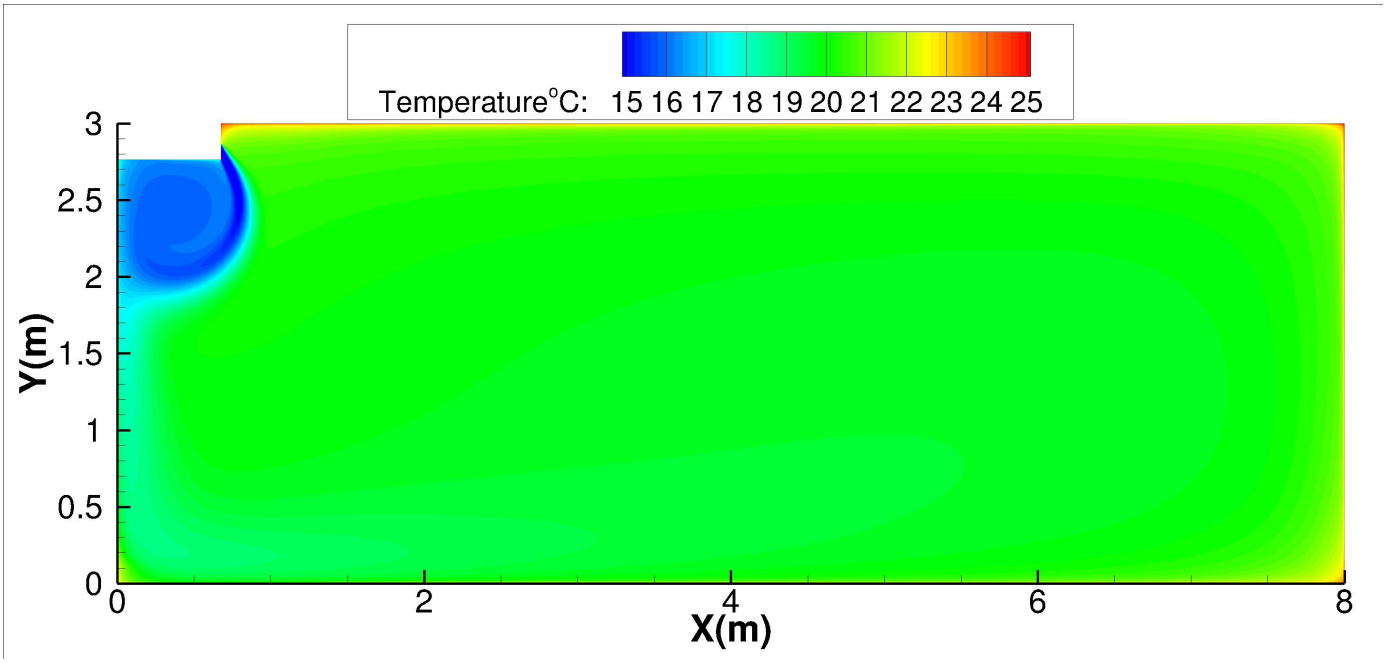

60K-Ceiling installation:

Discharge Angle 30°

Heating airflow velocity distributions

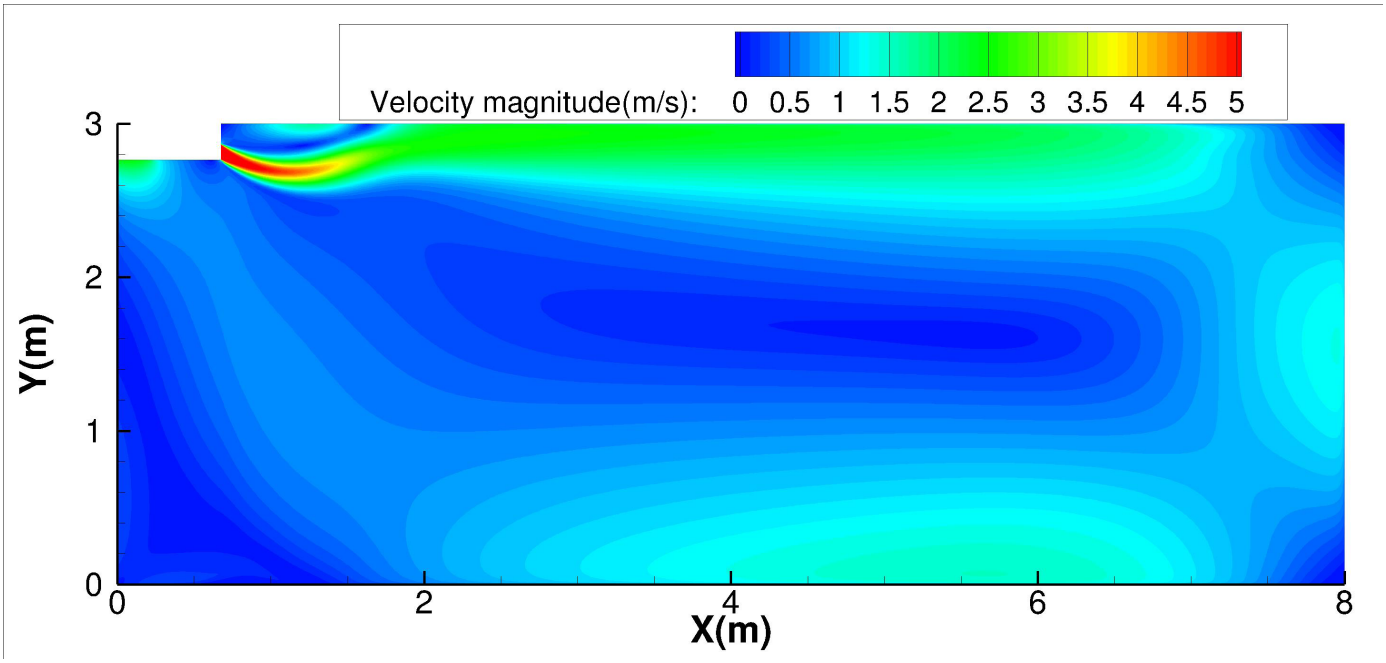

Heating temperature distributions

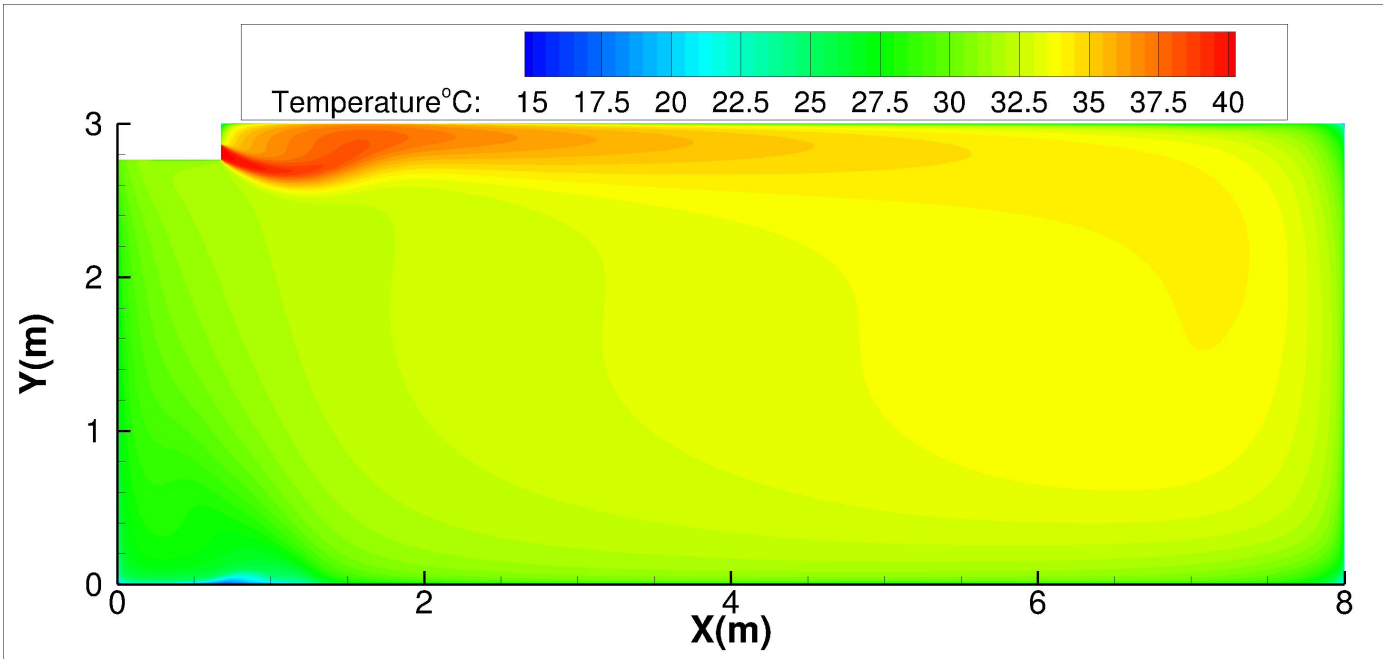

60K-Ceiling installation:

Discharge Angle 60°

Heating airflow velocity distributions

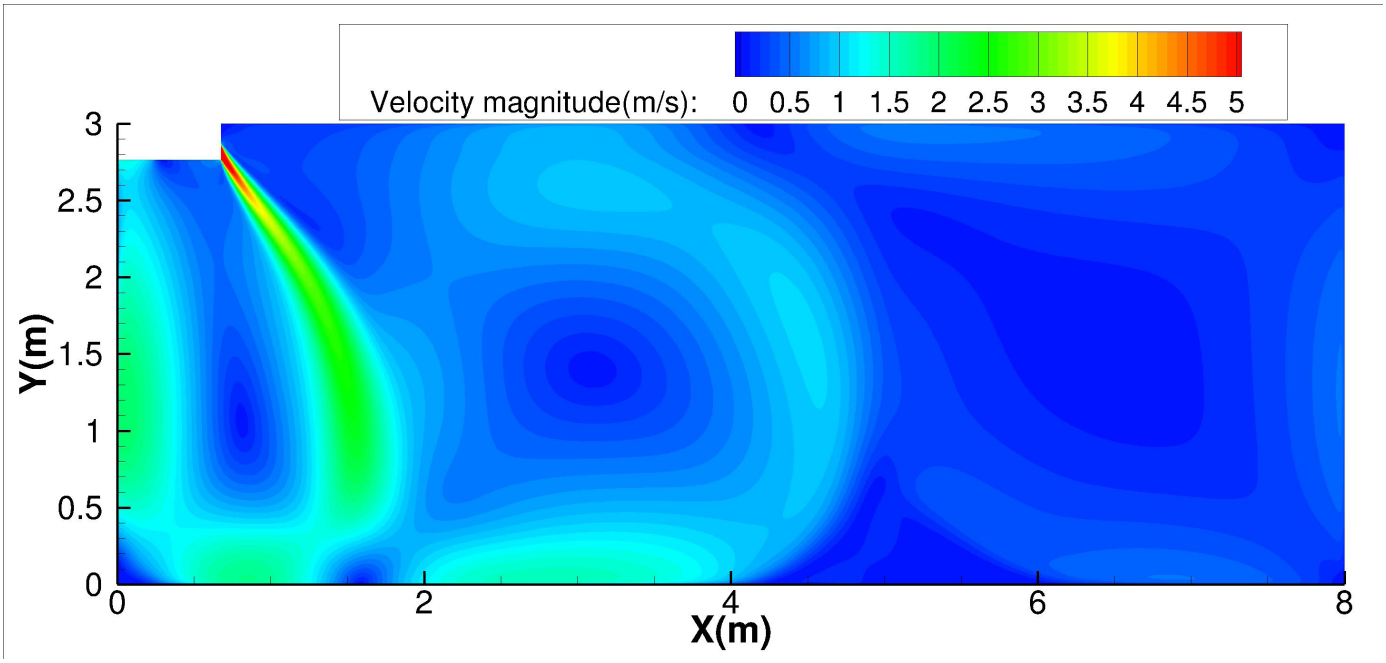

Heating temperature distributions

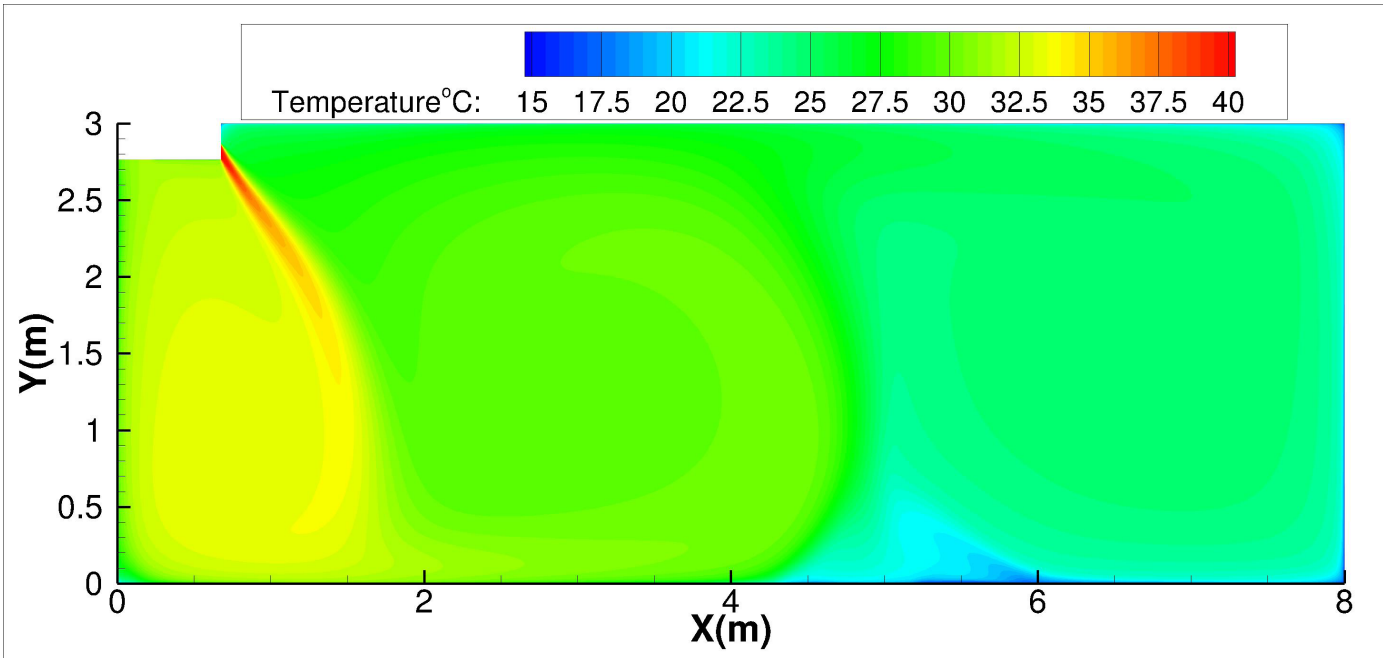

60K-Floor installation:

Discharge Angle 30°

Cooling airflow velocity distributions

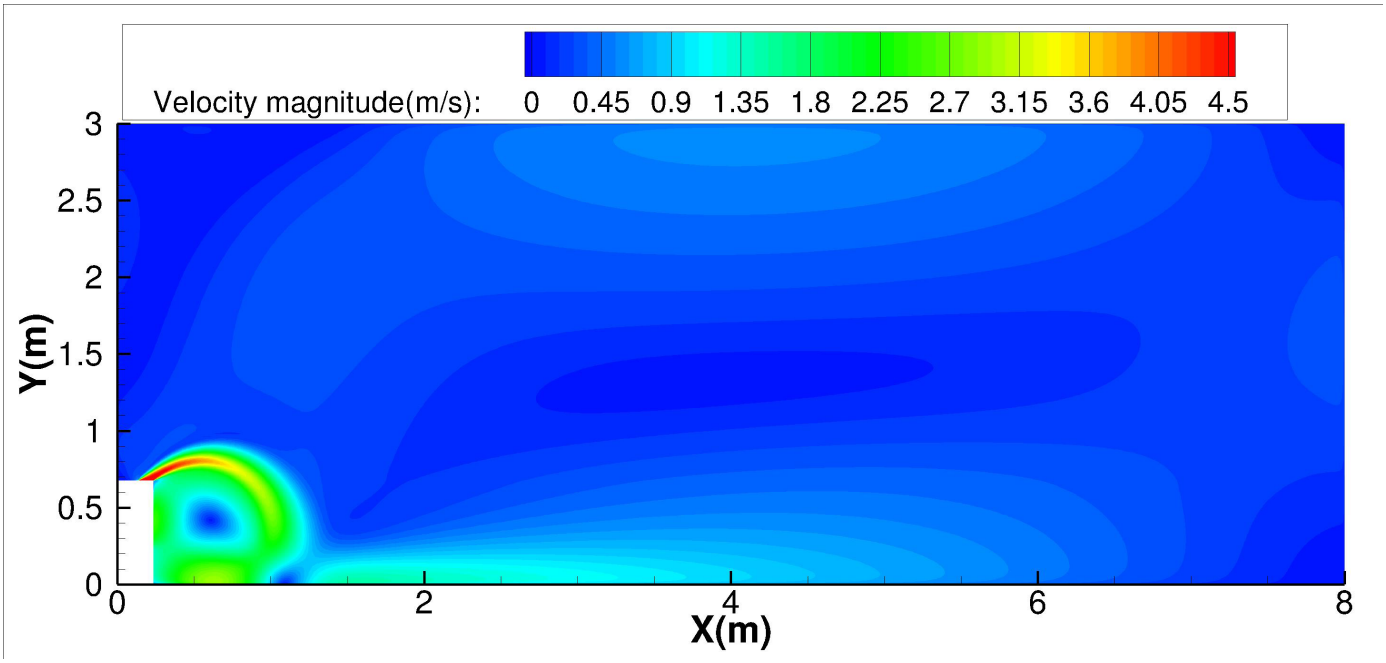

Cooling temperature distributions

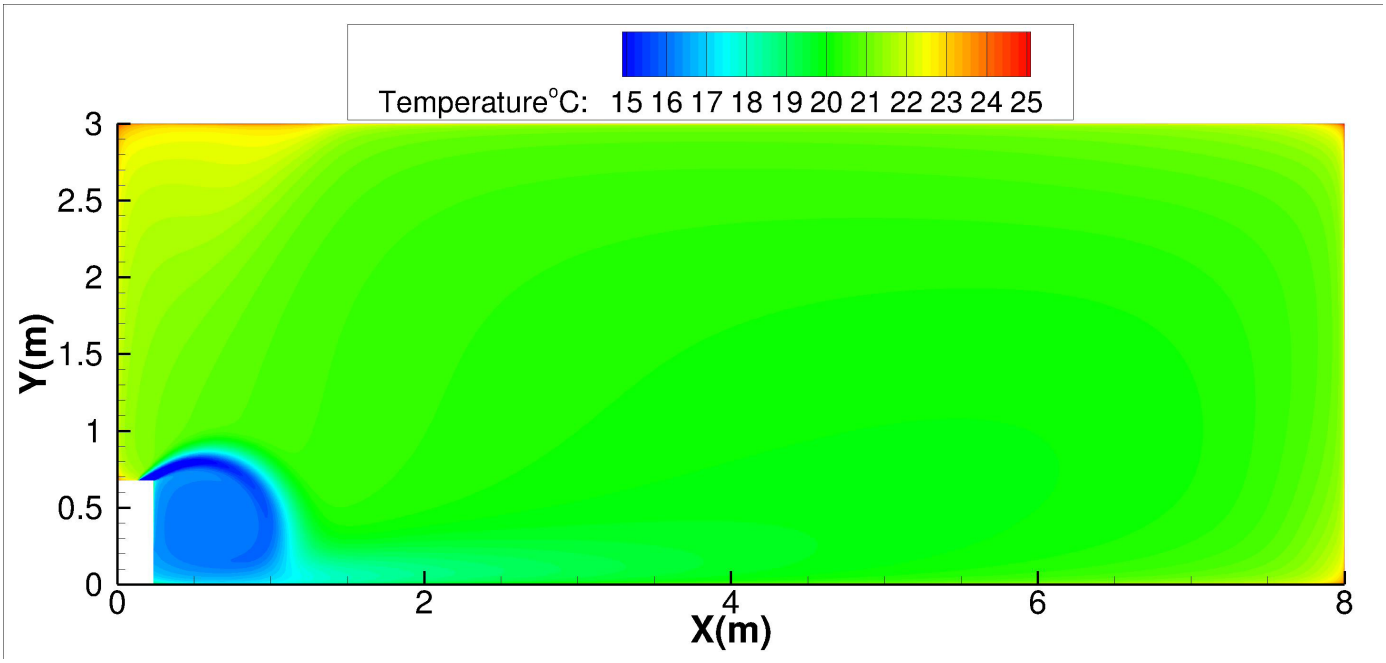

60K-Floor installation:

Discharge Angle 60°

Cooling airflow velocity distributions

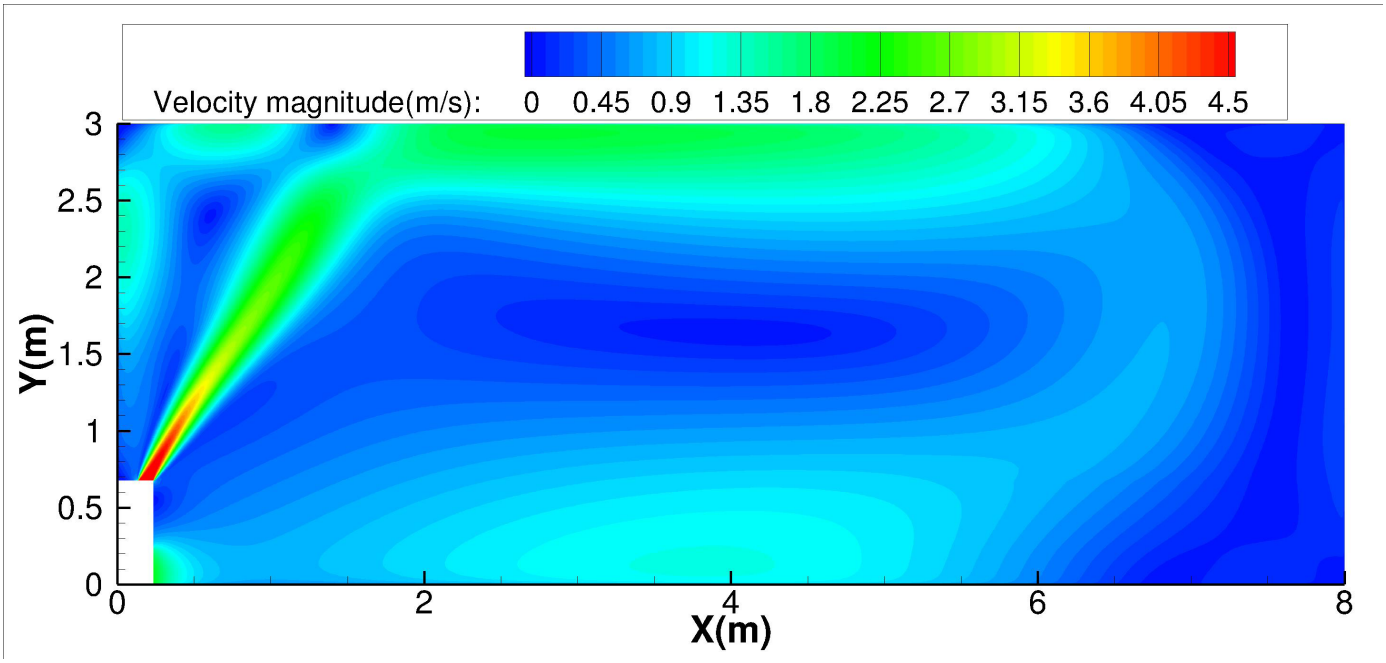

Cooling temperature distributions

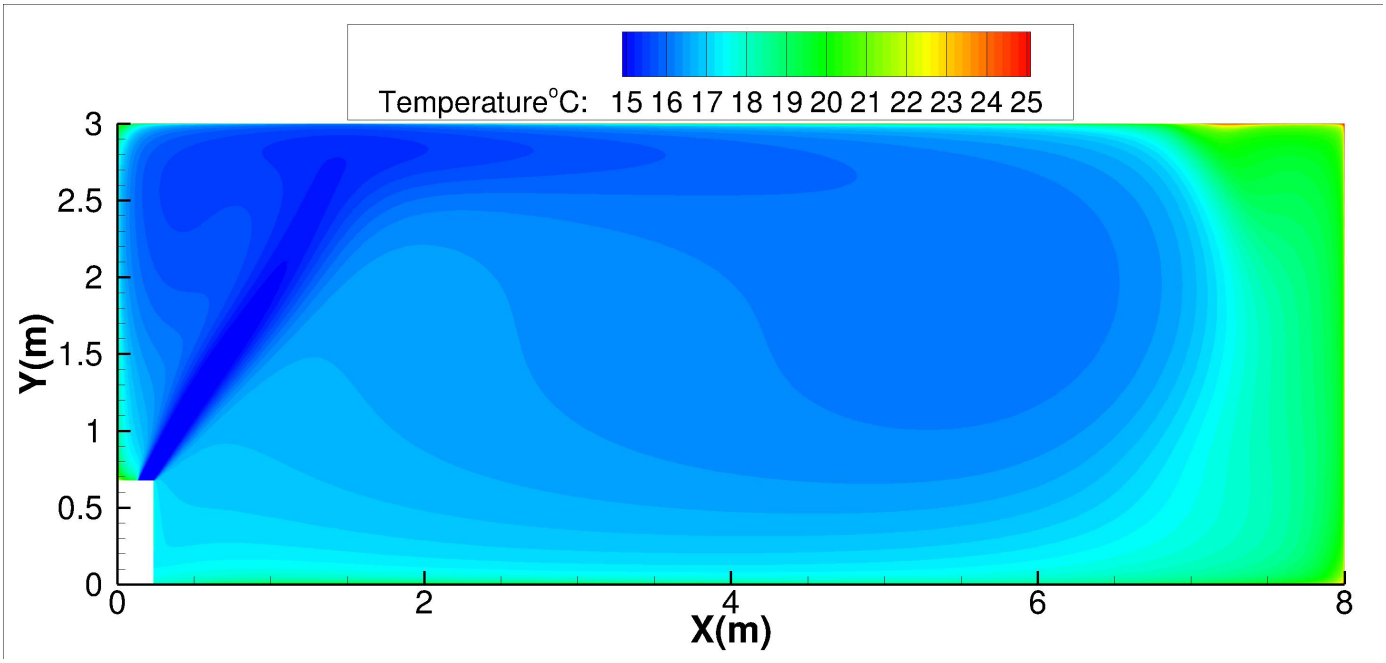

60K-Floor installation:

Discharge Angle 30°

Heating airflow velocity distributions

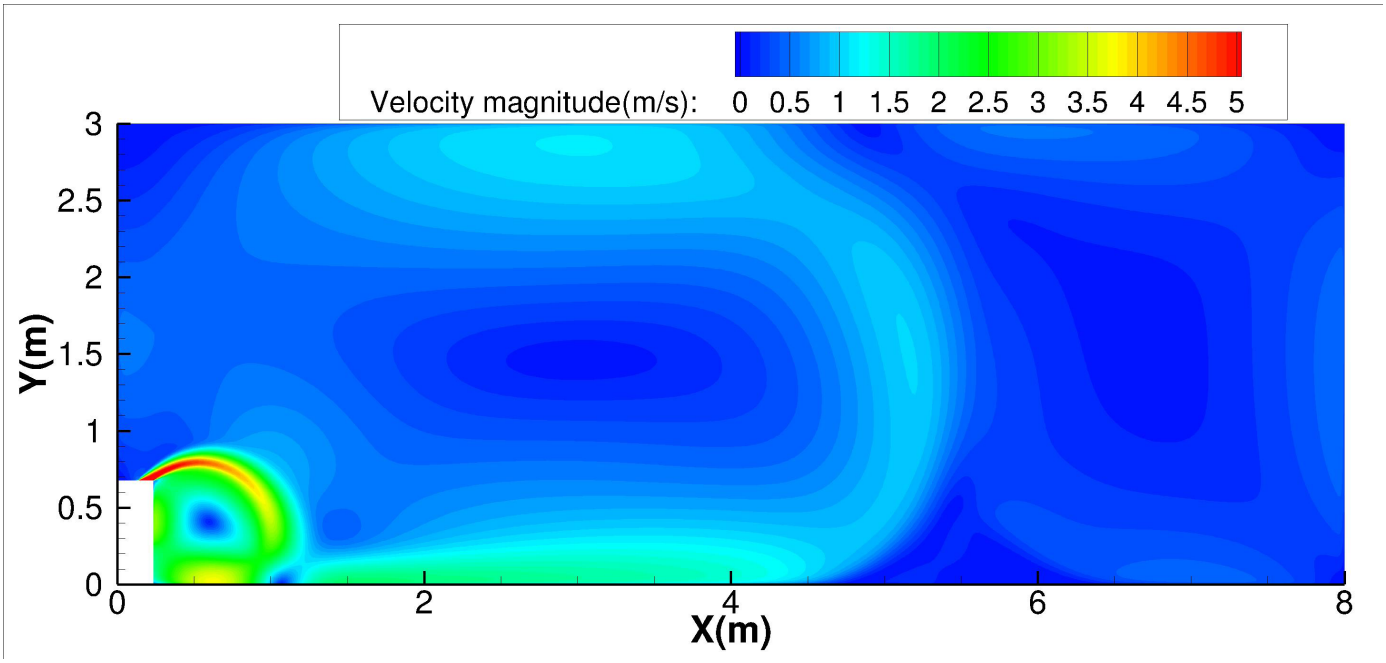

Heating temperature distributions

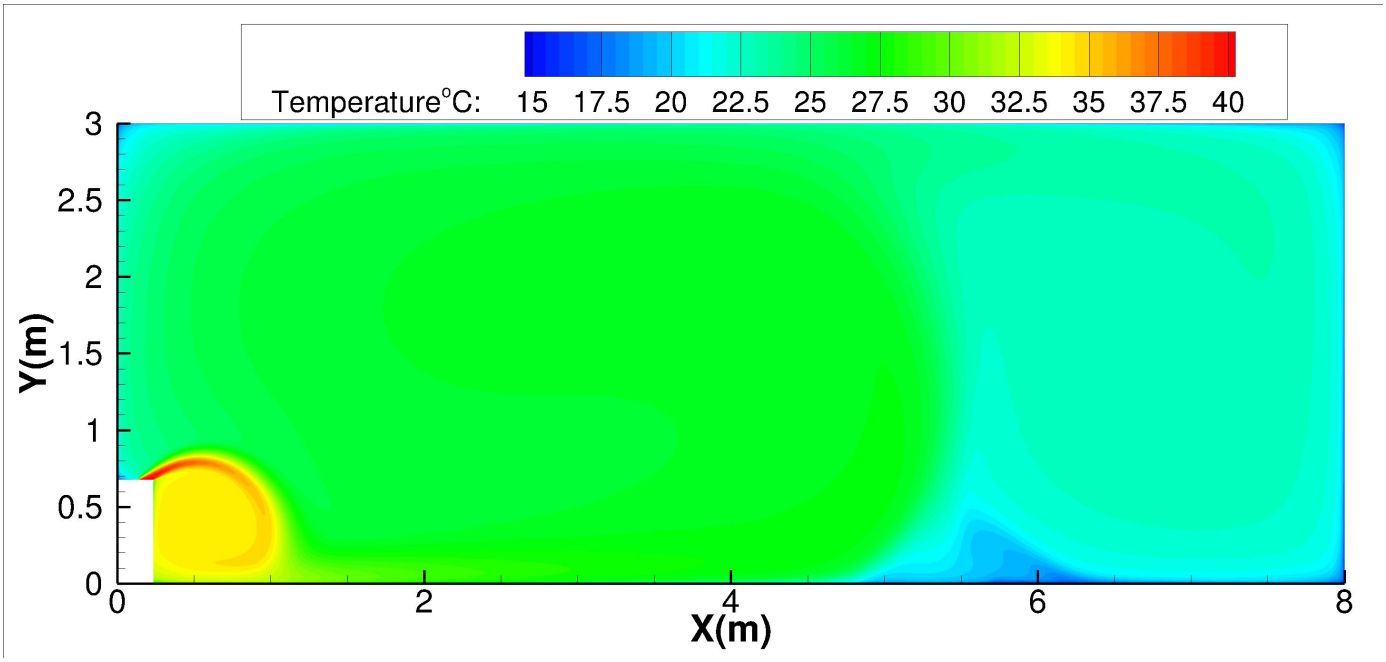

60K-Floor installation:

Discharge Angle 60°

Heating airflow velocity distributions

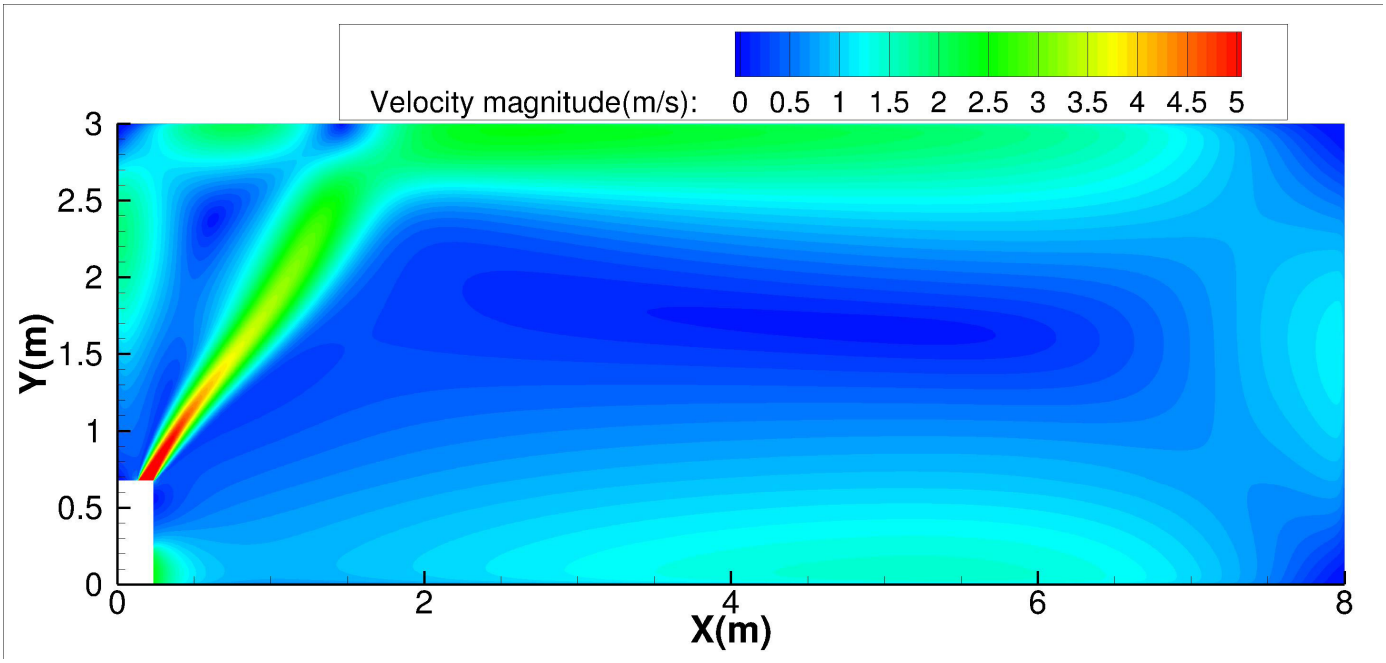

Heating temperature distributions

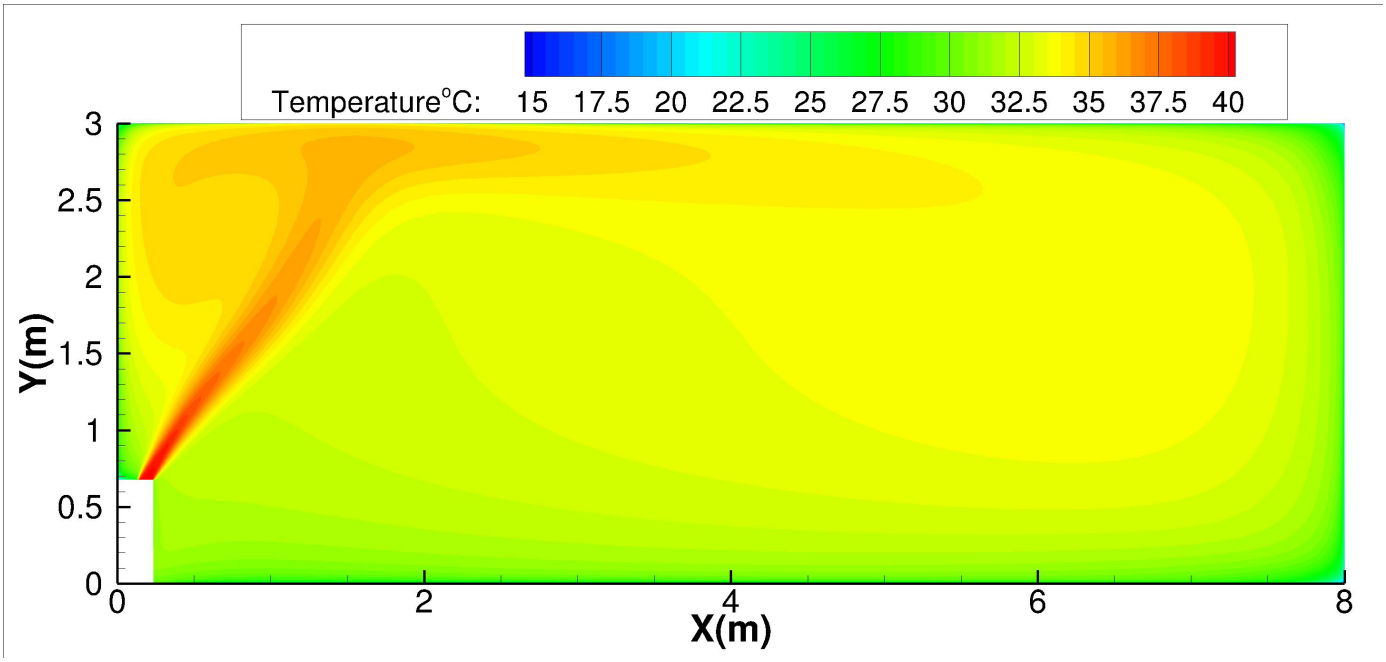

7. Capacity Tables

7.1 Cooling

18k																		
INDOOR AIRFLOW (CMH)	OUTDOOR DB(℃)	ID WB (℃)	16.0				18.0				19.0				22.0			
		ID DB (℃)	23.0	25.0	27.0	29.0	23.0	25.0	27.0	29.0	23.0	25.0	27.0	29.0	23.0	25.0	27.0	29.0
723	-15	TC	5.50	5.50	5.56	5.62	5.78	5.90	5.90	5.96	5.93	5.93	5.93	5.93	6.28	6.28	6.28	6.28
		S/T	0.70	0.79	0.88	0.97	0.57	0.65	0.73	0.82	0.50	0.58	0.66	0.74	0.35	0.42	0.49	0.57
		PI	0.96	0.97	0.97	0.96	0.96	0.96	0.96	0.96	0.96	0.96	0.96	0.96	0.96	0.96	0.96	0.96
	-10	TC	5.46	5.47	5.53	5.59	5.75	5.87	5.87	5.93	5.90	5.90	5.90	5.90	6.25	6.25	6.25	6.25
		S/T	0.71	0.80	0.88	0.97	0.57	0.65	0.74	0.82	0.50	0.58	0.66	0.75	0.35	0.43	0.49	0.57
		PI	0.96	0.96	0.96	0.96	0.96	0.96	0.96	0.96	0.96	0.96	0.96	0.96	0.96	0.96	0.96	0.96
	-5	TC	5.43	5.43	5.49	5.55	5.73	5.85	5.85	5.91	5.88	5.88	5.88	5.88	6.24	6.24	6.24	6.24
		S/T	0.71	0.80	0.89	0.98	0.58	0.66	0.74	0.83	0.51	0.59	0.66	0.75	0.35	0.43	0.50	0.58
		PI	0.96	0.96	0.96	0.96	0.95	0.95	0.95	0.95	0.96	0.96	0.96	0.96	0.96	0.96	0.96	0.96
	0	TC	5.40	5.41	5.47	5.53	5.71	5.83	5.83	5.88	5.87	5.87	5.87	5.87	6.23	6.23	6.23	6.23
		S/T	0.72	0.80	0.89	0.98	0.58	0.66	0.74	0.83	0.51	0.59	0.67	0.75	0.35	0.43	0.50	0.58
		PI	0.96	0.96	0.96	0.96	0.96	0.96	0.96	0.96	0.96	0.96	0.96	0.96	0.97	0.97	0.97	0.97
	5	TC	5.38	5.38	5.44	5.50	5.68	5.80	5.80	5.86	5.85	5.85	5.85	5.85	6.23	6.23	6.23	6.23
		S/T	0.72	0.81	0.90	0.99	0.58	0.66	0.75	0.84	0.51	0.59	0.67	0.76	0.35	0.43	0.50	0.58
		PI	0.97	0.97	0.97	0.97	0.97	0.97	0.97	0.97	0.97	0.97	0.97	0.97	0.97	0.97	0.97	0.97
	10	TC	5.34	5.35	5.41	5.46	5.66	5.78	5.78	5.83	5.82	5.82	5.82	5.82	6.21	6.21	6.21	6.21
		S/T	0.72	0.81	0.90	0.99	0.58	0.67	0.75	0.84	0.51	0.59	0.67	0.76	0.36	0.44	0.50	0.58
		PI	0.99	0.99	0.99	0.99	0.98	0.98	0.98	0.98	0.98	0.98	0.98	0.98	0.99	0.99	0.99	0.99
	15	TC	5.30	5.30	5.36	5.42	5.62	5.74	5.74	5.80	5.79	5.79	5.79	5.79	6.19	6.19	6.19	6.19
		S/T	0.73	0.82	0.91	1.00	0.59	0.67	0.76	0.85	0.52	0.60	0.68	0.77	0.36	0.44	0.51	0.59
		PI	1.01	1.01	1.01	1.01	1.00	1.00	1.00	1.00	1.00	1.00	1.00	1.00	1.01	1.01	1.01	1.01
	20	TC	5.24	5.24	5.30	5.36	5.56	5.56	5.56	5.56	5.73	5.73	5.73	5.73	6.13	6.13	6.13	6.13
		S/T	0.73	0.82	0.91	1.00	0.59	0.67	0.76	0.85	0.52	0.60	0.68	0.77	0.36	0.44	0.51	0.59
		PI	1.05	1.05	1.05	1.05	1.04	1.04	1.04	1.04	1.04	1.04	1.04	1.04	1.04	1.04	1.04	1.04
	25	TC	4.99	4.99	5.04	5.10	5.30	5.30	5.30	5.30	5.47	5.47	5.47	5.47	5.87	5.87	5.87	5.87
		S/T	0.74	0.84	0.93	1.00	0.59	0.68	0.77	0.86	0.52	0.61	0.69	0.78	0.35	0.44	0.52	0.60
		PI	1.16	1.16	1.16	1.16	1.16	1.16	1.16	1.16	1.16	1.16	1.16	1.16	1.16	1.16	1.16	1.16
	30	TC	4.76	4.76	4.81	4.87	5.07	5.07	5.07	5.07	5.22	5.22	5.22	5.22	5.62	5.62	5.62	5.62
		S/T	0.75	0.86	0.95	1.00	0.59	0.69	0.79	0.88	0.52	0.61	0.71	0.80	0.35	0.44	0.52	0.61
		PI	1.26	1.26	1.26	1.26	1.26	1.26	1.26	1.26	1.26	1.26	1.26	1.26	1.27	1.27	1.27	1.27
	35	TC	4.53	4.53	4.59	4.64	4.81	4.81	4.81	4.87	4.96	4.96	5.04	4.96	5.36	5.36	5.36	5.36
		S/T	0.77	0.87	0.97	1.00	0.60	0.70	0.80	0.90	0.52	0.62	0.71	0.82	0.35	0.44	0.53	0.62
		PI	1.38	1.38	1.38	1.38	1.39	1.39	1.39	1.39	1.39	1.39	1.39	1.39	1.40	1.40	1.40	1.40
	40	TC	4.23	4.24	4.28	4.33	4.50	4.50	4.50	4.54	4.64	4.64	4.68	4.64	5.01	5.01	5.01	5.01
		S/T	0.79	0.91	1.00	1.00	0.61	0.72	0.83	0.94	0.53	0.64	0.74	0.85	0.34	0.44	0.54	0.64
		PI	1.52	1.52	1.52	1.52	1.53	1.53	1.53	1.53	1.53	1.53	1.53	1.53	1.54	1.54	1.54	1.54
	46	TC	3.92	3.94	3.97	4.00	4.17	4.17	4.17	4.20	4.31	4.31	4.31	4.31	4.65	4.65	4.65	4.65
		S/T	0.81	0.92	1.00	1.00	0.62	0.74	0.85	0.96	0.53	0.65	0.76	0.87	0.34	0.44	0.55	0.65
		PI	1.69	1.69	1.69	1.69	1.70	1.70	1.70	1.70	1.70	1.70	1.70	1.70	1.72	1.72	1.72	1.72
	50	TC	3.66	3.69	3.72	3.75	3.92	3.92	3.92	3.94	4.06	4.06	4.06	4.09	4.40	4.40	4.40	4.40
		S/T	0.83	0.95	1.00	1.00	0.63	0.75	0.88	0.99	0.54	0.66	0.78	0.89	0.34	0.44	0.55	0.66
		PI	1.83	1.83	1.83	1.83	1.84	1.84	1.84	1.84	1.85	1.85	1.85	1.85	1.86	1.86	1.86	1.86

839	-15	TC	5.62	5.62	5.68	5.74	5.90	5.90	5.90	5.96	6.06	6.06	6.06	6.06	6.43	6.43	6.43	6.43
		S/T	0.73	0.84	0.98	1.00	0.58	0.68	0.77	0.86	0.50	0.60	0.70	0.78	0.34	0.42	0.51	0.60
		PI	0.98	0.98	0.98	0.98	0.99	0.99	0.99	0.99	0.98	0.98	0.98	0.98	0.98	0.98	0.98	0.98
	-10	TC	5.59	5.59	5.65	5.71	5.87	5.87	5.87	5.93	6.03	6.03	6.03	6.03	6.40	6.40	6.40	6.40
		S/T	0.74	0.84	0.99	1.00	0.58	0.68	0.78	0.86	0.50	0.60	0.70	0.79	0.34	0.43	0.51	0.60
		PI	0.98	0.98	0.98	0.98	0.98	0.98	0.98	0.98	0.98	0.98	0.98	0.98	0.98	0.98	0.98	0.98
	-5	TC	5.56	5.56	5.62	5.67	5.85	5.85	5.85	5.91	6.00	6.00	6.00	6.00	6.39	6.39	6.39	6.39
		S/T	0.74	0.85	0.99	1.00	0.59	0.68	0.78	0.87	0.51	0.60	0.70	0.79	0.34	0.43	0.52	0.60
		PI	0.98	0.98	0.98	0.98	0.98	0.98	0.98	0.98	0.98	0.98	0.98	0.98	0.98	0.98	0.98	0.98
	0	TC	5.53	5.53	5.59	5.65	5.83	5.83	5.83	5.88	5.99	5.99	5.99	5.99	6.38	6.38	6.38	6.38
		S/T	0.74	0.85	1.00	1.00	0.59	0.69	0.78	0.87	0.51	0.61	0.71	0.79	0.34	0.43	0.52	0.61
		PI	0.98	0.98	0.98	0.98	0.99	0.99	0.99	0.99	0.98	0.98	0.98	0.98	0.99	0.99	0.99	0.99
	5	TC	5.50	5.50	5.56	5.62	5.80	5.80	5.80	5.86	5.97	5.97	5.97	5.97	6.38	6.38	6.38	6.38
		S/T	0.75	0.86	1.00	1.00	0.59	0.69	0.79	0.88	0.51	0.61	0.71	0.80	0.34	0.43	0.52	0.61
		PI	0.99	0.99	0.99	0.99	0.99	0.99	0.99	0.99	0.99	0.99	0.99	0.99	0.99	0.99	0.99	0.99
	10	TC	5.47	5.47	5.53	5.58	5.78	5.78	5.78	5.83	5.94	5.94	5.94	5.94	6.36	6.36	6.36	6.36
		S/T	0.75	0.86	1.00	1.00	0.59	0.69	0.79	0.88	0.51	0.61	0.71	0.80	0.35	0.44	0.52	0.61
		PI	1.01	1.01	1.01	1.01	1.01	1.01	1.01	1.01	1.00	1.00	1.00	1.00	1.01	1.01	1.01	1.01
	15	TC	5.42	5.42	5.48	5.54	5.74	5.74	5.74	5.80	5.91	5.91	5.91	5.91	6.33	6.33	6.33	6.33
		S/T	0.76	0.87	0.97	1.00	0.60	0.70	0.80	0.89	0.52	0.62	0.72	0.81	0.35	0.44	0.53	0.62
		PI	1.03	1.03	1.03	1.03	1.03	1.03	1.03	1.03	1.02	1.02	1.02	1.02	1.03	1.03	1.03	1.03
	20	TC	5.36	5.36	5.42	5.48	5.68	5.68	5.68	5.73	5.85	5.85	5.85	5.85	6.28	6.28	6.28	6.28
		S/T	0.76	0.87	0.97	1.00	0.60	0.70	0.80	0.89	0.52	0.62	0.72	0.81	0.35	0.44	0.53	0.62
		PI	1.07	1.07	1.07	1.07	1.07	1.07	1.07	1.07	1.06	1.06	1.06	1.06	1.06	1.06	1.06	1.06
	25	TC	5.10	5.10	5.16	5.22	5.42	5.42	5.42	5.48	5.59	5.59	5.59	5.59	6.02	6.02	6.02	6.02
		S/T	0.77	0.88	0.99	1.00	0.61	0.71	0.81	0.91	0.53	0.63	0.73	0.83	0.35	0.44	0.53	0.63
		PI	1.18	1.18	1.18	1.18	1.18	1.18	1.18	1.18	1.18	1.18	1.18	1.18	1.18	1.18	1.18	1.18
	30	TC	4.87	4.93	4.99	5.05	5.19	5.19	5.19	5.25	5.33	5.33	5.33	5.33	5.76	5.76	5.76	5.76
		S/T	0.79	0.90	1.00	1.00	0.61	0.72	0.83	0.93	0.53	0.64	0.74	0.85	0.34	0.44	0.54	0.64
		PI	1.29	1.29	1.29	1.29	1.29	1.29	1.29	1.29	1.29	1.29	1.29	1.29	1.30	1.30	1.30	1.30
	35	TC	4.62	4.67	4.73	4.79	4.93	4.93	4.93	4.99	5.07	5.07	5.16	5.07	5.48	5.48	5.48	5.48
		S/T	0.80	0.92	1.00	1.00	0.62	0.73	0.85	0.96	0.53	0.64	0.75	0.87	0.34	0.44	0.54	0.65
		PI	1.41	1.41	1.41	1.41	1.41	1.41	1.41	1.41	1.42	1.42	1.42	1.42	1.42	1.42	1.42	1.42
	40	TC	4.34	4.39	4.43	4.47	4.63	4.63	4.66	4.71	4.77	4.77	4.82	4.80	5.16	5.16	5.16	5.16
		S/T	0.83	0.96	1.00	1.00	0.63	0.76	0.88	1.00	0.54	0.66	0.79	0.90	0.33	0.45	0.56	0.67
		PI	1.56	1.56	1.56	1.56	1.56	1.56	1.56	1.56	1.56	1.56	1.56	1.56	1.57	1.57	1.57	1.57
	46	TC	4.03	4.06	4.09	4.12	4.29	4.29	4.34	4.40	4.43	4.43	4.43	4.49	4.80	4.80	4.80	4.80
		S/T	0.85	0.98	1.00	1.00	0.64	0.77	0.90	1.00	0.55	0.67	0.80	0.92	0.33	0.45	0.57	0.68
		PI	1.73	1.73	1.73	1.73	1.74	1.74	1.74	1.74	1.74	1.74	1.74	1.74	1.75	1.75	1.75	1.75
	50	TC	3.77	3.80	3.83	3.86	4.03	4.03	4.06	4.09	4.17	4.17	4.17	4.20	4.52	4.52	4.52	4.52
		S/T	0.87	1.00	1.00	1.00	0.66	0.80	0.93	1.00	0.56	0.69	0.82	0.96	0.33	0.45	0.58	0.91
		PI	1.87	1.87	1.87	1.87	1.88	1.88	1.88	1.88	1.89	1.89	1.89	1.89	1.90	1.90	1.90	1.90
958	-15	TC	5.74	5.80	5.86	5.92	6.05	6.05	6.05	6.11	6.20	6.20	6.20	6.20	6.57	6.57	6.57	6.57
		S/T	0.76	0.87	1.00	1.00	0.59	0.70	0.80	0.98	0.51	0.62	0.72	0.82	0.33	0.42	0.52	0.62
		PI	1.00	1.00	1.00	1.00	1.00	1.00	1.00	1.00	1.00	1.00	1.00	1.00	1.00	1.00	1.00	1.00
	-10	TC	5.71	5.77	5.83	5.89	6.02	6.02	6.02	6.08	6.17	6.17	6.17	6.17	6.55	6.55	6.55	6.55
		S/T	0.77	0.87	1.00	1.00	0.59	0.70	0.81	0.98	0.51	0.62	0.73	0.82	0.33	0.43	0.52	0.62
		PI	1.00	1.00	1.00	1.00	1.00	1.00	1.00	1.00	1.00	1.00	1.00	1.00	1.00	1.00	1.00	1.00
	-5	TC	5.67	5.73	5.79	5.85	6.00	6.00	6.00	6.06	6.15	6.15	6.15	6.15	6.53	6.53	6.53	6.53
		S/T	0.77	0.88	1.00	1.00	0.59	0.70	0.81	0.99	0.52	0.62	0.73	0.83	0.33	0.43	0.53	0.62
		PI	1.00	1.00	1.00	1.00	1.00	1.00	1.00	1.00	1.00	1.00	1.00	1.00	1.00	1.00	1.00	1.00
	0	TC	5.65	5.71	5.76	5.82	5.97	5.97	5.97	6.03	6.13	6.13	6.13	6.13	6.53	6.53	6.53	6.53
		S/T	0.77	0.88	1.00	1.00	0.60	0.71	0.81	0.99	0.52	0.63	0.74	0.83	0.33	0.43	0.53	0.63
		PI	1.00	1.00	1.00	1.00	1.00	1.00	1.00	1.00	1.01	1.01	1.01	1.01	1.00	1.00	1.00	1.00
	5	TC	5.62	5.68	5.74	5.79	5.95	5.95	5.95	6.01	6.11	6.11	6.11	6.11	6.52	6.52	6.52	6.52
		S/T	0.78	0.89	1.00	1.00	0.60	0.71	0.82	1.00	0.52	0.63	0.74	0.84	0.33	0.43	0.53	0.63
		PI	1.01	1.01	1.01	1.01	1.01	1.01	1.01	1.01	1.01	1.01	1.01	1.01	1.01	1.01	1.01	1.01
	10	TC	5.58	5.64	5.70	5.76	5.92	5.92	5.92	5.98	6.09	6.09	6.09	6.09	6.51	6.51	6.51	6.51
		S/T	0.78	0.89	1.00	1.00	0.60	0.71	0.82	1.00	0.52	0.63	0.74	0.84	0.34	0.44	0.53	0.63
		PI	1.03	1.03	1.03	1.03	1.03	1.03	1.03	1.03	1.03	1.03	1.03	1.03	1.02	1.02	1.02	1.02
	15	TC	5.54	5.60	5.65	5.71	5.88	5.88	5.88	5.94	6.05	6.05	6.05	6.05	6.48	6.48	6.48	6.48
		S/T	0.79	0.90	1.00	1.00	0.61	0.72	0.83	0.94	0.53	0.64	0.75	0.85	0.34	0.44	0.54	0.64
		PI	1.05	1.05	1.05	1.05	1.05	1.05	1.05	1.05	1.05	1.05	1.05	1.05	1.05	1.05	1.05	1.05
	20	TC	5.48	5.53	5.59	5.65	5.82	5.82	5.82	5.88	5.99	5.99	5.99	5.99	6.42	6.42	6.42	6.42
		S/T	0.79	0.90	1.00	1.00	0.61	0.72	0.83	0.94	0.53	0.64	0.75	0.85	0.34	0.44	0.54	0.64
		PI	1.09	1.09	1.09	1.09	1.09	1.09	1.09	1.09	1.09	1.09	1.09	1.09	1.08	1.08	1.08	1.08
	25	TC	5.22	5.28	5.33	5.39	5.56	5.56	5.56	5.62	5.73	5.73	5.73	5.73	6.16	6.16	6.16	6.16
		S/T	0.81	0.92	1.00	1.00	0.62	0.74	0.85	0.96	0.54	0.65	0.76	0.87	0.34	0.44	0.55	0.65
		PI	1.21	1.21	1.21	1.21	1.21	1.21	1.21	1.21	1.21	1.21	1.21	1.21	1.21	1.21	1.21	1.21
	30	TC	4.99	5.05	5.10	5.16	5.30	5.30	5.30	5.36	5.45	5.45	5.45	5.50	5.88	5.88	5.88	5.88
		S/T	0.82	0.94	1.00	1.00	0.63	0.75	0.87	0.99	0.54	0.66	0.78	0.89	0.34	0.44	0.55	0.66
		PI	1.31	1.31	1.31	1.31	1.32	1.32	1.32	1.32	1.32	1.32	1.32	1.32	1.32	1.32	1.32	1.32
	35	TC	4.73	4.79	4.85	4.90	5.05	5.05	5.10	5.16	5.19	5.19	**5.28**	5.33	5.59	5.59	5.59	5.59
		S/T	0.84	0.97	1.00	1.00	0.64	0.77	0.89	1.00	0.55	0.67	**0.79**	0.90	0.33	0.45	0.56	0.68
		PI	1.44	1.44	1.44	1.44	1.44	1.44	1.44	1.44	1.45	1.45	**1.45**	1.45	1.46	1.46	1.46	1.46
	40	TC	4.44	4.49	4.53	4.58	4.74	4.74	4.80	4.86	4.89	4.89	4.93	4.99	5.27	5.27	5.27	5.27
		S/T	0.88	1.00	1.00	1.00	0.66	0.80	0.93	1.00	0.56	0.69	0.83	0.96	0.33	0.45	0.58	0.90
		PI	1.58	1.58	1.58	1.58	1.59	1.59	1.59	1.59	1.60	1.60	1.60	1.60	1.61	1.61	1.61	1.61
	46	TC	4.12	4.14	4.17	4.20	4.40	4.40	4.46	4.52	4.54	4.54	4.54	4.60	4.92	4.92	4.92	4.92
		S/T	0.89	1.00	1.00	1.00	0.67	0.81	0.95	1.00	0.56	0.70	0.84	0.98	0.33	0.46	0.59	0.92
		PI	1.76	1.76	1.76	1.76	1.77	1.77	1.77	1.77	1.78	1.78	1.78	1.78	1.79	1.79	1.79	1.79
	50	TC	3.86	3.89	3.92	3.94	4.12	4.12	4.14	4.17	4.26	4.26	4.26	4.29	4.63	4.63	4.63	4.63
		S/T	0.92	1.00	1.00	1.00	0.68	0.84	0.99	1.00	0.57	0.72	0.87	1.00	0.32	0.46	0.60	0.97
		PI	1.91	1.91	1.91	1.91	1.92	1.92	1.92	1.92	1.93	1.93	1.93	1.93	1.94	1.94	1.94	1.94

TC:Total Cooling Capacity (kW)

S/T:Sensible Cooling Capacity Ratio

PI:Power Input(kW)

Note: The table shows the case where the operation frequency of a compressor is fixed.

24k																		
INDOOR AIRFLOW (CMH)	OUTDOOR DB(℃)	ID WB (℃)	16.0				18.0				19.0				22.0			
		ID DB (℃)	23.0	25.0	27.0	29.0	23.0	25.0	27.0	29.0	23.0	25.0	27.0	29.0	23.0	25.0	27.0	29.0
853	-15	TC	7.35	7.34	7.34	7.40	7.73	7.88	7.88	7.88	7.93	7.93	7.93	7.93	8.40	8.40	8.40	8.40
		S/T	0.69	0.76	0.84	0.92	0.56	0.63	0.70	0.78	0.49	0.57	0.64	0.71	0.36	0.42	0.49	0.56
		PI	1.53	1.52	1.52	1.53	1.53	1.53	1.53	1.53	1.52	1.52	1.52	1.52	1.52	1.52	1.52	1.52
	-10	TC	7.31	7.30	7.30	7.36	7.69	7.84	7.84	7.84	7.89	7.89	7.89	7.89	8.37	8.37	8.37	8.37
		S/T	0.69	0.77	0.84	0.92	0.56	0.63	0.71	0.79	0.49	0.57	0.64	0.72	0.36	0.43	0.49	0.56
		PI	1.52	1.52	1.52	1.52	1.52	1.52	1.52	1.52	1.51	1.51	1.51	1.51	1.52	1.52	1.52	1.52
	-5	TC	7.26	7.26	7.26	7.32	7.66	7.81	7.81	7.81	7.86	7.86	7.86	7.86	8.35	8.35	8.35	8.35
		S/T	0.69	0.77	0.85	0.93	0.57	0.64	0.71	0.79	0.50	0.58	0.64	0.72	0.36	0.43	0.50	0.57
		PI	1.52	1.51	1.51	1.52	1.52	1.52	1.52	1.52	1.51	1.51	1.51	1.51	1.53	1.53	1.53	1.53
	0	TC	7.23	7.22	7.22	7.28	7.63	7.78	7.78	7.78	7.84	7.84	7.84	7.84	8.34	8.34	8.34	8.34
		S/T	0.70	0.77	0.85	0.93	0.57	0.64	0.72	0.79	0.50	0.58	0.65	0.73	0.36	0.43	0.50	0.57
		PI	1.52	1.52	1.52	1.52	1.53	1.53	1.53	1.53	1.52	1.52	1.52	1.52	1.53	1.53	1.53	1.53
	5	TC	7.19	7.18	7.18	7.24	7.60	7.75	7.75	7.75	7.82	7.82	7.82	7.82	8.34	8.34	8.34	8.34
		S/T	0.70	0.78	0.86	0.94	0.57	0.64	0.72	0.80	0.50	0.58	0.65	0.73	0.36	0.43	0.50	0.57
		PI	1.54	1.53	1.53	1.54	1.54	1.54	1.54	1.54	1.53	1.53	1.53	1.53	1.54	1.54	1.54	1.54
	10	TC	7.15	7.14	7.14	7.20	7.56	7.71	7.71	7.71	7.79	7.79	7.79	7.79	8.31	8.31	8.31	8.31
		S/T	0.70	0.78	0.86	0.94	0.57	0.65	0.72	0.80	0.50	0.58	0.65	0.73	0.37	0.44	0.50	0.57
		PI	1.56	1.56	1.56	1.56	1.56	1.56	1.56	1.56	1.56	1.56	1.56	1.56	1.56	1.56	1.56	1.56
	15	TC	7.09	7.08	7.08	7.14	7.51	7.66	7.66	7.66	7.74	7.74	7.74	7.74	8.28	8.28	8.28	8.28
		S/T	0.71	0.79	0.87	0.95	0.58	0.65	0.73	0.81	0.51	0.59	0.66	0.74	0.37	0.44	0.51	0.58
		PI	1.60	1.60	1.60	1.60	1.60	1.60	1.60	1.60	1.59	1.59	1.59	1.59	1.60	1.60	1.60	1.60
	20	TC	7.01	7.00	7.00	7.06	7.43	7.43	7.43	7.43	7.66	7.66	7.66	7.66	8.21	8.21	8.21	8.21
		S/T	0.71	0.79	0.87	0.95	0.58	0.65	0.73	0.81	0.51	0.59	0.66	0.74	0.37	0.44	0.51	0.58
		PI	1.66	1.65	1.65	1.66	1.65	1.65	1.65	1.65	1.64	1.64	1.64	1.64	1.64	1.64	1.64	1.64
	25	TC	6.69	6.69	6.74	6.80	7.09	7.09	7.09	7.09	7.32	7.32	7.32	7.32	7.86	7.86	7.86	7.86
		S/T	0.72	0.80	0.89	0.97	0.58	0.66	0.74	0.82	0.51	0.59	0.67	0.75	0.36	0.44	0.51	0.58
		PI	1.83	1.83	1.83	1.83	1.82	1.82	1.82	1.82	1.82	1.82	1.82	1.82	1.83	1.83	1.83	1.83
	30	TC	6.37	6.37	6.43	6.49	6.77	6.77	6.77	6.77	6.97	6.97	6.97	6.97	7.52	7.52	7.52	7.52
		S/T	0.73	0.82	0.90	0.99	0.58	0.67	0.75	0.84	0.52	0.60	0.68	0.76	0.36	0.44	0.51	0.59
		PI	2.00	2.00	2.00	2.00	2.01	2.01	2.01	2.01	2.01	2.01	2.01	2.01	2.02	2.02	2.02	2.02
	35	TC	6.06	6.06	6.11	6.17	6.43	6.43	6.43	6.43	6.63	6.63	6.74	6.63	7.17	7.17	7.17	7.17
		S/T	0.74	0.83	0.92	1.00	0.59	0.68	0.76	0.85	0.52	0.60	0.69	0.78	0.36	0.44	0.52	0.60
		PI	2.18	2.18	2.18	2.18	2.19	2.19	2.19	2.19	2.20	2.20	2.20	2.20	2.21	2.21	2.21	2.21
	40	TC	5.71	5.71	5.77	5.83	6.07	6.07	6.07	6.10	6.27	6.27	6.34	6.27	6.78	6.78	6.78	6.78
		S/T	0.76	0.86	0.96	1.00	0.60	0.69	0.79	0.89	0.52	0.62	0.71	0.81	0.35	0.44	0.52	0.61
		PI	2.41	2.41	2.41	2.41	2.42	2.42	2.42	2.42	2.43	2.43	2.43	2.43	2.44	2.44	2.44	2.44
	46	TC	5.29	5.29	5.35	5.40	5.63	5.63	5.63	5.69	5.83	5.83	5.83	5.83	6.29	6.29	6.29	6.29
		S/T	0.77	0.88	0.98	1.00	0.60	0.70	0.81	0.90	0.52	0.62	0.72	0.82	0.35	0.44	0.53	0.62
		PI	2.68	2.68	2.68	2.68	2.69	2.69	2.69	2.69	2.70	2.70	2.70	2.70	2.72	2.72	2.72	2.72
	50	TC	4.94	5.00	5.06	5.12	5.29	5.29	5.29	5.35	5.49	5.49	5.49	5.49	5.95	5.95	5.95	5.95
		S/T	0.79	0.90	1.00	1.00	0.61	0.72	0.83	0.93	0.53	0.63	0.74	0.84	0.34	0.44	0.54	0.63
		PI	2.91	2.91	2.91	2.91	2.92	2.92	2.92	2.92	2.93	2.93	2.93	2.93	2.95	2.95	2.95	2.95
1023	-15	TC	7.50	7.50	7.56	7.65	7.88	7.88	7.88	7.88	8.09	8.09	8.09	8.09	8.58	8.58	8.58	8.58
		S/T	0.71	0.81	0.98	1.00	0.57	0.66	0.74	0.83	0.50	0.59	0.67	0.75	0.34	0.42	0.50	0.58
		PI	1.56	1.56	1.56	1.56	1.55	1.55	1.55	1.55	1.55	1.55	1.55	1.55	1.55	1.55	1.55	1.55
	-10	TC	7.45	7.45	7.51	7.60	7.84	7.84	7.84	7.84	8.05	8.05	8.05	8.05	8.55	8.55	8.55	8.55
		S/T	0.72	0.82	0.99	1.00	0.57	0.66	0.75	0.83	0.50	0.59	0.67	0.76	0.34	0.43	0.50	0.58
		PI	1.55	1.55	1.55	1.55	1.55	1.55	1.55	1.55	1.55	1.55	1.55	1.55	1.55	1.55	1.55	1.55
	-5	TC	7.41	7.41	7.47	7.56	7.81	7.81	7.81	7.81	8.02	8.02	8.02	8.02	8.53	8.53	8.53	8.53
		S/T	0.72	0.82	0.99	1.00	0.58	0.66	0.75	0.84	0.51	0.59	0.67	0.76	0.34	0.43	0.51	0.59
		PI	1.55	1.55	1.55	1.55	1.55	1.55	1.55	1.55	1.55	1.55	1.55	1.55	1.55	1.55	1.55	1.55
	0	TC	7.37	7.37	7.43	7.52	7.78	7.78	7.78	7.78	7.99	7.99	7.99	7.99	8.52	8.52	8.52	8.52
		S/T	0.73	0.82	1.00	1.00	0.58	0.67	0.75	0.84	0.51	0.60	0.68	0.76	0.34	0.43	0.51	0.59
		PI	1.56	1.56	1.56	1.56	1.55	1.55	1.55	1.55	1.56	1.56	1.56	1.56	1.56	1.56	1.56	1.56
	5	TC	7.33	7.33	7.39	7.48	7.75	7.75	7.75	7.75	7.97	7.97	7.97	7.97	8.51	8.51	8.51	8.51
		S/T	0.73	0.83	1.00	1.00	0.58	0.67	0.76	0.85	0.51	0.60	0.68	0.77	0.34	0.43	0.51	0.59
		PI	1.57	1.57	1.57	1.57	1.57	1.57	1.57	1.57	1.57	1.57	1.57	1.57	1.57	1.57	1.57	1.57
	10	TC	7.29	7.29	7.35	7.44	7.71	7.71	7.71	7.71	7.93	7.93	7.93	7.93	8.49	8.49	8.49	8.49
		S/T	0.73	0.83	1.00	1.00	0.58	0.67	0.76	0.85	0.51	0.60	0.68	0.77	0.35	0.44	0.51	0.59
		PI	1.60	1.60	1.60	1.60	1.59	1.59	1.59	1.59	1.59	1.59	1.59	1.59	1.59	1.59	1.59	1.59
	15	TC	7.23	7.23	7.29	7.38	7.66	7.66	7.66	7.66	7.89	7.89	7.89	7.89	8.46	8.46	8.46	8.46
		S/T	0.74	0.84	0.93	1.00	0.59	0.68	0.77	0.86	0.52	0.61	0.69	0.78	0.35	0.44	0.52	0.60
		PI	1.64	1.64	1.64	1.64	1.63	1.63	1.63	1.63	1.63	1.63	1.63	1.63	1.62	1.62	1.62	1.62
	20	TC	7.15	7.15	7.21	7.29	7.58	7.58	7.58	7.58	7.81	7.81	7.81	7.81	8.38	8.38	8.38	8.38
		S/T	0.74	0.84	0.93	1.00	0.59	0.68	0.77	0.86	0.52	0.61	0.69	0.78	0.35	0.44	0.52	0.60
		PI	1.69	1.69	1.69	1.69	1.68	1.68	1.68	1.68	1.68	1.68	1.68	1.68	1.67	1.67	1.67	1.67
	25	TC	6.83	6.83	6.89	6.95	7.26	7.26	7.26	7.26	7.46	7.46	7.46	7.46	8.04	8.04	8.04	8.04
		S/T	0.75	0.85	0.95	1.00	0.59	0.69	0.78	0.88	0.52	0.61	0.70	0.80	0.35	0.44	0.52	0.61
		PI	1.87	1.87	1.87	1.87	1.87	1.87	1.87	1.87	1.87	1.87	1.87	1.87	1.87	1.87	1.87	1.87
	30	TC	6.52	6.52	6.57	6.63	6.92	6.92	6.92	6.98	7.12	7.12	7.12	7.12	7.69	7.69	7.69	7.69
		S/T	0.76	0.87	0.97	1.00	0.60	0.70	0.80	0.89	0.52	0.62	0.72	0.81	0.35	0.44	0.53	0.62
		PI	2.05	2.05	2.05	2.05	2.05	2.05	2.05	2.05	2.06	2.06	2.06	2.06	2.06	2.06	2.06	2.06
	35	TC	6.17	6.23	6.29	6.34	6.57	6.57	6.57	6.63	6.78	6.78	6.89	6.78	7.32	7.32	7.32	7.32
		S/T	0.78	0.88	0.99	1.00	0.61	0.71	0.81	0.92	0.53	0.63	0.72	0.83	0.35	0.44	0.53	0.63
		PI	2.23	2.23	2.23	2.23	2.24	2.24	2.24	2.24	2.25	2.25	2.25	2.25	2.25	2.25	2.25	2.25
	40	TC	5.77	5.83	5.89	5.95	6.15	6.15	6.15	6.20	6.35	6.35	6.41	6.35	6.86	6.86	6.86	6.86
		S/T	0.80	0.92	1.00	1.00	0.62	0.73	0.85	0.96	0.53	0.64	0.76	0.87	0.34	0.44	0.54	0.65
		PI	2.46	2.46	2.46	2.46	2.48	2.48	2.48	2.48	2.48	2.48	2.48	2.48	2.50	2.50	2.50	2.50
	46	TC	5.35	5.41	5.47	5.53	5.70	5.70	5.70	5.75	5.90	5.90	5.90	5.90	6.38	6.38	6.38	6.38
		S/T	0.82	0.94	1.00	1.00	0.63	0.75	0.87	0.98	0.54	0.65	0.77	0.88	0.34	0.44	0.55	0.66
		PI	2.74	2.74	2.74	2.74	2.76	2.76	2.76	2.76	2.76	2.76	2.76	2.76	2.79	2.79	2.79	2.79
	50	TC	5.01	5.07	5.13	5.18	5.35	5.35	5.41	5.47	5.55	5.55	5.55	5.61	6.01	6.01	6.01	6.01
		S/T	0.84	0.97	1.00	1.00	0.64	0.77	0.89	1.00	0.54	0.67	0.79	0.91	0.33	0.45	0.56	0.91
		PI	2.98	2.98	2.98	2.98	2.99	2.99	2.99	2.99	3.00	3.00	3.00	3.00	3.02	3.02	3.02	3.02

1192	-15	TC	7.68	7.68	7.77	7.86	8.06	8.06	8.06	8.15	8.26	8.26	8.26	8.26	8.79	8.79	8.79	8.79
		S/T	0.74	0.85	1.00	1.00	0.58	0.69	0.78	0.98	0.51	0.61	0.70	0.80	0.34	0.42	0.51	0.60
		PI	1.60	1.60	1.60	1.60	1.59	1.59	1.59	1.59	1.59	1.59	1.59	1.59	1.59	1.59	1.59	1.59
	-10	TC	7.63	7.63	7.72	7.81	8.02	8.02	8.02	8.10	8.22	8.22	8.22	8.22	8.76	8.76	8.76	8.76
		S/T	0.75	0.85	1.00	1.00	0.58	0.69	0.79	0.98	0.51	0.61	0.71	0.81	0.34	0.43	0.51	0.60
		PI	1.59	1.59	1.59	1.59	1.59	1.59	1.59	1.59	1.59	1.59	1.59	1.59	1.59	1.59	1.59	1.59
	-5	TC	7.59	7.59	7.68	7.77	7.99	7.99	7.99	8.07	8.19	8.19	8.19	8.19	8.73	8.73	8.73	8.73
		S/T	0.75	0.86	1.00	1.00	0.59	0.69	0.79	0.99	0.52	0.61	0.71	0.81	0.34	0.43	0.52	0.60
		PI	1.59	1.59	1.59	1.59	1.58	1.58	1.58	1.58	1.59	1.59	1.59	1.59	1.59	1.59	1.59	1.59
	0	TC	7.55	7.55	7.64	7.73	7.96	7.96	7.96	8.04	8.17	8.17	8.17	8.17	8.73	8.73	8.73	8.73
		S/T	0.75	0.86	1.00	1.00	0.59	0.70	0.79	0.99	0.52	0.62	0.72	0.81	0.34	0.43	0.52	0.61
		PI	1.59	1.59	1.59	1.59	1.59	1.59	1.59	1.59	1.59	1.59	1.59	1.59	1.60	1.60	1.60	1.60
	5	TC	7.51	7.51	7.60	7.69	7.93	7.93	7.93	8.01	8.14	8.14	8.14	8.14	8.72	8.72	8.72	8.72
		S/T	0.76	0.87	1.00	1.00	0.59	0.70	0.80	1.00	0.52	0.62	0.72	0.82	0.34	0.43	0.52	0.61
		PI	1.61	1.61	1.61	1.61	1.60	1.60	1.60	1.60	1.61	1.61	1.61	1.61	1.61	1.61	1.61	1.61
	10	TC	7.47	7.47	7.55	7.64	7.89	7.89	7.89	7.98	8.11	8.11	8.11	8.11	8.70	8.70	8.70	8.70
		S/T	0.76	0.87	1.00	1.00	0.59	0.70	0.80	1.00	0.52	0.62	0.72	0.82	0.35	0.44	0.52	0.61
		PI	1.63	1.63	1.63	1.63	1.63	1.63	1.63	1.63	1.63	1.63	1.63	1.63	1.63	1.63	1.63	1.63
	15	TC	7.40	7.40	7.49	7.58	7.83	7.83	7.83	7.92	8.06	8.06	8.06	8.06	8.66	8.66	8.66	8.66
		S/T	0.77	0.88	0.98	1.00	0.60	0.71	0.81	0.91	0.53	0.63	0.73	0.83	0.35	0.44	0.53	0.62
		PI	1.67	1.67	1.67	1.67	1.67	1.67	1.67	1.67	1.67	1.67	1.67	1.67	1.66	1.66	1.66	1.66
	20	TC	7.32	7.32	7.41	7.49	7.75	7.75	7.75	7.84	7.98	7.98	7.98	7.98	8.58	8.58	8.58	8.58
		S/T	0.77	0.88	0.98	1.00	0.60	0.71	0.81	0.91	0.53	0.63	0.73	0.83	0.35	0.44	0.53	0.62
		PI	1.73	1.73	1.73	1.73	1.72	1.72	1.72	1.72	1.72	1.72	1.72	1.72	1.71	1.71	1.71	1.71
	25	TC	6.98	7.03	7.09	7.15	7.41	7.41	7.41	7.49	7.64	7.64	7.64	7.64	8.21	8.21	8.21	8.21
		S/T	0.79	0.90	1.00	1.00	0.61	0.72	0.83	0.93	0.53	0.63	0.74	0.84	0.34	0.44	0.54	0.63
		PI	1.91	1.91	1.91	1.91	1.91	1.91	1.91	1.91	1.91	1.91	1.91	1.91	1.91	1.91	1.91	1.91
	30	TC	6.63	6.69	6.75	6.80	7.06	7.06	7.06	7.12	7.29	7.29	7.29	7.29	7.84	7.84	7.84	7.84
		S/T	0.80	0.92	1.00	1.00	0.62	0.73	0.84	0.95	0.53	0.64	0.75	0.86	0.34	0.44	0.54	0.65
		PI	2.08	2.08	2.08	2.08	2.09	2.09	2.09	2.09	2.09	2.09	2.09	2.09	2.10	2.10	2.10	2.10
	35	TC	6.32	6.37	6.43	6.49	6.72	6.72	6.72	6.78	6.92	6.92	**7.03**	7.09	7.46	7.46	7.46	7.46
		S/T	0.82	0.94	1.00	1.00	0.63	0.75	0.86	0.98	0.54	0.65	**0.76**	0.87	0.34	0.44	0.55	0.66
		PI	2.28	2.28	2.28	2.28	2.29	2.29	2.29	2.29	2.30	2.30	**2.30**	2.30	2.31	2.31	2.31	2.31
	40	TC	5.90	5.96	6.02	6.07	6.29	6.29	6.32	6.37	6.48	6.48	6.54	6.60	7.00	7.00	7.00	7.00
		S/T	0.85	0.98	1.00	1.00	0.64	0.77	0.90	1.00	0.55	0.67	0.80	0.92	0.33	0.45	0.57	0.90
		PI	2.52	2.52	2.52	2.52	2.53	2.53	2.53	2.53	2.54	2.54	2.54	2.54	2.56	2.56	2.56	2.56
	46	TC	5.47	5.53	5.58	5.64	5.84	5.84	5.90	5.95	6.01	6.01	6.01	6.07	6.52	6.52	6.52	6.52
		S/T	0.86	1.00	1.00	1.00	0.65	0.79	0.92	1.00	0.55	0.69	0.82	0.95	0.33	0.45	0.57	0.92
		PI	2.80	2.80	2.80	2.80	2.82	2.82	2.82	2.82	2.82	2.82	2.82	2.82	2.85	2.85	2.85	2.85
	50	TC	5.13	5.18	5.24	5.30	5.47	5.47	5.53	5.58	5.67	5.67	5.67	5.73	6.12	6.12	6.12	6.12
		S/T	0.89	1.00	1.00	1.00	0.67	0.81	0.95	1.00	0.56	0.70	0.84	0.98	0.33	0.45	0.58	0.97
		PI	3.04	3.04	3.04	3.04	3.05	3.05	3.05	3.05	3.06	3.06	3.06	3.06	3.08	3.08	3.08	3.08

TC:Total Cooling Capacity (kW)

S/T:Sensible Cooling Capacity Ratio

PI:Power Input(kW)

Note: The table shows the case where the operation frequency of a compressor is fixed.

36k+YDAX-100H-09M25																		
INDOOR AIRFLOW (CMH)	OUTDOOR DB(℃)	ID WB (℃)	16.0				18.0				19.0				22.0			
		ID DB (℃)	23.0	25.0	27.0	29.0	23.0	25.0	27.0	29.0	23.0	25.0	27.0	29.0	23.0	25.0	27.0	29.0
1504	-15	TC	11.05	11.06	11.18	11.30	11.63	11.87	11.87	11.99	11.90	11.90	11.90	11.90	12.65	12.65	12.65	12.65
		S/T	0.71	0.81	0.90	0.97	0.57	0.66	0.74	0.83	0.50	0.59	0.67	0.75	0.35	0.42	0.50	0.58
		PI	2.60	2.59	2.59	2.60	2.58	2.58	2.58	2.58	2.59	2.59	2.59	2.59	2.58	2.58	2.58	2.58
	-10	TC	10.99	11.00	11.11	11.23	11.56	11.80	11.80	11.92	11.84	11.84	11.84	11.84	12.60	12.60	12.60	12.60
		S/T	0.72	0.82	0.90	0.97	0.57	0.66	0.75	0.83	0.50	0.59	0.67	0.76	0.35	0.43	0.50	0.58
		PI	2.58	2.58	2.58	2.58	2.58	2.58	2.58	2.58	2.58	2.58	2.58	2.58	2.58	2.58	2.58	2.58
	-5	TC	10.92	10.93	11.05	11.17	11.52	11.76	11.76	11.88	11.80	11.80	11.80	11.80	12.57	12.57	12.57	12.57
		S/T	0.72	0.82	0.91	0.98	0.58	0.66	0.75	0.84	0.51	0.59	0.67	0.76	0.35	0.43	0.51	0.59
		PI	2.58	2.57	2.57	2.58	2.57	2.57	2.57	2.57	2.58	2.58	2.58	2.58	2.58	2.58	2.58	2.58
	0	TC	10.87	10.87	10.99	11.11	11.47	11.71	11.71	11.83	11.77	11.77	11.77	11.77	12.56	12.56	12.56	12.56
		S/T	0.73	0.82	0.91	0.98	0.58	0.67	0.75	0.84	0.51	0.60	0.68	0.76	0.35	0.43	0.51	0.59
		PI	2.59	2.58	2.58	2.59	2.58	2.58	2.58	2.58	2.59	2.59	2.59	2.59	2.59	2.59	2.59	2.59
	5	TC	10.81	10.82	10.94	11.06	11.43	11.67	11.67	11.79	11.73	11.73	11.73	11.73	12.55	12.55	12.55	12.55
		S/T	0.73	0.83	0.92	0.99	0.58	0.67	0.76	0.85	0.51	0.60	0.68	0.77	0.35	0.43	0.51	0.59
		PI	2.61	2.61	2.61	2.61	2.61	2.61	2.61	2.61	2.61	2.61	2.61	2.61	2.61	2.61	2.61	2.61
	10	TC	10.75	10.75	10.87	10.99	11.38	11.61	11.61	11.73	11.68	11.68	11.68	11.68	12.52	12.52	12.52	12.52
		S/T	0.73	0.83	0.92	0.99	0.58	0.67	0.76	0.85	0.51	0.60	0.68	0.77	0.36	0.44	0.51	0.59
		PI	2.66	2.65	2.65	2.66	2.65	2.65	2.65	2.65	2.65	2.65	2.65	2.65	2.64	2.64	2.64	2.64
	15	TC	10.66	10.67	10.78	10.90	11.30	11.54	11.54	11.65	11.61	11.61	11.61	11.61	12.46	12.46	12.46	12.46
		S/T	0.74	0.84	0.93	1.00	0.59	0.68	0.77	0.86	0.52	0.61	0.69	0.78	0.36	0.44	0.52	0.60
		PI	2.72	2.72	2.72	2.72	2.71	2.71	2.71	2.71	2.71	2.71	2.71	2.71	2.70	2.70	2.70	2.70
	20	TC	10.54	10.55	10.66	10.78	11.18	11.18	11.18	11.18	11.50	11.50	11.50	11.50	12.36	12.36	12.36	12.36
		S/T	0.74	0.84	0.93	1.00	0.59	0.68	0.77	0.86	0.52	0.61	0.69	0.78	0.36	0.44	0.52	0.60
		PI	2.82	2.81	2.81	2.82	2.80	2.80	2.80	2.80	2.80	2.80	2.80	2.80	2.78	2.78	2.78	2.78
	25	TC	10.06	10.06	10.17	10.29	10.69	10.69	10.69	10.69	11.01	11.01	11.01	11.01	11.84	11.84	11.84	11.84
		S/T	0.75	0.85	0.95	1.00	0.59	0.69	0.78	0.88	0.52	0.61	0.70	0.80	0.35	0.44	0.52	0.61
		PI	3.10	3.10	3.10	3.10	3.10	3.10	3.10	3.10	3.10	3.10	3.10	3.10	3.10	3.10	3.10	3.10
	30	TC	9.57	9.57	9.66	9.74	10.20	10.20	10.20	10.32	10.49	10.49	10.49	10.49	11.32	11.32	11.32	11.32
		S/T	0.76	0.87	0.97	1.00	0.60	0.70	0.80	0.89	0.52	0.62	0.72	0.81	0.35	0.44	0.53	0.62
		PI	3.40	3.40	3.40	3.40	3.41	3.41	3.41	3.41	3.41	3.41	3.41	3.41	3.42	3.42	3.42	3.42
	35	TC	9.11	9.20	9.28	9.37	9.68	9.68	9.68	9.77	10.00	10.00	10.14	10.00	10.78	10.78	10.78	10.78
		S/T	0.78	0.88	0.99	1.00	0.61	0.71	0.81	0.91	0.53	0.63	0.72	0.83	0.35	0.44	0.53	0.63
		PI	3.71	3.71	3.71	3.71	3.73	3.73	3.73	3.73	3.73	3.73	3.74	3.73	3.76	3.76	3.76	3.76
	40	TC	8.58	8.66	8.75	8.84	9.14	9.14	9.14	9.23	9.43	9.43	9.51	9.47	10.18	10.18	10.18	10.18
		S/T	0.80	0.92	1.00	1.00	0.62	0.73	0.85	0.96	0.53	0.65	0.76	0.87	0.34	0.44	0.54	0.65
		PI	4.10	4.10	4.10	4.10	4.12	4.12	4.12	4.12	4.12	4.12	4.13	4.12	4.16	4.16	4.16	4.16
	46	TC	7.93	8.02	8.11	8.19	8.48	8.48	8.48	8.57	8.74	8.74	8.74	8.83	9.46	9.46	9.46	9.46
		S/T	0.82	0.94	1.00	1.00	0.63	0.75	0.86	0.98	0.54	0.65	0.77	0.88	0.34	0.44	0.55	0.66
		PI	4.56	4.56	4.56	4.56	4.58	4.58	4.58	4.58	4.59	4.59	4.59	4.59	4.63	4.63	4.63	4.63
	50	TC	7.45	7.53	7.62	7.70	7.96	7.96	8.05	8.14	8.22	8.22	8.22	8.31	8.91	8.91	8.91	8.91
		S/T	0.84	0.97	1.00	1.00	0.64	0.76	0.89	1.00	0.55	0.67	0.79	0.91	0.33	0.45	0.56	0.67
		PI	4.93	4.93	4.93	4.93	4.95	4.95	4.95	4.95	4.97	4.97	4.97	4.97	5.01	5.01	5.01	5.01
1728	-15	TC	11.28	11.28	11.40	11.52	11.87	11.87	11.87	11.99	12.15	12.15	12.15	12.15	12.92	12.92	12.92	12.92
		S/T	0.74	0.85	0.98	1.00	0.58	0.68	0.78	0.87	0.51	0.60	0.70	0.79	0.34	0.42	0.51	0.60
		PI	2.66	2.66	2.66	2.66	2.64	2.64	2.64	2.64	2.64	2.64	2.64	2.64	2.63	2.63	2.63	2.63
	-10	TC	11.21	11.21	11.33	11.45	11.80	11.80	11.80	11.92	12.08	12.08	12.08	12.08	12.87	12.87	12.87	12.87
		S/T	0.75	0.85	0.99	1.00	0.58	0.68	0.79	0.87	0.51	0.60	0.70	0.80	0.34	0.43	0.51	0.60
		PI	2.64	2.64	2.64	2.64	2.63	2.63	2.63	2.63	2.64	2.64	2.64	2.64	2.63	2.63	2.63	2.63
	-5	TC	11.14	11.14	11.26	11.38	11.76	11.76	11.76	11.88	12.04	12.04	12.04	12.04	12.84	12.84	12.84	12.84
		S/T	0.75	0.86	0.99	1.00	0.59	0.68	0.79	0.88	0.52	0.60	0.70	0.80	0.34	0.43	0.52	0.60
		PI	2.64	2.64	2.64	2.64	2.63	2.63	2.63	2.63	2.64	2.64	2.64	2.64	2.64	2.64	2.64	2.64
	0	TC	11.09	11.09	11.21	11.32	11.71	11.71	11.71	11.83	12.01	12.01	12.01	12.01	12.83	12.83	12.83	12.83
		S/T	0.75	0.86	1.00	1.00	0.59	0.69	0.79	0.88	0.52	0.61	0.71	0.80	0.34	0.43	0.52	0.61
		PI	2.65	2.65	2.65	2.65	2.64	2.64	2.64	2.64	2.65	2.65	2.65	2.65	2.65	2.65	2.65	2.65
	5	TC	11.03	11.03	11.15	11.27	11.67	11.67	11.67	11.79	11.97	11.97	11.97	11.97	12.82	12.82	12.82	12.82
		S/T	0.76	0.87	1.00	1.00	0.59	0.69	0.80	0.89	0.52	0.61	0.71	0.81	0.34	0.43	0.52	0.61
		PI	2.67	2.67	2.67	2.67	2.66	2.66	2.66	2.66	2.67	2.67	2.67	2.67	2.67	2.67	2.67	2.67
	10	TC	10.96	10.96	11.08	11.20	11.61	11.61	11.61	11.73	11.92	11.92	11.92	11.92	12.78	12.78	12.78	12.78
		S/T	0.76	0.87	1.00	1.00	0.59	0.69	0.80	0.89	0.52	0.61	0.71	0.81	0.35	0.44	0.52	0.61
		PI	2.72	2.72	2.72	2.72	2.70	2.70	2.70	2.70	2.71	2.71	2.71	2.71	2.70	2.70	2.70	2.70
	15	TC	10.87	10.87	10.99	11.11	11.54	11.54	11.54	11.65	11.85	11.85	11.85	11.85	12.73	12.73	12.73	12.73
		S/T	0.77	0.88	0.98	1.00	0.60	0.70	0.81	0.90	0.53	0.62	0.72	0.82	0.35	0.44	0.53	0.62
		PI	2.78	2.78	2.78	2.78	2.77	2.77	2.77	2.77	2.77	2.77	2.77	2.77	2.76	2.76	2.76	2.76
	20	TC	10.75	10.75	10.87	10.98	11.41	11.41	11.41	11.53	11.73	11.73	11.73	11.73	12.62	12.62	12.62	12.62
		S/T	0.77	0.88	0.98	1.00	0.60	0.70	0.81	0.90	0.53	0.62	0.72	0.82	0.35	0.44	0.53	0.62
		PI	2.88	2.88	2.88	2.88	2.86	2.86	2.86	2.86	2.86	2.86	2.86	2.86	2.84	2.84	2.84	2.84
	25	TC	10.26	10.38	10.49	10.61	10.90	10.90	10.90	11.01	11.21	11.21	11.21	11.21	12.07	12.07	12.07	12.07
		S/T	0.78	0.89	1.00	1.00	0.61	0.72	0.82	0.92	0.53	0.63	0.74	0.84	0.34	0.44	0.54	0.63
		PI	3.17	3.17	3.17	3.17	3.17	3.17	3.17	3.17	3.17	3.17	3.17	3.17	3.17	3.17	3.17	3.17
	30	TC	9.77	9.86	9.95	10.03	10.41	10.41	10.41	10.52	10.72	10.72	10.72	10.72	11.53	11.53	11.53	11.53
		S/T	0.80	0.91	1.00	1.00	0.62	0.73	0.84	0.95	0.53	0.64	0.75	0.86	0.34	0.44	0.54	0.64
		PI	3.47	3.47	3.47	3.47	3.48	3.48	3.48	3.48	3.48	3.48	3.48	3.48	3.50	3.50	3.50	3.50
	35	TC	9.29	9.37	9.46	9.54	9.89	9.89	9.89	9.98	10.18	10.18	10.35	10.18	10.98	10.98	10.98	10.98
		S/T	0.81	0.93	1.00	1.00	0.62	0.74	0.86	0.97	0.54	0.65	0.76	0.88	0.34	0.44	0.55	0.65
		PI	3.79	3.79	3.79	3.79	3.81	3.81	3.81	3.81	3.81	3.81	3.82	3.81	3.81	3.81	3.81	3.81
	40	TC	8.75	8.84	8.93	9.01	9.33	9.33	9.37	9.46	9.60	9.60	9.70	9.64	10.38	10.38	10.38	10.38
		S/T	0.84	0.98	1.00	1.00	0.64	0.77	0.89	1.00	0.55	0.67	0.80	0.92	0.33	0.45	0.56	0.68
		PI	4.18	4.18	4.18	4.18	4.20	4.20	4.20	4.20	4.21	4.21	4.22	4.21	4.23	4.23	4.23	4.23
	46	TC	8.11	8.20	8.28	8.37	8.66	8.66	8.74	8.83	8.91	8.91	8.91	9.00	9.66	9.66	9.66	9.66
		S/T	0.86	1.00	1.00	1.00	0.65	0.78	0.91	1.00	0.55	0.68	0.81	0.94	0.33	0.45	0.57	0.69
		PI	4.65	4.65	4.65	4.65	4.67	4.67	4.67	4.67	4.69	4.69	4.69	4.69	4.73	4.73	4.73	4.73
	50	TC	7.59	7.68	7.76	7.85	8.14	8.14	8.22	8.31	8.40	8.40	8.40	8.48	9.12	9.12	9.12	9.12
		S/T	0.89	1.00	1.00	1.00	0.66	0.80	0.94	1.00	0.56	0.70	0.84	0.97	0.33	0.45	0.58	0.91
		PI	5.04	5.04	5.04	5.04	5.06	5.06	5.06	5.06	5.07	5.07	5.07	5.07	5.11	5.11	5.11	5.11

1955	-15	TC	11.49	11.61	11.73	11.85	12.08	12.08	12.08	12.20	12.38	12.38	12.38	12.38	13.15	13.15	13.15	13.15
		S/T	0.77	0.88	1.00	1.00	0.60	0.70	0.81	0.98	0.51	0.62	0.72	0.83	0.33	0.42	0.52	0.63
		PI	2.71	2.71	2.71	2.71	2.69	2.69	2.69	2.69	2.70	2.70	2.70	2.70	2.69	2.69	2.69	2.69
	-10	TC	11.42	11.54	11.66	11.78	12.01	12.01	12.01	12.13	12.32	12.32	12.32	12.32	13.11	13.11	13.11	13.11
		S/T	0.78	0.88	1.00	1.00	0.60	0.71	0.82	0.98	0.51	0.62	0.73	0.83	0.33	0.43	0.52	0.63
		PI	2.70	2.70	2.70	2.70	2.69	2.69	2.69	2.69	2.69	2.69	2.69	2.69	2.69	2.69	2.69	2.69
	-5	TC	11.35	11.47	11.59	11.71	11.97	11.97	11.97	12.08	12.28	12.28	12.28	12.28	13.07	13.07	13.07	13.07
		S/T	0.78	0.89	1.00	1.00	0.60	0.71	0.82	0.99	0.52	0.62	0.73	0.84	0.33	0.43	0.53	0.63
		PI	2.69	2.69	2.69	2.69	2.68	2.68	2.68	2.68	2.69	2.69	2.69	2.69	2.69	2.69	2.69	2.69
	0	TC	11.29	11.41	11.53	11.65	11.92	11.92	11.92	12.04	12.24	12.24	12.24	12.24	13.06	13.06	13.06	13.06
		S/T	0.78	0.89	1.00	1.00	0.61	0.72	0.82	0.99	0.52	0.63	0.74	0.84	0.33	0.43	0.53	0.64
		PI	2.70	2.70	2.70	2.70	2.69	2.69	2.69	2.69	2.70	2.70	2.70	2.70	2.70	2.70	2.70	2.70
	5	TC	11.24	11.36	11.47	11.59	11.87	11.87	11.87	11.99	12.20	12.20	12.20	12.20	13.05	13.05	13.05	13.05
		S/T	0.79	0.90	1.00	1.00	0.61	0.72	0.83	1.00	0.52	0.63	0.74	0.85	0.33	0.43	0.53	0.64
		PI	2.73	2.73	2.73	2.73	2.72	2.72	2.72	2.72	2.72	2.72	2.72	2.72	2.72	2.72	2.72	2.72
	10	TC	11.17	11.29	11.40	11.52	11.82	11.82	11.82	11.94	12.15	12.15	12.15	12.15	13.02	13.02	13.02	13.02
		S/T	0.79	0.90	1.00	1.00	0.61	0.72	0.83	1.00	0.52	0.63	0.74	0.85	0.34	0.44	0.53	0.64
		PI	2.77	2.77	2.77	2.77	2.76	2.76	2.76	2.76	2.76	2.76	2.76	2.76	2.76	2.76	2.76	2.76
	15	TC	11.08	11.19	11.31	11.43	11.74	11.74	11.74	11.86	12.08	12.08	12.08	12.08	12.96	12.96	12.96	12.96
		S/T	0.80	0.91	1.00	1.00	0.62	0.73	0.84	0.95	0.53	0.64	0.75	0.86	0.34	0.44	0.54	0.65
		PI	2.84	2.84	2.84	2.84	2.82	2.82	2.82	2.82	2.83	2.83	2.83	2.83	2.82	2.82	2.82	2.82
	20	TC	10.95	11.07	11.18	11.30	11.61	11.61	11.61	11.73	11.96	11.96	11.96	11.96	12.85	12.85	12.85	12.85
		S/T	0.80	0.91	1.00	1.00	0.62	0.73	0.84	0.95	0.53	0.64	0.75	0.86	0.34	0.44	0.54	0.65
		PI	2.94	2.94	2.94	2.94	2.92	2.92	2.92	2.92	2.92	2.92	2.92	2.92	2.90	2.90	2.90	2.90
	25	TC	10.46	10.58	10.69	10.81	11.10	11.10	11.10	11.21	11.44	11.44	11.44	11.44	12.30	12.30	12.30	12.30
		S/T	0.81	0.93	1.00	1.00	0.63	0.74	0.86	0.98	0.54	0.65	0.77	0.88	0.34	0.44	0.55	0.66
		PI	3.23	3.23	3.23	3.23	3.23	3.23	3.23	3.23	3.23	3.23	3.23	3.23	3.23	3.23	3.23	3.23
	30	TC	9.98	10.06	10.18	10.29	10.61	10.61	10.61	10.72	10.92	10.92	10.92	11.04	11.76	11.76	11.76	11.76
		S/T	0.83	0.96	1.00	1.00	0.63	0.76	0.88	1.00	0.54	0.66	0.78	0.90	0.33	0.45	0.56	0.67
		PI	3.54	3.54	3.54	3.54	3.55	3.55	3.55	3.55	3.56	3.56	3.56	3.56	3.57	3.57	3.57	3.57
	35	TC	9.46	9.54	9.63	9.72	10.06	10.06	10.18	10.29	10.38	10.38	**10.55**	10.67	11.21	11.21	11.21	11.21
		S/T	0.85	0.98	1.00	1.00	0.64	0.77	0.90	1.00	0.55	0.67	**0.80**	0.91	0.33	0.45	0.57	0.68
		PI	3.87	3.87	3.87	3.87	3.89	3.89	3.89	3.89	3.89	3.89	**3.90**	3.89	3.92	3.92	3.92	3.92
	40	TC	8.91	9.00	9.08	9.17	9.49	9.49	9.59	9.69	9.79	9.79	9.89	9.99	10.60	10.60	10.60	10.60
		S/T	0.89	1.00	1.00	1.00	0.66	0.81	0.94	1.00	0.56	0.70	0.84	0.97	0.33	0.45	0.58	0.90
		PI	4.27	4.27	4.27	4.27	4.29	4.29	4.29	4.29	4.30	4.30	4.30	4.30	4.33	4.33	4.33	4.33
	46	TC	8.25	8.34	8.43	8.51	8.80	8.80	8.89	8.97	9.09	9.09	9.09	9.17	9.86	9.86	9.86	9.86
		S/T	0.90	1.00	1.00	1.00	0.67	0.82	0.97	1.00	0.57	0.71	0.85	0.99	0.32	0.46	0.59	0.92
		PI	4.75	4.75	4.75	4.75	4.77	4.77	4.77	4.77	4.79	4.79	4.79	4.79	4.83	4.83	4.83	4.83
	50	TC	7.74	7.82	7.91	7.99	8.28	8.28	8.37	8.45	8.57	8.57	8.57	8.66	9.29	9.29	9.29	9.29
		S/T	0.93	1.00	1.00	1.00	0.69	0.85	1.00	1.00	0.57	0.73	0.88	1.00	0.32	0.46	0.60	0.97
		PI	5.14	5.14	5.14	5.14	5.17	5.17	5.17	5.17	5.18	5.18	5.18	5.18	5.22	5.22	5.22	5.22

TC:Total Cooling Capacity (kW)

S/T:Sensible Cooling Capacity Ratio

PI:Power Input(kW)

Note: The table shows the case where the operation frequency of a compressor is fixed.

36k+YDAX-100H-09T35																		
INDOOR AIRFLOW (CMH)	OUTDOOR DB(℃)	ID WB (℃)	16.0				18.0				19.0				22.0			
		ID DB (℃)	23.0	25.0	27.0	29.0	23.0	25.0	27.0	29.0	23.0	25.0	27.0	29.0	23.0	25.0	27.0	29.0
1504	-15	TC	11.05	11.06	11.18	11.30	11.63	11.87	11.87	11.99	11.90	11.90	11.90	11.90	12.65	12.65	12.65	12.65
		S/T	0.71	0.81	0.90	0.97	0.57	0.66	0.74	0.83	0.50	0.59	0.67	0.75	0.35	0.42	0.50	0.58
		PI	2.66	2.66	2.66	2.66	2.66	2.66	2.66	2.66	2.65	2.65	2.65	2.65	2.65	2.65	2.65	2.65
	-10	TC	10.99	11.00	11.11	11.23	11.56	11.80	11.80	11.92	11.84	11.84	11.84	11.84	12.60	12.60	12.60	12.60
		S/T	0.72	0.82	0.90	0.97	0.57	0.66	0.75	0.83	0.50	0.59	0.67	0.76	0.35	0.43	0.50	0.58
		PI	2.65	2.65	2.65	2.65	2.65	2.65	2.65	2.65	2.65	2.65	2.65	2.65	2.65	2.65	2.65	2.65
	-5	TC	10.92	10.93	11.05	11.17	11.52	11.76	11.76	11.88	11.80	11.80	11.80	11.80	12.57	12.57	12.57	12.57
		S/T	0.72	0.82	0.91	0.98	0.58	0.66	0.75	0.84	0.51	0.59	0.67	0.76	0.35	0.43	0.51	0.59
		PI	2.65	2.65	2.65	2.65	2.65	2.65	2.65	2.65	2.65	2.65	2.65	2.65	2.66	2.66	2.66	2.66
	0	TC	10.87	10.87	10.99	11.11	11.47	11.71	11.71	11.83	11.77	11.77	11.77	11.77	12.56	12.56	12.56	12.56
		S/T	0.73	0.82	0.91	0.98	0.58	0.67	0.75	0.84	0.51	0.60	0.68	0.76	0.35	0.43	0.51	0.59
		PI	2.66	2.66	2.66	2.66	2.66	2.66	2.66	2.66	2.66	2.66	2.66	2.66	2.67	2.67	2.67	2.67
	5	TC	10.81	10.82	10.94	11.06	11.43	11.67	11.67	11.79	11.73	11.73	11.73	11.73	12.55	12.55	12.55	12.55
		S/T	0.73	0.83	0.92	0.99	0.58	0.67	0.76	0.85	0.51	0.60	0.68	0.77	0.35	0.43	0.51	0.59
		PI	2.68	2.68	2.68	2.68	2.68	2.68	2.68	2.68	2.68	2.68	2.68	2.68	2.69	2.69	2.69	2.69
	10	TC	10.75	10.75	10.87	10.99	11.38	11.61	11.61	11.73	11.68	11.68	11.68	11.68	12.52	12.52	12.52	12.52
		S/T	0.73	0.83	0.92	0.99	0.58	0.67	0.76	0.85	0.51	0.60	0.68	0.77	0.36	0.44	0.51	0.59
		PI	2.73	2.73	2.73	2.73	2.72	2.72	2.72	2.72	2.72	2.72	2.72	2.72	2.72	2.72	2.72	2.72
	15	TC	10.66	10.67	10.78	10.90	11.30	11.54	11.54	11.65	11.61	11.61	11.61	11.61	12.46	12.46	12.46	12.46
		S/T	0.74	0.84	0.93	1.00	0.59	0.68	0.77	0.86	0.52	0.61	0.69	0.78	0.36	0.44	0.52	0.60
		PI	2.79	2.79	2.79	2.79	2.79	2.79	2.79	2.79	2.78	2.78	2.78	2.78	2.78	2.78	2.78	2.78
	20	TC	10.54	10.55	10.66	10.78	11.18	11.18	11.18	11.18	11.50	11.50	11.50	11.50	12.36	12.36	12.36	12.36
		S/T	0.74	0.84	0.93	1.00	0.59	0.68	0.77	0.86	0.52	0.61	0.69	0.78	0.36	0.44	0.52	0.60
		PI	2.89	2.89	2.89	2.89	2.88	2.88	2.88	2.88	2.87	2.87	2.87	2.87	2.86	2.86	2.86	2.86
	25	TC	10.06	10.06	10.17	10.29	10.69	10.69	10.69	10.69	11.01	11.01	11.01	11.01	11.84	11.84	11.84	11.84
		S/T	0.75	0.85	0.95	1.00	0.59	0.69	0.78	0.88	0.52	0.61	0.70	0.80	0.35	0.44	0.52	0.61
		PI	3.19	3.19	3.19	3.19	3.19	3.19	3.19	3.19	3.19	3.19	3.19	3.19	3.19	3.19	3.19	3.19
	30	TC	9.57	9.57	9.66	9.74	10.20	10.20	10.20	10.32	10.49	10.49	10.49	10.49	11.32	11.32	11.32	11.32
		S/T	0.76	0.87	0.97	1.00	0.60	0.70	0.80	0.89	0.52	0.62	0.72	0.81	0.35	0.44	0.53	0.62
		PI	3.49	3.49	3.49	3.49	3.50	3.50	3.50	3.50	3.50	3.50	3.50	3.50	3.52	3.52	3.52	3.52
	35	TC	9.11	9.20	9.28	9.37	9.68	9.68	9.68	9.77	10.00	10.00	10.14	10.00	10.78	10.78	10.78	10.78
		S/T	0.78	0.88	0.99	1.00	0.61	0.71	0.81	0.91	0.53	0.63	0.72	0.83	0.35	0.44	0.53	0.63
		PI	3.81	3.81	3.81	3.81	3.83	3.83	3.83	3.83	3.83	3.83	3.84	3.83	3.86	3.86	3.86	3.86
	40	TC	8.58	8.66	8.75	8.84	9.14	9.14	9.14	9.23	9.43	9.43	9.51	9.47	10.18	10.18	10.18	10.18
		S/T	0.80	0.92	1.00	1.00	0.62	0.73	0.85	0.96	0.53	0.65	0.76	0.87	0.34	0.44	0.54	0.65
		PI	4.21	4.21	4.21	4.21	4.23	4.23	4.23	4.23	4.23	4.23	4.24	4.23	4.26	4.26	4.26	4.26
	46	TC	7.93	8.02	8.11	8.19	8.48	8.48	8.48	8.57	8.74	8.74	8.74	8.83	9.46	9.46	9.46	9.46
		S/T	0.82	0.94	1.00	1.00	0.63	0.75	0.86	0.98	0.54	0.65	0.77	0.88	0.34	0.44	0.55	0.66
		PI	4.68	4.68	4.68	4.68	4.70	4.70	4.70	4.70	4.71	4.71	4.71	4.71	4.75	4.75	4.75	4.75
	50	TC	7.45	7.53	7.62	7.70	7.96	7.96	8.05	8.14	8.22	8.22	8.22	8.31	8.91	8.91	8.91	8.91
		S/T	0.84	0.97	1.00	1.00	0.64	0.76	0.89	1.00	0.55	0.67	0.79	0.91	0.33	0.45	0.56	0.67
		PI	5.06	5.06	5.06	5.06	5.09	5.09	5.09	5.09	5.10	5.10	5.10	5.10	5.14	5.14	5.14	5.14
1728	-15	TC	11.28	11.28	11.40	11.52	11.87	11.87	11.87	11.99	12.15	12.15	12.15	12.15	12.92	12.92	12.92	12.92
		S/T	0.74	0.85	0.98	1.00	0.58	0.68	0.78	0.87	0.51	0.60	0.70	0.79	0.34	0.42	0.51	0.60
		PI	2.72	2.72	2.72	2.72	2.71	2.71	2.71	2.71	2.71	2.71	2.71	2.71	2.71	2.71	2.71	2.71
	-10	TC	11.21	11.21	11.33	11.45	11.80	11.80	11.80	11.92	12.08	12.08	12.08	12.08	12.87	12.87	12.87	12.87
		S/T	0.75	0.85	0.99	1.00	0.58	0.68	0.79	0.87	0.51	0.60	0.70	0.80	0.34	0.43	0.51	0.60
		PI	2.71	2.71	2.71	2.71	2.71	2.71	2.71	2.71	2.70	2.70	2.70	2.70	2.71	2.71	2.71	2.71
	-5	TC	11.14	11.14	11.26	11.38	11.76	11.76	11.76	11.88	12.04	12.04	12.04	12.04	12.84	12.84	12.84	12.84
		S/T	0.75	0.86	0.99	1.00	0.59	0.68	0.79	0.88	0.52	0.60	0.70	0.80	0.34	0.43	0.52	0.60
		PI	2.70	2.70	2.70	2.70	2.70	2.70	2.70	2.70	2.70	2.70	2.70	2.70	2.71	2.71	2.71	2.71
	0	TC	11.09	11.09	11.21	11.32	11.71	11.71	11.71	11.83	12.01	12.01	12.01	12.01	12.83	12.83	12.83	12.83
		S/T	0.75	0.86	1.00	1.00	0.59	0.69	0.79	0.88	0.52	0.61	0.71	0.80	0.34	0.43	0.52	0.61
		PI	2.71	2.71	2.71	2.71	2.71	2.71	2.71	2.71	2.71	2.71	2.71	2.71	2.72	2.72	2.72	2.72
	5	TC	11.03	11.03	11.15	11.27	11.67	11.67	11.67	11.79	11.97	11.97	11.97	11.97	12.82	12.82	12.82	12.82
		S/T	0.76	0.87	1.00	1.00	0.59	0.69	0.80	0.89	0.52	0.61	0.71	0.81	0.34	0.43	0.52	0.61
		PI	2.74	2.74	2.74	2.74	2.74	2.74	2.74	2.74	2.73	2.73	2.73	2.73	2.74	2.74	2.74	2.74
	10	TC	10.96	10.96	11.08	11.20	11.61	11.61	11.61	11.73	11.92	11.92	11.92	11.92	12.78	12.78	12.78	12.78
		S/T	0.76	0.87	1.00	1.00	0.59	0.69	0.80	0.89	0.52	0.61	0.71	0.81	0.35	0.44	0.52	0.61
		PI	2.78	2.78	2.78	2.78	2.78	2.78	2.78	2.78	2.77	2.77	2.77	2.77	2.78	2.78	2.78	2.78
	15	TC	10.87	10.87	10.99	11.11	11.54	11.54	11.54	11.65	11.85	11.85	11.85	11.85	12.73	12.73	12.73	12.73
		S/T	0.77	0.88	0.98	1.00	0.60	0.70	0.81	0.90	0.53	0.62	0.72	0.82	0.35	0.44	0.53	0.62
		PI	2.85	2.85	2.85	2.85	2.84	2.84	2.84	2.84	2.84	2.84	2.84	2.84	2.84	2.84	2.84	2.84
	20	TC	10.75	10.75	10.87	10.98	11.41	11.41	11.41	11.53	11.73	11.73	11.73	11.73	12.62	12.62	12.62	12.62
		S/T	0.77	0.88	0.98	1.00	0.60	0.70	0.81	0.90	0.53	0.62	0.72	0.82	0.35	0.44	0.53	0.62
		PI	2.95	2.95	2.95	2.95	2.94	2.94	2.94	2.94	2.93	2.93	2.93	2.93	2.92	2.92	2.92	2.92
	25	TC	10.26	10.38	10.49	10.61	10.90	10.90	10.90	11.01	11.21	11.21	11.21	11.21	12.07	12.07	12.07	12.07
		S/T	0.78	0.89	1.00	1.00	0.61	0.72	0.82	0.92	0.53	0.63	0.74	0.84	0.34	0.44	0.54	0.63
		PI	3.25	3.25	3.25	3.25	3.25	3.25	3.25	3.25	3.25	3.25	3.25	3.25	3.25	3.25	3.25	3.25
	30	TC	9.77	9.86	9.95	10.03	10.41	10.41	10.41	10.52	10.72	10.72	10.72	10.72	11.53	11.53	11.53	11.53
		S/T	0.80	0.91	1.00	1.00	0.62	0.73	0.84	0.95	0.53	0.64	0.75	0.86	0.34	0.44	0.54	0.64
		PI	3.56	3.56	3.56	3.56	3.57	3.57	3.57	3.57	3.57	3.57	3.57	3.57	3.59	3.59	3.59	3.59
	35	TC	9.29	9.37	9.46	9.54	9.89	9.89	9.89	9.98	10.18	10.18	10.35	10.18	10.98	10.98	10.98	10.98
		S/T	0.81	0.93	1.00	1.00	0.62	0.74	0.86	0.97	0.54	0.65	0.76	0.88	0.34	0.44	0.55	0.65
		PI	3.89	3.89	3.89	3.89	3.91	3.91	3.91	3.91	3.91	3.91	3.92	3.91	3.91	3.91	3.91	3.91
	40	TC	8.75	8.84	8.93	9.01	9.33	9.33	9.37	9.46	9.60	9.60	9.70	9.64	10.38	10.38	10.38	10.38
		S/T	0.84	0.98	1.00	1.00	0.64	0.77	0.89	1.00	0.55	0.67	0.80	0.92	0.33	0.45	0.56	0.68
		PI	4.29	4.29	4.29	4.29	4.32	4.32	4.32	4.32	4.32	4.32	4.33	4.32	4.34	4.34	4.34	4.34
	46	TC	8.11	8.20	8.28	8.37	8.66	8.66	8.74	8.83	8.91	8.91	8.91	9.00	9.66	9.66	9.66	9.66
		S/T	0.86	1.00	1.00	1.00	0.65	0.78	0.91	1.00	0.55	0.68	0.81	0.94	0.33	0.45	0.57	0.69
		PI	4.77	4.77	4.77	4.77	4.80	4.80	4.80	4.80	4.81	4.81	4.81	4.81	4.85	4.85	4.85	4.85
	50	TC	7.59	7.68	7.76	7.85	8.14	8.14	8.22	8.31	8.40	8.40	8.40	8.48	9.12	9.12	9.12	9.12
		S/T	0.89	1.00	1.00	1.00	0.66	0.80	0.94	1.00	0.56	0.70	0.84	0.97	0.33	0.45	0.58	0.91
		PI	5.17	5.17	5.17	5.17	5.19	5.19	5.19	5.19	5.21	5.21	5.21	5.21	5.25	5.25	5.25	5.25

1955	-15	TC	11.49	11.61	11.73	11.85	12.08	12.08	12.08	12.20	12.38	12.38	12.38	12.38	13.15	13.15	13.15	13.15
		S/T	0.77	0.88	1.00	1.00	0.60	0.70	0.81	0.98	0.51	0.62	0.72	0.83	0.33	0.42	0.52	0.63
		PI	2.77	2.77	2.77	2.77	2.77	2.77	2.77	2.77	2.76	2.76	2.76	2.76	2.76	2.76	2.76	2.76
	-10	TC	11.42	11.54	11.66	11.78	12.01	12.01	12.01	12.13	12.32	12.32	12.32	12.32	13.11	13.11	13.11	13.11
		S/T	0.78	0.88	1.00	1.00	0.60	0.71	0.82	0.98	0.51	0.62	0.73	0.83	0.33	0.43	0.52	0.63
		PI	2.76	2.76	2.76	2.76	2.76	2.76	2.76	2.76	2.76	2.76	2.76	2.76	2.76	2.76	2.76	2.76
	-5	TC	11.35	11.47	11.59	11.71	11.97	11.97	11.97	12.08	12.28	12.28	12.28	12.28	13.07	13.07	13.07	13.07
		S/T	0.78	0.89	1.00	1.00	0.60	0.71	0.82	0.99	0.52	0.62	0.73	0.84	0.33	0.43	0.53	0.63
		PI	2.76	2.76	2.76	2.76	2.76	2.76	2.76	2.76	2.76	2.76	2.76	2.76	2.77	2.77	2.77	2.77
	0	TC	11.29	11.41	11.53	11.65	11.92	11.92	11.92	12.04	12.24	12.24	12.24	12.24	13.06	13.06	13.06	13.06
		S/T	0.78	0.89	1.00	1.00	0.61	0.72	0.82	0.99	0.52	0.63	0.74	0.84	0.33	0.43	0.53	0.64
		PI	2.77	2.77	2.77	2.77	2.77	2.77	2.77	2.77	2.77	2.77	2.77	2.77	2.78	2.78	2.78	2.78
	5	TC	11.24	11.36	11.47	11.59	11.87	11.87	11.87	11.99	12.20	12.20	12.20	12.20	13.05	13.05	13.05	13.05
		S/T	0.79	0.90	1.00	1.00	0.61	0.72	0.83	1.00	0.52	0.63	0.74	0.85	0.33	0.43	0.53	0.64
		PI	2.79	2.79	2.79	2.79	2.79	2.79	2.79	2.79	2.79	2.79	2.79	2.79	2.80	2.80	2.80	2.80
	10	TC	11.17	11.29	11.40	11.52	11.82	11.82	11.82	11.94	12.15	12.15	12.15	12.15	13.02	13.02	13.02	13.02
		S/T	0.79	0.90	1.00	1.00	0.61	0.72	0.83	1.00	0.52	0.63	0.74	0.85	0.34	0.44	0.53	0.64
		PI	2.84	2.84	2.84	2.84	2.83	2.83	2.83	2.83	2.83	2.83	2.83	2.83	2.83	2.83	2.83	2.83
	15	TC	11.08	11.19	11.31	11.43	11.74	11.74	11.74	11.86	12.08	12.08	12.08	12.08	12.96	12.96	12.96	12.96
		S/T	0.80	0.91	1.00	1.00	0.62	0.73	0.84	0.95	0.53	0.64	0.75	0.86	0.34	0.44	0.54	0.65
		PI	2.91	2.91	2.91	2.91	2.90	2.90	2.90	2.90	2.89	2.89	2.89	2.89	2.89	2.89	2.89	2.89
	20	TC	10.95	11.07	11.18	11.30	11.61	11.61	11.61	11.73	11.96	11.96	11.96	11.96	12.85	12.85	12.85	12.85
		S/T	0.80	0.91	1.00	1.00	0.62	0.73	0.84	0.95	0.53	0.64	0.75	0.86	0.34	0.44	0.54	0.65
		PI	3.01	3.01	3.01	3.01	3.00	3.00	3.00	3.00	2.99	2.99	2.99	2.99	2.98	2.98	2.98	2.98
	25	TC	10.46	10.58	10.69	10.81	11.10	11.10	11.10	11.21	11.44	11.44	11.44	11.44	12.30	12.30	12.30	12.30
		S/T	0.81	0.93	1.00	1.00	0.63	0.74	0.86	0.98	0.54	0.65	0.77	0.88	0.34	0.44	0.55	0.66
		PI	3.31	3.31	3.31	3.31	3.31	3.31	3.31	3.31	3.31	3.31	3.31	3.31	3.31	3.31	3.31	3.31
	30	TC	9.98	10.06	10.18	10.29	10.61	10.61	10.61	10.72	10.92	10.92	10.92	11.04	11.76	11.76	11.76	11.76
		S/T	0.83	0.96	1.00	1.00	0.63	0.76	0.88	1.00	0.54	0.66	0.78	0.90	0.33	0.45	0.56	0.67
		PI	3.63	3.63	3.63	3.63	3.64	3.64	3.64	3.64	3.65	3.65	3.65	3.65	3.66	3.66	3.66	3.66
	35	TC	9.46	9.54	9.63	9.72	10.06	10.06	10.18	10.29	10.38	10.38	**10.55**	10.67	11.21	11.21	11.21	11.21
		S/T	0.85	0.98	1.00	1.00	0.64	0.77	0.90	1.00	0.55	0.67	**0.80**	0.91	0.33	0.45	0.57	0.68
		PI	3.97	3.97	3.97	3.97	3.99	3.99	3.99	3.99	3.99	3.99	**4.00**	3.99	4.02	4.02	4.02	4.02
	40	TC	8.91	9.00	9.08	9.17	9.49	9.49	9.59	9.69	9.79	9.79	9.89	9.99	10.60	10.60	10.60	10.60
		S/T	0.89	1.00	1.00	1.00	0.66	0.81	0.94	1.00	0.56	0.70	0.84	0.97	0.33	0.45	0.58	0.90
		PI	4.38	4.38	4.38	4.38	4.40	4.40	4.40	4.40	4.41	4.41	4.41	4.41	4.44	4.44	4.44	4.44
	46	TC	8.25	8.34	8.43	8.51	8.80	8.80	8.89	8.97	9.09	9.09	9.09	9.17	9.86	9.86	9.86	9.86
		S/T	0.90	1.00	1.00	1.00	0.67	0.82	0.97	1.00	0.57	0.71	0.85	0.99	0.32	0.46	0.59	0.92
		PI	4.87	4.87	4.87	4.87	4.89	4.89	4.89	4.89	4.91	4.91	4.91	4.91	4.95	4.95	4.95	4.95
	50	TC	7.74	7.82	7.91	7.99	8.28	8.28	8.37	8.45	8.57	8.57	8.57	8.66	9.29	9.29	9.29	9.29
		S/T	0.93	1.00	1.00	1.00	0.69	0.85	1.00	1.00	0.57	0.73	0.88	1.00	0.32	0.46	0.60	0.97
		PI	5.27	5.27	5.27	5.27	5.30	5.30	5.30	5.30	5.31	5.31	5.31	5.31	5.35	5.35	5.35	5.35

TC:Total Cooling Capacity (kW)

S/T:Sensible Cooling Capacity Ratio

PI:Power Input(kW)

Note: The table shows the case where the operation frequency of a compressor is fixed.

48k																		
INDOOR AIRFLOW (CMH)	OUTDOOR DB(℃)	ID WB (℃)	16.0				18.0				19.0				22.0			
		ID DB (℃)	23.0	25.0	27.0	29.0	23.0	25.0	27.0	29.0	23.0	25.0	27.0	29.0	23.0	25.0	27.0	29.0
1600	-15	TC	14.70	14.69	14.69	14.84	15.46	15.79	15.79	15.79	15.84	15.84	15.84	15.84	16.83	16.83	16.83	16.83
		S/T	0.68	0.75	0.82	0.90	0.55	0.62	0.70	0.76	0.49	0.56	0.63	0.70	0.36	0.42	0.48	0.55
		PI	3.33	3.33	3.33	3.33	3.32	3.32	3.32	3.32	3.32	3.32	3.32	3.32	3.31	3.31	3.31	3.31
	-10	TC	14.61	14.60	14.60	14.75	15.37	15.71	15.71	15.71	15.76	15.76	15.76	15.76	16.77	16.77	16.77	16.77
		S/T	0.68	0.76	0.82	0.90	0.55	0.62	0.70	0.77	0.49	0.56	0.63	0.70	0.36	0.43	0.49	0.55
		PI	3.31	3.32	3.32	3.31	3.31	3.31	3.31	3.31	3.31	3.31	3.31	3.31	3.32	3.32	3.32	3.32
	-5	TC	14.52	14.51	14.51	14.66	15.31	15.65	15.65	15.65	15.70	15.70	15.70	15.70	16.73	16.73	16.73	16.73
		S/T	0.68	0.76	0.83	0.91	0.56	0.63	0.70	0.77	0.50	0.57	0.63	0.70	0.36	0.43	0.49	0.56
		PI	3.31	3.31	3.31	3.31	3.31	3.31	3.31	3.31	3.31	3.31	3.31	3.31	3.32	3.32	3.32	3.32
	0	TC	14.45	14.44	14.44	14.59	15.26	15.59	15.59	15.59	15.66	15.66	15.66	15.66	16.71	16.71	16.71	16.71
		S/T	0.69	0.76	0.83	0.91	0.56	0.63	0.71	0.77	0.50	0.57	0.64	0.71	0.36	0.43	0.49	0.56
		PI	3.32	3.32	3.32	3.32	3.32	3.32	3.32	3.32	3.33	3.33	3.33	3.33	3.33	3.33	3.33	3.33
	5	TC	14.38	14.37	14.37	14.51	15.20	15.53	15.53	15.53	15.61	15.61	15.61	15.61	16.70	16.70	16.70	16.70
		S/T	0.69	0.77	0.84	0.92	0.56	0.63	0.71	0.78	0.50	0.57	0.64	0.71	0.36	0.43	0.49	0.56
		PI	3.35	3.35	3.35	3.35	3.35	3.35	3.35	3.35	3.35	3.35	3.35	3.35	3.36	3.36	3.36	3.36
	10	TC	14.29	14.28	14.28	14.43	15.13	15.45	15.45	15.45	15.54	15.54	15.54	15.54	16.66	16.66	16.66	16.66
		S/T	0.69	0.77	0.84	0.92	0.56	0.64	0.71	0.78	0.50	0.57	0.64	0.71	0.37	0.44	0.50	0.56
		PI	3.41	3.41	3.41	3.41	3.40	3.40	3.40	3.40	3.40	3.40	3.40	3.40	3.40	3.40	3.40	3.40
	15	TC	14.18	14.16	14.16	14.31	15.02	15.35	15.35	15.35	15.45	15.45	15.45	15.45	16.59	16.59	16.59	16.59
		S/T	0.70	0.78	0.85	0.93	0.57	0.64	0.72	0.79	0.51	0.58	0.65	0.72	0.37	0.44	0.50	0.57
		PI	3.49	3.49	3.49	3.49	3.48	3.48	3.48	3.48	3.48	3.48	3.48	3.48	3.47	3.47	3.47	3.47
	20	TC	14.02	14.00	14.00	14.15	14.87	14.87	14.87	14.87	15.30	15.30	15.30	15.30	16.44	16.44	16.44	16.44
		S/T	0.70	0.78	0.85	0.93	0.57	0.64	0.72	0.79	0.51	0.58	0.65	0.72	0.37	0.44	0.50	0.57
		PI	3.61	3.62	3.62	3.61	3.60	3.60	3.60	3.60	3.60	3.60	3.60	3.60	3.58	3.58	3.58	3.58
	25	TC	13.37	13.37	13.37	13.52	14.21	14.21	14.21	14.21	14.64	14.64	14.64	14.64	15.73	15.73	15.73	15.73
		S/T	0.71	0.79	0.87	0.94	0.57	0.65	0.73	0.80	0.51	0.59	0.66	0.73	0.37	0.44	0.51	0.57
		PI	3.98	3.98	3.98	3.98	3.98	3.98	3.98	3.98	3.98	3.98	3.98	3.98	3.98	3.98	3.98	3.98
	30	TC	12.74	12.74	12.74	12.86	13.55	13.55	13.55	13.55	13.95	13.95	13.95	13.95	15.04	15.04	15.04	15.04
		S/T	0.72	0.80	0.88	0.96	0.58	0.66	0.74	0.81	0.51	0.59	0.67	0.74	0.37	0.44	0.51	0.58
		PI	4.36	4.36	4.36	4.36	4.37	4.37	4.37	4.37	4.37	4.37	4.37	4.37	4.39	4.39	4.39	4.39
	35	TC	12.11	12.11	12.23	12.34	12.89	12.89	12.89	12.89	13.29	13.29	13.49	13.29	14.32	14.32	14.32	14.32
		S/T	0.72	0.81	0.90	0.98	0.58	0.66	0.75	0.83	0.51	0.60	0.67	0.76	0.36	0.44	0.51	0.59
		PI	4.77	4.77	4.77	4.77	4.78	4.78	4.78	4.78	4.79	4.79	4.80	4.79	4.82	4.82	4.82	4.82
	40	TC	11.40	11.40	11.51	11.62	12.13	12.13	12.13	12.13	12.52	12.52	12.63	12.52	13.52	13.52	13.52	13.52
		S/T	0.74	0.84	0.94	1.00	0.59	0.68	0.77	0.86	0.52	0.61	0.70	0.78	0.35	0.44	0.52	0.60
		PI	5.26	5.26	5.26	5.26	5.27	5.27	5.27	5.27	5.28	5.28	5.29	5.28	5.32	5.32	5.32	5.32
	46	TC	10.55	10.55	10.67	10.78	11.24	11.24	11.24	11.24	11.61	11.61	11.61	11.61	12.59	12.59	12.59	12.59
		S/T	0.75	0.86	0.95	1.00	0.59	0.69	0.79	0.88	0.52	0.61	0.71	0.80	0.35	0.44	0.52	0.61
		PI	5.84	5.84	5.84	5.84	5.87	5.87	5.87	5.87	5.88	5.88	5.88	5.88	5.93	5.93	5.93	5.93
	50	TC	9.89	9.89	9.98	10.06	10.58	10.58	10.58	10.69	10.92	10.92	10.92	10.92	11.84	11.84	11.84	11.84
		S/T	0.77	0.88	0.98	1.00	0.60	0.70	0.80	0.90	0.52	0.62	0.72	0.82	0.35	0.44	0.53	0.62
		PI	6.33	6.33	6.33	6.33	6.35	6.35	6.35	6.35	6.37	6.37	6.37	6.37	6.42	6.42	6.42	6.42
1850	-15	TC	15.02	15.02	15.17	15.33	15.79	15.79	15.79	15.79	16.17	16.17	16.17	16.17	17.19	17.19	17.19	17.19
		S/T	0.70	0.78	0.98	1.00	0.56	0.64	0.71	0.79	0.49	0.57	0.65	0.72	0.35	0.42	0.49	0.56
		PI	3.40	3.40	3.40	3.40	3.39	3.39	3.39	3.39	3.39	3.39	3.39	3.39	3.38	3.38	3.38	3.38
	-10	TC	14.94	14.94	15.08	15.23	15.71	15.71	15.71	15.71	16.09	16.09	16.09	16.09	17.13	17.13	17.13	17.13
		S/T	0.70	0.79	0.99	1.00	0.56	0.64	0.72	0.80	0.49	0.57	0.65	0.73	0.35	0.43	0.49	0.56
		PI	3.38	3.38	3.38	3.38	3.38	3.38	3.38	3.38	3.38	3.38	3.38	3.38	3.38	3.38	3.38	3.38
	-5	TC	14.85	14.85	14.99	15.14	15.65	15.65	15.65	15.65	16.03	16.03	16.03	16.03	17.09	17.09	17.09	17.09
		S/T	0.70	0.79	0.99	1.00	0.57	0.64	0.72	0.80	0.50	0.58	0.65	0.73	0.35	0.43	0.50	0.57
		PI	3.38	3.38	3.38	3.38	3.38	3.38	3.38	3.38	3.38	3.38	3.38	3.38	3.39	3.39	3.39	3.39
	0	TC	14.77	14.77	14.92	15.07	15.59	15.59	15.59	15.59	15.99	15.99	15.99	15.99	17.07	17.07	17.07	17.07
		S/T	0.71	0.79	1.00	1.00	0.57	0.65	0.73	0.80	0.50	0.58	0.66	0.74	0.35	0.43	0.50	0.57
		PI	3.39	3.39	3.39	3.39	3.39	3.39	3.39	3.39	3.39	3.39	3.39	3.39	3.40	3.40	3.40	3.40
	5	TC	14.70	14.70	14.84	14.99	15.53	15.53	15.53	15.53	15.94	15.94	15.94	15.94	17.06	17.06	17.06	17.06
		S/T	0.71	0.80	1.00	1.00	0.57	0.65	0.73	0.81	0.50	0.58	0.66	0.74	0.35	0.43	0.50	0.57
		PI	3.42	3.42	3.42	3.42	3.42	3.42	3.42	3.42	3.42	3.42	3.42	3.42	3.42	3.42	3.42	3.42
	10	TC	14.61	14.61	14.75	14.90	15.45	15.45	15.45	15.45	15.87	15.87	15.87	15.87	17.01	17.01	17.01	17.01
		S/T	0.71	0.80	1.00	1.00	0.57	0.65	0.73	0.81	0.50	0.58	0.66	0.74	0.36	0.44	0.50	0.57
		PI	3.48	3.48	3.48	3.48	3.47	3.47	3.47	3.47	3.47	3.47	3.47	3.47	3.47	3.47	3.47	3.47
	15	TC	14.49	14.49	14.63	14.78	15.35	15.35	15.35	15.35	15.77	15.77	15.77	15.77	16.94	16.94	16.94	16.94
		S/T	0.72	0.81	0.89	0.97	0.58	0.66	0.74	0.82	0.51	0.59	0.67	0.75	0.36	0.44	0.51	0.58
		PI	3.56	3.56	3.56	3.56	3.56	3.56	3.56	3.56	3.55	3.55	3.55	3.55	3.54	3.54	3.54	3.54
	20	TC	14.33	14.33	14.47	14.61	15.19	15.19	15.19	15.19	15.62	15.62	15.62	15.62	16.80	16.80	16.80	16.80
		S/T	0.72	0.81	0.89	0.97	0.58	0.66	0.74	0.82	0.51	0.59	0.67	0.75	0.36	0.44	0.51	0.58
		PI	3.69	3.69	3.69	3.69	3.68	3.68	3.68	3.68	3.67	3.67	3.67	3.67	3.65	3.65	3.65	3.65
	25	TC	13.67	13.67	13.81	13.95	14.50	14.50	14.50	14.50	14.93	14.93	14.93	14.93	16.08	16.08	16.08	16.08
		S/T	0.73	0.82	0.91	0.99	0.58	0.67	0.75	0.84	0.52	0.60	0.68	0.76	0.36	0.44	0.51	0.59
		PI	4.07	4.07	4.07	4.07	4.06	4.06	4.06	4.06	4.06	4.06	4.06	4.06	4.07	4.07	4.07	4.07
	30	TC	13.01	13.01	13.15	13.29	13.84	13.84	13.84	13.84	14.27	14.27	14.27	14.27	15.36	15.36	15.36	15.36
		S/T	0.74	0.83	0.93	1.00	0.59	0.68	0.77	0.86	0.52	0.60	0.69	0.78	0.36	0.44	0.52	0.60
		PI	4.45	4.45	4.45	4.45	4.46	4.46	4.46	4.46	4.47	4.47	4.47	4.47	4.48	4.48	4.48	4.48
	35	TC	12.37	12.37	12.49	12.60	13.15	13.15	13.15	13.15	13.58	13.58	13.78	13.58	14.64	14.64	14.64	14.64
		S/T	0.75	0.85	0.95	1.00	0.59	0.69	0.78	0.88	0.52	0.61	0.70	0.79	0.35	0.44	0.52	0.61
		PI	4.86	4.86	4.86	4.86	4.88	4.88	4.88	4.88	4.89	4.89	4.90	4.89	4.89	4.89	4.89	4.89
	40	TC	11.55	11.60	11.72	11.83	12.31	12.31	12.31	12.36	12.71	12.71	12.82	12.71	13.72	13.72	13.72	13.72
		S/T	0.77	0.88	0.99	1.00	0.60	0.71	0.81	0.91	0.53	0.63	0.73	0.83	0.35	0.44	0.53	0.62
		PI	5.37	5.37	5.37	5.37	5.39	5.39	5.39	5.39	5.41	5.41	5.41	5.41	5.43	5.43	5.43	5.43
	46	TC	10.68	10.79	10.91	11.02	11.42	11.42	11.42	11.54	11.79	11.79	11.79	11.79	12.76	12.76	12.76	12.76
		S/T	0.79	0.90	1.00	1.00	0.61	0.72	0.83	0.93	0.53	0.63	0.74	0.84	0.34	0.44	0.54	0.63
		PI	5.97	5.97	5.97	5.97	6.00	6.00	6.00	6.00	6.02	6.02	6.02	6.02	6.07	6.07	6.07	6.07
	50	TC	10.03	10.14	10.25	10.37	10.74	10.74	10.74	10.85	11.08	11.08	11.08	11.08	12.02	12.02	12.02	12.02
		S/T	0.81	0.92	1.00	1.00	0.62	0.73	0.85	0.96	0.53	0.65	0.76	0.87	0.34	0.44	0.54	0.91
		PI	6.47	6.47	6.47	6.47	6.50	6.50	6.50	6.50	6.51	6.51	6.51	6.51	6.57	6.57	6.57	6.57

2100	-15	TC	15.33	15.33	15.48	15.63	16.12	16.12	16.12	16.12	16.53	16.53	16.53	16.53	17.54	17.54	17.54	17.54
		S/T	0.71	0.81	1.00	1.00	0.57	0.66	0.74	0.98	0.50	0.59	0.67	0.75	0.34	0.42	0.50	0.58
		PI	3.47	3.47	3.47	3.47	3.45	3.45	3.45	3.45	3.45	3.45	3.45	3.45	3.45	3.45	3.45	3.45
	-10	TC	15.23	15.23	15.38	15.53	16.03	16.03	16.03	16.03	16.45	16.45	16.45	16.45	17.48	17.48	17.48	17.48
		S/T	0.72	0.82	1.00	1.00	0.57	0.66	0.75	0.98	0.50	0.59	0.67	0.76	0.34	0.43	0.50	0.58
		PI	3.45	3.45	3.45	3.45	3.45	3.45	3.45	3.45	3.44	3.44	3.44	3.44	3.45	3.45	3.45	3.45
	-5	TC	15.14	15.14	15.29	15.44	15.97	15.97	15.97	15.97	16.38	16.38	16.38	16.38	17.44	17.44	17.44	17.44
		S/T	0.72	0.82	1.00	1.00	0.58	0.66	0.75	0.99	0.51	0.59	0.67	0.76	0.34	0.43	0.51	0.59
		PI	3.45	3.45	3.45	3.45	3.44	3.44	3.44	3.44	3.44	3.44	3.44	3.44	3.46	3.46	3.46	3.46
	0	TC	15.07	15.07	15.22	15.36	15.91	15.91	15.91	15.91	16.34	16.34	16.34	16.34	17.42	17.42	17.42	17.42
		S/T	0.73	0.82	1.00	1.00	0.58	0.67	0.75	0.99	0.51	0.60	0.68	0.76	0.34	0.43	0.51	0.59
		PI	3.46	3.46	3.46	3.46	3.45	3.45	3.45	3.45	3.46	3.46	3.46	3.46	3.47	3.47	3.47	3.47
	5	TC	14.99	14.99	15.14	15.29	15.85	15.85	15.85	15.85	16.29	16.29	16.29	16.29	17.41	17.41	17.41	17.41
		S/T	0.73	0.83	1.00	1.00	0.58	0.67	0.76	1.00	0.51	0.60	0.68	0.77	0.34	0.43	0.51	0.59
		PI	3.49	3.49	3.49	3.49	3.49	3.49	3.49	3.49	3.48	3.48	3.48	3.48	3.50	3.50	3.50	3.50
	10	TC	14.90	14.90	15.05	15.19	15.78	15.78	15.78	15.78	16.22	16.22	16.22	16.22	17.36	17.36	17.36	17.36
		S/T	0.73	0.83	1.00	1.00	0.58	0.67	0.76	1.00	0.51	0.60	0.68	0.77	0.35	0.44	0.51	0.59
		PI	3.55	3.55	3.55	3.55	3.54	3.54	3.54	3.54	3.54	3.54	3.54	3.54	3.54	3.54	3.54	3.54
	15	TC	14.78	14.78	14.93	15.07	15.67	15.67	15.67	15.67	16.12	16.12	16.12	16.12	17.29	17.29	17.29	17.29
		S/T	0.74	0.84	0.93	1.00	0.59	0.68	0.77	0.86	0.52	0.61	0.69	0.78	0.35	0.44	0.52	0.60
		PI	3.64	3.64	3.64	3.64	3.62	3.62	3.62	3.62	3.62	3.62	3.62	3.62	3.62	3.62	3.62	3.62
	20	TC	14.61	14.61	14.76	14.90	15.50	15.50	15.50	15.50	15.96	15.96	15.96	15.96	17.14	17.14	17.14	17.14
		S/T	0.74	0.84	0.93	1.00	0.59	0.68	0.77	0.86	0.52	0.61	0.69	0.78	0.35	0.44	0.52	0.60
		PI	3.76	3.76	3.76	3.76	3.75	3.75	3.75	3.75	3.74	3.74	3.74	3.74	3.73	3.73	3.73	3.73
	25	TC	13.95	13.95	14.10	14.24	14.81	14.81	14.81	14.81	15.25	15.25	15.25	15.25	16.42	16.42	16.42	16.42
		S/T	0.75	0.85	0.95	1.00	0.59	0.69	0.78	0.88	0.52	0.61	0.71	0.80	0.35	0.44	0.52	0.61
		PI	4.15	4.15	4.15	4.15	4.15	4.15	4.15	4.15	4.15	4.15	4.15	4.15	4.15	4.15	4.15	4.15
	30	TC	13.29	13.29	13.44	13.58	14.13	14.13	14.13	14.27	14.56	14.56	14.56	14.56	15.68	15.68	15.68	15.68
		S/T	0.76	0.87	0.97	1.00	0.60	0.70	0.80	0.89	0.52	0.62	0.72	0.81	0.35	0.44	0.53	0.62
		PI	4.54	4.54	4.54	4.54	4.55	4.55	4.55	4.55	4.56	4.56	4.56	4.56	4.58	4.58	4.58	4.58
	35	TC	12.63	12.75	12.86	12.98	13.44	13.44	13.44	13.58	13.87	13.87	**14.07**	13.87	14.96	14.96	14.96	14.96
		S/T	0.78	0.89	0.99	1.00	0.61	0.71	0.82	0.92	0.53	0.63	**0.73**	0.83	0.35	0.44	0.53	0.63
		PI	4.96	4.96	4.96	4.96	4.98	4.98	4.98	4.98	4.99	4.99	**5.00**	4.99	5.03	5.03	5.03	5.03
	40	TC	11.79	11.91	12.02	12.14	12.57	12.57	12.57	12.70	12.97	12.97	13.08	13.02	14.01	14.01	14.01	14.01
		S/T	0.81	0.92	1.00	1.00	0.62	0.74	0.85	0.96	0.53	0.65	0.76	0.87	0.34	0.44	0.55	0.90
		PI	5.48	5.48	5.48	5.48	5.50	5.50	5.50	5.50	5.51	5.51	5.52	5.51	5.56	5.56	5.56	5.56
	46	TC	10.91	11.02	11.14	11.25	11.65	11.65	11.65	11.76	12.02	12.02	12.02	12.13	13.02	13.02	13.02	13.02
		S/T	0.82	0.94	1.00	1.00	0.63	0.75	0.87	0.98	0.54	0.66	0.77	0.88	0.34	0.44	0.55	0.92
		PI	6.10	6.10	6.10	6.10	6.12	6.12	6.12	6.12	6.14	6.14	6.14	6.14	6.19	6.19	6.19	6.19
	50	TC	10.25	10.37	10.48	10.60	10.97	10.97	11.08	11.19	11.31	11.31	11.31	11.42	12.28	12.28	12.28	12.28
		S/T	0.84	0.97	1.00	1.00	0.64	0.77	0.89	1.00	0.55	0.67	0.79	0.91	0.33	0.45	0.56	0.97
		PI	6.60	6.60	6.60	6.60	6.63	6.63	6.63	6.63	6.65	6.65	6.65	6.65	6.70	6.70	6.70	6.70

TC:Total Cooling Capacity (kW)

S/T:Sensible Cooling Capacity Ratio

PI:Power Input(kW)

Note: The table shows the case where the operation frequency of a compressor is fixed.

55k																		
INDOOR AIRFLOW (CMH)	OUTDOOR DB(℃)	ID WB (℃)	16.0				18.0				19.0				22.0			
		ID DB (℃)	23.0	25.0	27.0	29.0	23.0	25.0	27.0	29.0	23.0	25.0	27.0	29.0	23.0	25.0	27.0	29.0
1650	-15	TC	16.55	16.56	16.56	16.74	17.41	17.77	17.77	17.77	17.84	17.84	17.84	17.84	18.95	18.95	18.95	18.95
		S/T	0.67	0.73	0.80	0.87	0.55	0.61	0.68	0.74	0.49	0.56	0.62	0.68	0.37	0.42	0.48	0.54
		PI	3.77	3.77	3.77	3.77	3.75	3.75	3.75	3.75	3.75	3.75	3.75	3.75	3.75	3.75	3.75	3.75
	-10	TC	16.45	16.46	16.46	16.64	17.31	17.67	17.67	17.67	17.75	17.75	17.75	17.75	18.89	18.89	18.89	18.89
		S/T	0.67	0.74	0.81	0.87	0.55	0.62	0.68	0.75	0.49	0.56	0.62	0.68	0.37	0.43	0.49	0.54
		PI	3.75	3.75	3.75	3.75	3.74	3.74	3.74	3.74	3.74	3.74	3.74	3.74	3.75	3.75	3.75	3.75
	-5	TC	16.36	16.36	16.36	16.54	17.24	17.61	17.61	17.61	17.68	17.68	17.68	17.68	18.84	18.84	18.84	18.84
		S/T	0.67	0.74	0.81	0.88	0.56	0.62	0.68	0.75	0.50	0.57	0.62	0.68	0.37	0.43	0.49	0.55
		PI	3.74	3.74	3.74	3.74	3.74	3.74	3.74	3.74	3.74	3.74	3.74	3.74	3.76	3.76	3.76	3.76
	0	TC	16.27	16.28	16.28	16.46	17.18	17.54	17.54	17.54	17.63	17.63	17.63	17.63	18.82	18.82	18.82	18.82
		S/T	0.68	0.74	0.81	0.88	0.56	0.62	0.69	0.75	0.50	0.57	0.63	0.69	0.37	0.43	0.49	0.55
		PI	3.76	3.76	3.76	3.76	3.75	3.75	3.75	3.75	3.76	3.76	3.76	3.76	3.77	3.77	3.77	3.77
	5	TC	16.19	16.20	16.20	16.38	17.11	17.47	17.47	17.47	17.58	17.58	17.58	17.58	18.81	18.81	18.81	18.81
		S/T	0.68	0.75	0.82	0.89	0.56	0.63	0.69	0.76	0.50	0.57	0.63	0.69	0.37	0.43	0.49	0.55
		PI	3.79	3.79	3.79	3.79	3.79	3.79	3.79	3.79	3.79	3.79	3.79	3.79	3.80	3.80	3.80	3.80
	10	TC	16.09	16.10	16.10	16.28	17.03	17.39	17.39	17.39	17.50	17.50	17.50	17.50	18.76	18.76	18.76	18.76
		S/T	0.68	0.75	0.82	0.89	0.56	0.63	0.69	0.76	0.50	0.57	0.63	0.69	0.38	0.44	0.50	0.55
		PI	3.86	3.86	3.86	3.86	3.84	3.84	3.84	3.84	3.84	3.84	3.84	3.84	3.85	3.85	3.85	3.85
	15	TC	15.96	15.97	15.97	16.15	16.92	17.27	17.27	17.27	17.40	17.40	17.40	17.40	18.68	18.68	18.68	18.68
		S/T	0.69	0.76	0.83	0.90	0.57	0.63	0.70	0.77	0.51	0.58	0.64	0.70	0.38	0.44	0.50	0.56
		PI	3.95	3.95	3.95	3.95	3.94	3.94	3.94	3.94	3.93	3.93	3.93	3.93	3.93	3.93	3.93	3.93
	20	TC	15.78	15.79	15.79	15.96	16.74	16.74	16.74	16.74	17.23	17.23	17.23	17.23	18.52	18.52	18.52	18.52
		S/T	0.69	0.76	0.83	0.90	0.57	0.64	0.70	0.77	0.51	0.58	0.64	0.70	0.38	0.44	0.50	0.56
		PI	4.09	4.09	4.09	4.09	4.07	4.07	4.07	4.07	4.06	4.06	4.06	4.06	4.05	4.05	4.05	4.05
	25	TC	15.04	15.04	15.04	15.19	15.99	15.99	15.99	15.99	16.48	16.48	16.48	16.48	17.71	17.71	17.71	17.71
		S/T	0.70	0.77	0.84	0.91	0.57	0.64	0.71	0.78	0.51	0.58	0.65	0.71	0.38	0.44	0.50	0.56
		PI	4.50	4.50	4.50	4.50	4.50	4.50	4.50	4.50	4.50	4.50	4.50	4.50	4.50	4.50	4.50	4.50
	30	TC	14.36	14.36	14.36	14.50	15.25	15.25	15.25	15.25	15.71	15.71	15.71	15.71	16.94	16.94	16.94	16.94
		S/T	0.70	0.78	0.86	0.93	0.57	0.64	0.72	0.79	0.51	0.58	0.65	0.72	0.37	0.44	0.50	0.57
		PI	4.93	4.93	4.93	4.93	4.94	4.94	4.94	4.94	4.95	4.95	4.95	4.95	4.97	4.97	4.97	4.97
	35	TC	13.64	13.64	13.64	13.78	14.50	14.50	14.50	14.50	14.96	14.96	15.19	14.96	16.14	16.14	16.14	16.14
		S/T	0.71	0.79	0.87	0.95	0.58	0.65	0.73	0.80	0.51	0.59	0.66	0.73	0.37	0.44	0.51	0.57
		PI	5.39	5.39	5.39	5.39	5.41	5.41	5.41	5.41	5.42	5.42	5.43	5.42	5.46	5.46	5.46	5.46
	40	TC	12.83	12.83	12.88	13.01	13.66	13.66	13.66	13.66	14.09	14.09	14.22	14.09	15.23	15.23	15.23	15.23
		S/T	0.73	0.81	0.90	0.99	0.58	0.67	0.75	0.83	0.51	0.60	0.68	0.76	0.36	0.44	0.51	0.59
		PI	5.95	5.95	5.95	5.95	5.97	5.97	5.97	5.97	5.98	5.98	5.99	5.98	6.03	6.03	6.03	6.03
	46	TC	11.87	11.87	11.99	12.10	12.68	12.68	12.68	12.68	13.08	13.08	13.08	13.08	14.17	14.17	14.17	14.17
		S/T	0.73	0.83	0.92	1.00	0.59	0.67	0.76	0.85	0.52	0.60	0.69	0.77	0.36	0.44	0.51	0.59
		PI	6.61	6.61	6.61	6.61	6.64	6.64	6.64	6.64	6.66	6.66	6.66	6.66	6.72	6.72	6.72	6.72
	50	TC	11.13	11.13	11.24	11.36	11.90	11.90	11.90	11.90	12.30	12.30	12.30	12.30	13.34	13.34	13.34	13.34
		S/T	0.75	0.85	0.94	1.00	0.59	0.68	0.78	0.87	0.52	0.61	0.70	0.79	0.35	0.44	0.52	0.60
		PI	7.16	7.16	7.16	7.16	7.19	7.19	7.19	7.19	7.21	7.21	7.21	7.21	7.27	7.27	7.27	7.27
1950	-15	TC	16.90	16.90	16.90	17.08	17.77	17.77	17.77	17.77	18.23	18.23	18.23	18.23	19.34	19.34	19.34	19.34
		S/T	0.69	0.76	0.98	1.00	0.56	0.63	0.70	0.77	0.49	0.57	0.64	0.71	0.36	0.42	0.49	0.55
		PI	3.84	3.84	3.84	3.84	3.83	3.83	3.83	3.83	3.83	3.83	3.83	3.83	3.82	3.82	3.82	3.82
	-10	TC	16.80	16.80	16.80	16.98	17.67	17.67	17.67	17.67	18.14	18.14	18.14	18.14	19.28	19.28	19.28	19.28
		S/T	0.69	0.77	0.99	1.00	0.56	0.63	0.71	0.78	0.49	0.57	0.64	0.72	0.36	0.43	0.49	0.55
		PI	3.82	3.82	3.82	3.82	3.82	3.82	3.82	3.82	3.82	3.82	3.82	3.82	3.83	3.83	3.83	3.83
	-5	TC	16.70	16.70	16.70	16.88	17.61	17.61	17.61	17.61	18.07	18.07	18.07	18.07	19.23	19.23	19.23	19.23
		S/T	0.69	0.77	0.99	1.00	0.57	0.63	0.71	0.78	0.50	0.58	0.64	0.72	0.36	0.43	0.50	0.56
		PI	3.82	3.82	3.82	3.82	3.81	3.81	3.81	3.81	3.82	3.82	3.82	3.82	3.83	3.83	3.83	3.83
	0	TC	16.61	16.61	16.61	16.79	17.54	17.54	17.54	17.54	18.02	18.02	18.02	18.02	19.21	19.21	19.21	19.21
		S/T	0.70	0.77	1.00	1.00	0.57	0.64	0.72	0.78	0.50	0.58	0.65	0.73	0.36	0.43	0.50	0.56
		PI	3.83	3.83	3.83	3.83	3.83	3.83	3.83	3.83	3.84	3.84	3.84	3.84	3.85	3.85	3.85	3.85
	5	TC	16.53	16.53	16.53	16.71	17.47	17.47	17.47	17.47	17.96	17.96	17.96	17.96	19.19	19.19	19.19	19.19
		S/T	0.70	0.78	1.00	1.00	0.57	0.64	0.72	0.79	0.50	0.58	0.65	0.73	0.36	0.43	0.50	0.56
		PI	3.87	3.87	3.87	3.87	3.86	3.86	3.86	3.86	3.87	3.87	3.87	3.87	3.87	3.87	3.87	3.87
	10	TC	16.43	16.43	16.43	16.61	17.39	17.39	17.39	17.39	17.89	17.89	17.89	17.89	19.15	19.15	19.15	19.15
		S/T	0.70	0.78	1.00	1.00	0.57	0.64	0.72	0.79	0.50	0.58	0.65	0.73	0.37	0.44	0.50	0.56
		PI	3.93	3.93	3.93	3.93	3.92	3.92	3.92	3.92	3.93	3.93	3.93	3.93	3.93	3.93	3.93	3.93
	15	TC	16.30	16.30	16.30	16.47	17.27	17.27	17.27	17.27	17.78	17.78	17.78	17.78	19.06	19.06	19.06	19.06
		S/T	0.71	0.79	0.87	0.95	0.58	0.65	0.73	0.80	0.51	0.59	0.66	0.74	0.37	0.44	0.51	0.57
		PI	4.03	4.03	4.03	4.03	4.01	4.01	4.01	4.01	4.02	4.02	4.02	4.02	4.01	4.01	4.01	4.01
	20	TC	16.11	16.11	16.11	16.29	17.09	17.09	17.09	17.09	17.61	17.61	17.61	17.61	18.90	18.90	18.90	18.90
		S/T	0.71	0.79	0.87	0.95	0.58	0.65	0.73	0.80	0.51	0.59	0.66	0.74	0.37	0.44	0.51	0.57
		PI	4.17	4.17	4.17	4.17	4.15	4.15	4.15	4.15	4.15	4.15	4.15	4.15	4.13	4.13	4.13	4.13
	25	TC	15.37	15.37	15.51	15.65	16.31	16.31	16.31	16.31	16.80	16.80	16.80	16.80	18.10	18.10	18.10	18.10
		S/T	0.72	0.80	0.88	0.96	0.58	0.66	0.74	0.82	0.51	0.59	0.67	0.75	0.36	0.44	0.51	0.58
		PI	4.59	4.59	4.59	4.59	4.59	4.59	4.59	4.59	4.59	4.59	4.59	4.59	4.60	4.60	4.60	4.60
	30	TC	14.65	14.65	14.79	14.94	15.57	15.57	15.57	15.57	16.06	16.06	16.06	16.06	17.29	17.29	17.29	17.29
		S/T	0.73	0.82	0.90	0.99	0.58	0.67	0.75	0.83	0.52	0.60	0.68	0.76	0.36	0.44	0.51	0.59
		PI	5.03	5.03	5.03	5.03	5.04	5.04	5.04	5.04	5.05	5.05	5.05	5.05	5.07	5.07	5.07	5.07
	35	TC	13.90	13.90	14.05	14.19	14.82	14.82	14.82	14.82	15.28	15.28	15.51	15.28	16.49	16.49	16.49	16.49
		S/T	0.74	0.83	0.92	1.00	0.59	0.67	0.76	0.85	0.52	0.60	0.68	0.77	0.36	0.44	0.52	0.59
		PI	5.50	5.50	5.50	5.50	5.52	5.52	5.52	5.52	5.53	5.53	5.54	5.53	5.53	5.53	5.53	5.53
	40	TC	13.11	13.11	13.24	13.37	13.99	13.99	13.99	14.05	14.43	14.43	14.56	14.43	15.59	15.59	15.59	15.59
		S/T	0.76	0.86	0.96	1.00	0.60	0.69	0.79	0.88	0.52	0.62	0.71	0.80	0.35	0.44	0.52	0.61
		PI	6.08	6.08	6.08	6.08	6.10	6.10	6.10	6.10	6.12	6.12	6.12	6.12	6.14	6.14	6.14	6.14
	46	TC	12.13	12.13	12.25	12.36	12.97	12.97	12.97	13.11	13.40	13.40	13.40	13.40	14.49	14.49	14.49	14.49
		S/T	0.77	0.88	0.98	1.00	0.60	0.70	0.80	0.90	0.52	0.62	0.72	0.82	0.35	0.44	0.53	0.62
		PI	6.76	6.76	6.76	6.76	6.79	6.79	6.79	6.79	6.81	6.81	6.81	6.81	6.86	6.86	6.86	6.86
	50	TC	11.39	11.50	11.62	11.73	12.19	12.19	12.19	12.31	12.59	12.59	12.59	12.59	13.66	13.66	13.66	13.66
		S/T	0.79	0.90	1.00	1.00	0.61	0.72	0.82	0.93	0.53	0.63	0.74	0.84	0.34	0.44	0.54	0.91
		PI	7.32	7.32	7.32	7.32	7.35	7.35	7.35	7.35	7.37	7.37	7.37	7.37	7.43	7.43	7.43	7.43

2200	-15	TC	17.26	17.26	17.44	17.62	18.13	18.13	18.13	18.13	18.59	18.59	18.59	18.59	19.72	19.72	19.72	19.72
		S/T	0.70	0.79	1.00	1.00	0.56	0.65	0.72	0.98	0.50	0.58	0.66	0.73	0.35	0.42	0.49	0.57
		PI	3.92	3.92	3.92	3.92	3.91	3.91	3.91	3.91	3.90	3.90	3.90	3.90	3.90	3.90	3.90	3.90
	-10	TC	17.16	17.16	17.34	17.52	18.03	18.03	18.03	18.03	18.49	18.49	18.49	18.49	19.66	19.66	19.66	19.66
		S/T	0.71	0.80	1.00	1.00	0.56	0.65	0.73	0.98	0.50	0.58	0.66	0.74	0.35	0.43	0.49	0.57
		PI	3.90	3.90	3.90	3.90	3.90	3.90	3.90	3.90	3.90	3.90	3.90	3.90	3.90	3.90	3.90	3.90
	-5	TC	17.06	17.06	17.23	17.41	17.96	17.96	17.96	17.96	18.43	18.43	18.43	18.43	19.61	19.61	19.61	19.61
		S/T	0.71	0.80	1.00	1.00	0.57	0.65	0.73	0.99	0.51	0.59	0.66	0.74	0.35	0.43	0.50	0.58
		PI	3.90	3.90	3.90	3.90	3.89	3.89	3.89	3.89	3.90	3.90	3.90	3.90	3.91	3.91	3.91	3.91
	0	TC	16.97	16.97	17.15	17.33	17.89	17.89	17.89	17.89	18.38	18.38	18.38	18.38	19.59	19.59	19.59	19.59
		S/T	0.72	0.80	1.00	1.00	0.57	0.66	0.74	0.99	0.51	0.59	0.67	0.74	0.35	0.43	0.50	0.58
		PI	3.91	3.91	3.91	3.91	3.91	3.91	3.91	3.91	3.91	3.91	3.91	3.91	3.92	3.92	3.92	3.92
	5	TC	16.88	16.88	17.06	17.24	17.83	17.83	17.83	17.83	18.32	18.32	18.32	18.32	19.57	19.57	19.57	19.57
		S/T	0.72	0.81	1.00	1.00	0.57	0.66	0.74	1.00	0.51	0.59	0.67	0.75	0.35	0.43	0.50	0.58
		PI	3.95	3.95	3.95	3.95	3.94	3.94	3.94	3.94	3.94	3.94	3.94	3.94	3.95	3.95	3.95	3.95
	10	TC	16.78	16.78	16.96	17.13	17.74	17.74	17.74	17.74	18.24	18.24	18.24	18.24	19.52	19.52	19.52	19.52
		S/T	0.72	0.81	1.00	1.00	0.57	0.66	0.74	1.00	0.51	0.59	0.67	0.75	0.36	0.44	0.50	0.58
		PI	4.02	4.02	4.02	4.02	4.00	4.00	4.00	4.00	4.00	4.00	4.00	4.00	4.00	4.00	4.00	4.00
	15	TC	16.65	16.65	16.82	16.99	17.62	17.62	17.62	17.62	18.13	18.13	18.13	18.13	19.44	19.44	19.44	19.44
		S/T	0.73	0.82	0.90	0.99	0.58	0.67	0.75	0.84	0.52	0.60	0.68	0.76	0.36	0.44	0.51	0.59
		PI	4.11	4.11	4.11	4.11	4.10	4.10	4.10	4.10	4.09	4.09	4.09	4.09	4.09	4.09	4.09	4.09
	20	TC	16.46	16.46	16.63	16.80	17.43	17.43	17.43	17.43	17.95	17.95	17.95	17.95	19.27	19.27	19.27	19.27
		S/T	0.73	0.82	0.90	0.99	0.58	0.67	0.75	0.84	0.52	0.60	0.68	0.76	0.36	0.44	0.51	0.59
		PI	4.26	4.26	4.26	4.26	4.24	4.24	4.24	4.24	4.23	4.23	4.23	4.23	4.21	4.21	4.21	4.21
	25	TC	15.68	15.68	15.83	16.00	16.66	16.66	16.66	16.66	17.15	17.15	17.15	17.15	18.47	18.47	18.47	18.47
		S/T	0.74	0.83	0.92	1.00	0.59	0.68	0.76	0.85	0.52	0.60	0.69	0.78	0.36	0.44	0.52	0.60
		PI	4.69	4.69	4.69	4.69	4.68	4.68	4.68	4.68	4.68	4.68	4.68	4.68	4.69	4.69	4.69	4.69
	30	TC	14.94	14.94	15.08	15.22	15.88	15.88	15.88	15.88	16.37	16.37	16.37	16.37	17.64	17.64	17.64	17.64
		S/T	0.75	0.85	0.94	1.00	0.59	0.68	0.78	0.87	0.52	0.61	0.70	0.79	0.35	0.44	0.52	0.60
		PI	5.13	5.13	5.13	5.13	5.14	5.14	5.14	5.14	5.15	5.15	5.15	5.15	5.17	5.17	5.17	5.17
	35	TC	14.19	14.19	14.33	14.48	15.11	15.11	15.11	15.25	15.60	15.60	**15.83**	15.60	16.80	16.80	16.80	16.80
		S/T	0.76	0.86	0.96	1.00	0.60	0.70	0.79	0.89	0.52	0.62	**0.71**	0.81	0.35	0.44	0.53	0.61
		PI	5.61	5.61	5.61	5.61	5.63	5.63	5.63	5.63	5.64	5.64	**5.65**	5.64	5.68	5.68	5.68	5.68
	40	TC	13.38	13.43	13.56	13.69	14.26	14.26	14.26	14.41	14.72	14.72	14.85	14.72	15.89	15.89	15.89	15.89
		S/T	0.79	0.90	1.00	1.00	0.61	0.72	0.82	0.93	0.53	0.63	0.74	0.84	0.34	0.44	0.54	0.90
		PI	6.19	6.19	6.19	6.19	6.22	6.22	6.22	6.22	6.23	6.23	6.24	6.23	6.28	6.28	6.28	6.28
	46	TC	12.39	12.51	12.62	12.74	13.23	13.23	13.23	13.37	13.66	13.66	13.66	13.66	14.78	14.78	14.78	14.78
		S/T	0.80	0.91	1.00	1.00	0.62	0.73	0.84	0.95	0.53	0.64	0.75	0.86	0.34	0.44	0.54	0.92
		PI	6.89	6.89	6.89	6.89	6.92	6.92	6.92	6.92	6.94	6.94	6.94	6.94	7.00	7.00	7.00	7.00
	50	TC	11.62	11.73	11.85	11.96	12.42	12.42	12.42	12.54	12.85	12.85	12.85	12.85	13.92	13.92	13.92	13.92
		S/T	0.82	0.94	1.00	1.00	0.63	0.75	0.86	0.98	0.54	0.65	0.77	0.88	0.34	0.44	0.55	0.97
		PI	7.46	7.46	7.46	7.46	7.49	7.49	7.49	7.49	7.51	7.51	7.51	7.51	7.57	7.57	7.57	7.57

TC:Total Cooling Capacity (kW)

S/T:Sensible Cooling Capacity Ratio

PI:Power Input(kW)

Note: The table shows the case where the operation frequency of a compressor is fixed.

7.2 Heating

18k								[SI_Unit]
INDOOR AIRFLOW (CMH)	HEATING PERFORMANCE AT INDOOR DRY BULB TEMPERATURE							
	OUTDOOR DB(°C)	TC:TOTAL CAPACITY IN KILOWATTS (KW)				PI:TOTAL POWER IN KILOWATTS (KW)			
		Indoor Conditions (DB °C)				Indoor Conditions (DB °C)			
		16.0	20.0	22.0	24.0	16.0	20.0	22.0	24.0
723	-15.0	3.77	3.74	3.72	3.69	1.36	1.40	1.40	1.41
	-10.0	4.02	4.00	3.97	3.94	1.45	1.50	1.50	1.51
	-7.0	4.21	4.19	4.16	4.13	1.54	1.59	1.59	1.60
	-5.6	4.33	4.30	4.27	4.24	1.52	1.55	1.57	1.59
	-2.8	4.45	4.39	4.36	4.33	1.50	1.53	1.54	1.56
	0.0	4.48	4.45	4.42	4.39	1.47	1.50	1.51	1.53
	2.8	4.71	4.65	4.62	4.56	1.46	1.49	1.50	1.52
	5.6	5.06	5.00	4.97	4.94	1.45	1.47	1.49	1.50
	7.0	5.46	5.39	5.28	5.25	1.44	1.47	1.49	1.50
	11.1	5.68	5.63	5.57	5.54	1.42	1.44	1.46	1.47
	13.9	5.92	5.83	5.77	5.74	1.40	1.42	1.44	1.45
	16.7	6.12	6.03	5.97	5.95	1.38	1.40	1.42	1.43
	18.0	6.21	6.12	6.09	6.03	1.37	1.39	1.41	1.42
839	-15.0	3.84	3.81	3.79	3.76	1.38	1.42	1.42	1.43
	-10.0	4.10	4.07	4.05	4.02	1.47	1.52	1.52	1.53
	-7.0	4.29	4.27	4.24	4.21	1.56	1.61	1.61	1.62
	-5.6	4.42	4.39	4.36	4.33	1.54	1.57	1.59	1.60
	-2.8	4.53	4.48	4.45	4.42	1.51	1.54	1.56	1.57
	0.0	4.59	4.53	4.51	4.48	1.49	1.51	1.53	1.54
	2.8	4.80	4.74	4.71	4.68	1.47	1.50	1.52	1.53
	5.6	5.17	5.12	5.09	5.06	1.46	1.49	1.50	1.51
	7.0	5.57	5.51	5.39	5.37	1.46	1.48	1.50	1.51
	11.1	5.83	5.74	5.71	5.66	1.43	1.45	1.46	1.48
	13.9	6.03	5.95	5.92	5.86	1.40	1.43	1.44	1.45
	16.7	6.24	6.15	6.12	6.06	1.38	1.41	1.42	1.43
	18.0	6.35	6.26	6.21	6.18	1.37	1.40	1.41	1.42
958	-15.0	3.90	3.85	3.82	3.80	1.40	1.44	1.44	1.45
	-10.0	4.16	4.11	4.08	4.05	1.49	1.54	1.54	1.54
	-7.0	4.36	4.30	4.27	4.25	1.58	1.63	1.63	1.64
	-5.6	4.48	4.42	4.39	4.36	1.56	1.59	1.61	1.62
	-2.8	4.56	4.51	4.51	4.48	1.53	1.56	1.58	1.59
	0.0	4.62	4.56	4.53	4.51	1.50	1.53	1.55	1.56
	2.8	4.85	4.80	4.74	4.71	1.49	1.52	1.53	1.55
	5.6	5.23	5.17	5.12	5.09	1.48	1.51	1.52	1.53
	7.0	5.63	5.57	5.45	5.42	1.48	1.50	1.52	1.53
	11.1	5.89	5.80	5.77	5.71	1.44	1.47	1.48	1.50
	13.9	6.09	6.00	5.97	5.95	1.42	1.45	1.46	1.47
	16.7	6.32	6.24	6.18	6.15	1.40	1.43	1.44	1.45
	18.0	6.44	6.32	6.29	6.24	1.39	1.42	1.43	1.44

Note: The table shows the case where the operation frequency of a compressor is fixed.

24k									[SI_Unit]
INDOOR AIRFLOW (CMH)	HEATING PERFORMANCE AT INDOOR DRY BULB TEMPERATURE								
	OUTDOOR DB(°C)	TC:TOTAL CAPACITY IN KILOWATTS (KW)				PI:TOTAL POWER IN KILOWATTS (KW)			
		Indoor Conditions (DB °C)				Indoor Conditions (DB °C)			
		16.0	20.0	22.0	24.0	16.0	20.0	22.0	24.0
853	-15.0	5.20	5.15	5.13	5.10	2.27	2.34	2.30	2.32
	-10.0	5.56	5.50	5.48	5.45	2.42	2.50	2.45	2.47
	-7.0	5.82	5.77	5.74	5.71	2.57	2.66	2.61	2.63
	-5.6	5.97	5.91	5.88	5.85	2.51	2.53	2.55	2.56
	-2.8	6.11	6.03	6.00	5.97	2.39	2.42	2.43	2.44
	0.0	6.17	6.08	6.05	6.00	2.28	2.30	2.31	2.32
	2.8	6.43	6.34	6.32	6.26	2.19	2.20	2.21	2.22
	5.6	6.92	6.84	6.81	6.75	2.10	2.11	2.11	2.11
	7.0	7.48	7.39	7.24	7.19	2.05	2.01	2.06	2.07
	11.1	7.79	7.68	7.65	7.59	1.90	1.90	1.90	1.90
	13.9	8.08	7.97	7.91	7.85	1.80	1.80	1.79	1.79
	16.7	8.34	8.23	8.17	8.11	1.70	1.69	1.68	1.68
	18.0	8.49	8.37	8.32	8.23	1.65	1.64	1.63	1.62
1023	-15.0	5.30	5.25	5.20	5.17	2.29	2.37	2.33	2.34
	-10.0	5.66	5.60	5.55	5.52	2.45	2.53	2.48	2.50
	-7.0	5.93	5.87	5.81	5.79	2.60	2.68	2.64	2.66
	-5.6	6.08	6.03	5.97	5.94	2.53	2.56	2.57	2.59
	-2.8	6.23	6.14	6.11	6.08	2.42	2.44	2.45	2.46
	0.0	6.29	6.20	6.17	6.11	2.30	2.32	2.33	2.34
	2.8	6.55	6.49	6.43	6.40	2.21	2.22	2.23	2.24
	5.6	7.07	6.98	6.92	6.90	2.12	2.13	2.13	2.14
	7.0	7.63	7.53	7.39	7.33	2.08	2.03	2.08	2.09
	11.1	7.94	7.85	7.79	7.74	1.92	1.92	1.92	1.92
	13.9	8.23	8.11	8.05	8.00	1.82	1.81	1.81	1.81
	16.7	8.52	8.40	8.34	8.29	1.72	1.70	1.70	1.69
	18.0	8.66	8.52	8.46	8.40	1.67	1.65	1.65	1.64
1192	-15.0	5.36	5.31	5.28	5.26	2.31	2.39	2.34	2.36
	-10.0	5.72	5.67	5.64	5.62	2.46	2.55	2.50	2.52
	-7.0	6.00	5.94	5.91	5.88	2.62	2.71	2.66	2.68
	-5.6	6.14	6.08	6.05	6.03	2.55	2.58	2.60	2.61
	-2.8	6.29	6.23	6.17	6.14	2.44	2.46	2.47	2.49
	0.0	6.34	6.26	6.23	6.20	2.33	2.34	2.35	2.36
	2.8	6.63	6.55	6.52	6.46	2.23	2.25	2.25	2.26
	5.6	7.16	7.07	7.01	6.95	2.14	2.15	2.15	2.16
	7.0	7.71	7.62	7.48	7.42	2.10	2.05	2.10	2.11
	11.1	8.03	7.94	7.88	7.82	1.94	1.94	1.94	1.94
	13.9	8.32	8.20	8.14	8.08	1.84	1.83	1.83	1.83
	16.7	8.61	8.49	8.43	8.37	1.73	1.72	1.72	1.71
	18.0	8.75	8.63	8.58	8.52	1.68	1.67	1.66	1.66

Note: The table shows the case where the operation frequency of a compressor is fixed.

36k+YDAX-100H-09M25									[SI_Unit]
INDOOR AIRFLOW (CMH)	HEATING PERFORMANCE AT INDOOR DRY BULB TEMPERATURE								
	OUTDOOR DB(°C)	TC:TOTAL CAPACITY IN KILOWATTS (KW)				PI:TOTAL POWER IN KILOWATTS (KW)			
		Indoor Conditions (DB °C)				Indoor Conditions (DB °C)			
		16.0	20.0	22.0	24.0	16.0	20.0	22.0	24.0
1504	-15.0	8.07	8.00	7.95	7.92	3.40	3.52	3.48	3.51
	-10.0	8.62	8.54	8.49	8.46	3.63	3.75	3.71	3.74
	-7.0	9.03	8.95	8.89	8.86	3.85	3.98	3.94	3.97
	-5.6	9.24	9.15	9.09	9.06	3.78	3.84	3.86	3.89
	-2.8	9.44	9.32	9.27	9.24	3.66	3.71	3.73	3.76
	0.0	9.53	9.41	9.35	9.30	3.53	3.58	3.60	3.62
	2.8	9.93	9.82	9.76	9.67	3.44	3.48	3.50	3.52
	5.6	10.69	10.57	10.49	10.43	3.34	3.38	3.40	3.42
	7.0	11.50	11.38	11.14	11.08	3.30	3.29	3.35	3.37
	11.1	11.98	11.84	11.75	11.67	3.14	3.17	3.18	3.19
	13.9	12.42	12.25	12.16	12.07	3.03	3.05	3.06	3.07
	16.7	12.83	12.65	12.56	12.45	2.92	2.94	2.94	2.95
	18.0	13.03	12.86	12.74	12.65	2.87	2.88	2.89	2.89
1728	-15.0	8.26	8.16	8.13	8.08	3.44	3.55	3.52	3.54
	-10.0	8.82	8.71	8.68	8.63	3.67	3.79	3.75	3.78
	-7.0	9.24	9.13	9.10	9.04	3.89	4.03	3.98	4.01
	-5.6	9.44	9.32	9.30	9.24	3.83	3.87	3.90	3.93
	-2.8	9.64	9.53	9.47	9.41	3.70	3.75	3.77	3.80
	0.0	9.70	9.59	9.53	9.47	3.57	3.61	3.64	3.66
	2.8	10.14	10.02	9.93	9.88	3.47	3.51	3.53	3.55
	5.6	10.92	10.78	10.72	10.63	3.38	3.41	3.43	3.45
	7.0	11.76	11.61	11.38	11.29	3.33	3.32	3.38	3.40
	11.1	12.25	12.07	11.98	11.90	3.17	3.19	3.21	3.22
	13.9	12.65	12.48	12.39	12.30	3.06	3.08	3.09	3.10
	16.7	13.09	12.91	12.80	12.71	2.94	2.96	2.97	2.97
	18.0	13.29	13.12	13.00	12.91	2.89	2.90	2.91	2.92
1955	-15.0	8.33	8.23	8.21	8.16	3.47	3.59	3.55	3.58
	-10.0	8.90	8.79	8.76	8.71	3.70	3.82	3.79	3.81
	-7.0	9.32	9.21	9.18	9.12	3.93	4.06	4.02	4.05
	-5.6	9.53	9.41	9.38	9.32	3.85	3.91	3.94	3.96
	-2.8	9.73	9.61	9.56	9.50	3.73	3.78	3.81	3.83
	0.0	9.82	9.67	9.61	9.56	3.60	3.65	3.67	3.69
	2.8	10.25	10.11	10.05	9.96	3.50	3.54	3.57	3.59
	5.6	11.04	10.89	10.81	10.75	3.41	3.44	3.46	3.48
	7.0	11.88	11.72	11.49	11.40	3.37	3.35	3.41	3.43
	11.1	12.36	12.19	12.10	12.01	3.20	3.22	3.24	3.25
	13.9	12.80	12.62	12.54	12.45	3.08	3.10	3.11	3.12
	16.7	13.23	13.03	12.94	12.86	2.97	2.99	2.99	3.00
	18.0	13.44	13.23	13.15	13.06	2.92	2.93	2.94	2.94

Note: The table shows the case where the operation frequency of a compressor is fixed.

36k+YDAX-100H-09T35									[SI_Unit]
INDOOR AIRFLOW (CMH)	HEATING PERFORMANCE AT INDOOR DRY BULB TEMPERATURE								
	OUTDOOR DB(°C)	TC:TOTAL CAPACITY IN KILOWATTS (KW)				PI:TOTAL POWER IN KILOWATTS (KW)			
		Indoor Conditions (DB °C)				Indoor Conditions (DB °C)			
		16.0	20.0	22.0	24.0	16.0	20.0	22.0	24.0
1504	-15.0	7.96	7.89	7.83	7.78	3.34	3.46	3.42	3.45
	-10.0	8.50	8.42	8.37	8.31	3.57	3.69	3.65	3.68
	-7.0	8.91	8.82	8.76	8.71	3.79	3.92	3.88	3.91
	-5.6	9.14	9.05	8.99	8.94	3.72	3.78	3.81	3.84
	-2.8	9.34	9.26	9.20	9.14	3.60	3.66	3.69	3.71
	0.0	9.46	9.34	9.29	9.23	3.49	3.54	3.56	3.59
	2.8	9.89	9.75	9.69	9.63	3.40	3.45	3.47	3.49
	5.6	10.68	10.53	10.47	10.39	3.33	3.36	3.38	3.40
	7.0	11.53	11.38	11.14	11.06	3.29	3.29	3.35	3.37
	11.1	12.01	11.84	11.75	11.69	3.14	3.17	3.19	3.21
	13.9	12.45	12.27	12.19	12.10	3.04	3.07	3.08	3.10
	16.7	12.88	12.71	12.62	12.51	2.94	2.96	2.97	2.99
	18.0	13.09	12.91	12.83	12.71	2.90	2.91	2.92	2.93
1728	-15.0	8.11	8.04	7.99	7.94	3.38	3.49	3.46	3.48
	-10.0	8.66	8.58	8.53	8.47	3.60	3.72	3.69	3.72
	-7.0	9.08	8.99	8.93	8.88	3.83	3.96	3.92	3.95
	-5.6	9.31	9.23	9.17	9.11	3.76	3.82	3.85	3.88
	-2.8	9.55	9.43	9.37	9.31	3.64	3.69	3.72	3.75
	0.0	9.63	9.52	9.46	9.40	3.52	3.57	3.59	3.62
	2.8	10.10	9.95	9.89	9.84	3.44	3.48	3.50	3.52
	5.6	10.88	10.74	10.68	10.59	3.35	3.39	3.41	3.43
	7.0	11.76	11.61	11.38	11.29	3.32	3.32	3.38	3.40
	11.1	12.25	12.10	12.01	11.93	3.17	3.20	3.22	3.23
	13.9	12.71	12.54	12.45	12.36	3.07	3.10	3.11	3.12
	16.7	13.15	12.97	12.88	12.77	2.97	2.99	3.00	3.01
	18.0	13.38	13.17	13.09	13.00	2.92	2.94	2.95	2.96
1955	-15.0	8.22	8.12	8.07	8.04	3.41	3.53	3.49	3.52
	-10.0	8.78	8.67	8.62	8.59	3.64	3.76	3.73	3.75
	-7.0	9.20	9.08	9.03	9.00	3.87	4.00	3.96	3.99
	-5.6	9.43	9.31	9.26	9.23	3.80	3.86	3.89	3.92
	-2.8	9.63	9.52	9.46	9.40	3.68	3.73	3.76	3.79
	0.0	9.75	9.60	9.55	9.49	3.56	3.61	3.63	3.65
	2.8	10.18	10.07	9.98	9.92	3.47	3.51	3.54	3.56
	5.6	11.00	10.85	10.79	10.71	3.38	3.42	3.44	3.46
	7.0	11.88	11.72	11.49	11.40	3.36	3.35	3.41	3.43
	11.1	12.36	12.22	12.13	12.04	3.20	3.23	3.25	3.26
	13.9	12.83	12.65	12.56	12.48	3.10	3.12	3.14	3.15
	16.7	13.29	13.09	13.00	12.91	2.99	3.01	3.02	3.03
	18.0	13.49	13.32	13.20	13.12	2.94	2.96	2.97	2.98

Note: The table shows the case where the operation frequency of a compressor is fixed.

48k									[SI_Unit]
INDOOR AIRFLOW (CMH)	HEATING PERFORMANCE AT INDOOR DRY BULB TEMPERATURE								
	OUTDOOR DB(°C)	TC:TOTAL CAPACITY IN KILOWATTS (KW)				PI:TOTAL POWER IN KILOWATTS (KW)			
		Indoor Conditions (DB °C)				Indoor Conditions (DB °C)			
		16.0	20.0	22.0	24.0	16.0	20.0	22.0	24.0
1600	-15.0	10.33	10.20	10.15	10.08	4.64	4.79	4.78	4.82
	-10.0	11.03	10.89	10.84	10.76	4.95	5.11	5.10	5.14
	-7.0	11.55	11.41	11.36	11.27	5.26	5.42	5.41	5.46
	-5.6	11.99	11.85	11.79	11.70	5.20	5.30	5.35	5.40
	-2.8	12.40	12.25	12.17	12.08	5.10	5.21	5.26	5.31
	0.0	12.63	12.49	12.40	12.31	5.01	5.11	5.16	5.21
	2.8	13.36	13.18	13.10	13.01	4.97	5.07	5.11	5.16
	5.6	14.58	14.37	14.29	14.17	4.93	5.02	5.07	5.11
	7.0	15.85	15.63	15.25	15.13	4.92	5.00	5.05	5.10
	11.1	16.61	16.38	16.29	16.18	4.82	4.90	4.95	4.99
	13.9	17.34	17.11	16.99	16.87	4.75	4.83	4.88	4.92
	16.7	18.06	17.80	17.69	17.57	4.68	4.76	4.80	4.84
	18.0	18.41	18.15	18.03	17.89	4.65	4.73	4.77	4.81
1850	-15.0	10.54	10.42	10.37	10.32	4.68	4.83	4.82	4.87
	-10.0	11.26	11.12	11.07	11.02	4.99	5.15	5.14	5.20
	-7.0	11.79	11.65	11.60	11.54	5.31	5.48	5.46	5.52
	-5.6	12.23	12.08	12.02	11.96	5.25	5.35	5.40	5.45
	-2.8	12.66	12.49	12.43	12.34	5.15	5.26	5.31	5.35
	0.0	12.92	12.75	12.66	12.57	5.06	5.16	5.21	5.26
	2.8	13.65	13.47	13.39	13.27	5.02	5.12	5.17	5.21
	5.6	14.87	14.66	14.58	14.46	4.98	5.07	5.12	5.16
	7.0	16.17	15.95	15.57	15.45	4.97	5.05	5.11	5.15
	11.1	16.96	16.73	16.61	16.50	4.87	4.95	5.00	5.04
	13.9	17.69	17.45	17.34	17.22	4.80	4.88	4.92	4.97
	16.7	18.44	18.18	18.03	17.92	4.73	4.81	4.85	4.89
	18.0	18.79	18.53	18.38	18.26	4.70	4.78	4.82	4.86
2100	-15.0	10.64	10.51	10.46	10.41	4.72	4.88	4.87	4.92
	-10.0	11.36	11.23	11.17	11.12	5.04	5.21	5.20	5.24
	-7.0	11.90	11.76	11.70	11.65	5.35	5.53	5.52	5.57
	-5.6	12.34	12.20	12.14	12.08	5.30	5.40	5.45	5.51
	-2.8	12.78	12.63	12.55	12.46	5.21	5.31	5.36	5.41
	0.0	13.04	12.86	12.78	12.69	5.11	5.21	5.27	5.32
	2.8	13.79	13.62	13.50	13.42	5.07	5.17	5.22	5.27
	5.6	15.01	14.81	14.72	14.64	5.03	5.12	5.17	5.22
	7.0	16.34	16.12	15.71	15.63	5.02	5.10	5.16	5.20
	11.1	17.13	16.90	16.79	16.67	4.91	5.00	5.05	5.09
	13.9	17.89	17.66	17.51	17.40	4.84	4.93	4.97	5.02
	16.7	18.64	18.38	18.26	18.12	4.77	4.86	4.90	4.94
	18.0	18.99	18.73	18.61	18.47	4.74	4.82	4.86	4.90

Note: The table shows the case where the operation frequency of a compressor is fixed.

55k								[SI_Unit]
INDOOR AIRFLOW (CMH)	HEATING PERFORMANCE AT INDOOR DRY BULB TEMPERATURE							
	OUTDOOR DB(°C)	TC:TOTAL CAPACITY IN KILOWATTS (KW)				PI:TOTAL POWER IN KILOWATTS (KW)			
		Indoor Conditions (DB °C)				Indoor Conditions (DB °C)			
		16.0	20.0	22.0	24.0	16.0	20.0	22.0	24.0
1650	-15.0	11.22	11.07	11.02	10.95	4.88	5.03	5.07	5.14
	-10.0	11.98	11.82	11.77	11.69	5.20	5.36	5.41	5.48
	-7.0	12.55	12.38	12.33	12.24	5.53	5.70	5.75	5.83
	-5.6	13.11	12.93	12.88	12.79	5.52	5.67	5.74	5.82
	-2.8	13.63	13.49	13.40	13.31	5.52	5.67	5.75	5.83
	0.0	14.01	13.83	13.75	13.63	5.53	5.68	5.76	5.84
	2.8	14.91	14.70	14.62	14.50	5.60	5.75	5.83	5.91
	5.6	16.33	16.12	16.01	15.89	5.66	5.82	5.90	5.97
	7.0	17.87	17.65	17.18	17.07	5.71	5.93	5.95	6.03
	11.1	18.84	18.61	18.46	18.35	5.76	5.92	6.00	6.08
	13.9	19.74	19.48	19.33	19.22	5.80	5.96	6.04	6.12
	16.7	20.64	20.35	20.20	20.06	5.84	6.00	6.08	6.16
	18.0	21.07	20.78	20.64	20.49	5.85	6.02	6.10	6.18
1950	-15.0	11.44	11.29	11.24	11.16	4.92	5.08	5.12	5.19
	-10.0	12.21	12.05	12.00	11.92	5.25	5.42	5.47	5.53
	-7.0	12.79	12.63	12.57	12.49	5.58	5.75	5.81	5.88
	-5.6	13.37	13.20	13.14	13.05	5.57	5.72	5.80	5.87
	-2.8	13.92	13.75	13.66	13.57	5.58	5.73	5.81	5.88
	0.0	14.30	14.09	14.01	13.92	5.59	5.74	5.82	5.89
	2.8	15.20	14.99	14.88	14.79	5.65	5.81	5.89	5.96
	5.6	16.65	16.44	16.33	16.21	5.72	5.88	5.96	6.03
	7.0	18.22	18.00	17.50	17.39	5.77	5.99	6.01	6.09
	11.1	19.22	18.95	18.84	18.69	5.82	5.98	6.06	6.15
	13.9	20.12	19.85	19.71	19.59	5.86	6.02	6.10	6.19
	16.7	21.04	20.75	20.61	20.46	5.90	6.06	6.14	6.23
	18.0	21.48	21.19	21.04	20.90	5.91	6.08	6.16	6.24
2200	-15.0	11.53	11.41	11.33	11.28	4.98	5.13	5.18	5.25
	-10.0	12.31	12.18	12.10	12.05	5.31	5.47	5.52	5.60
	-7.0	12.90	12.76	12.68	12.62	5.64	5.82	5.87	5.95
	-5.6	13.49	13.34	13.25	13.20	5.63	5.79	5.86	5.94
	-2.8	14.07	13.89	13.80	13.72	5.64	5.79	5.87	5.95
	0.0	14.44	14.24	14.15	14.04	5.64	5.80	5.88	5.96
	2.8	15.34	15.14	15.05	14.94	5.71	5.87	5.95	6.02
	5.6	16.82	16.59	16.47	16.36	5.78	5.94	6.01	6.09
	7.0	18.43	18.17	17.68	17.56	5.83	6.05	6.07	6.15
	11.1	19.39	19.13	19.01	18.90	5.88	6.04	6.12	6.21
	13.9	20.32	20.06	19.91	19.77	5.92	6.08	6.16	6.25
	16.7	21.25	20.96	20.81	20.67	5.95	6.12	6.20	6.28
	18.0	21.68	21.39	21.25	21.07	5.97	6.14	6.22	6.30

Note: The table shows the case where the operation frequency of a compressor is fixed.

7. Noise Criterion Curves

7.1 Indoor Unit

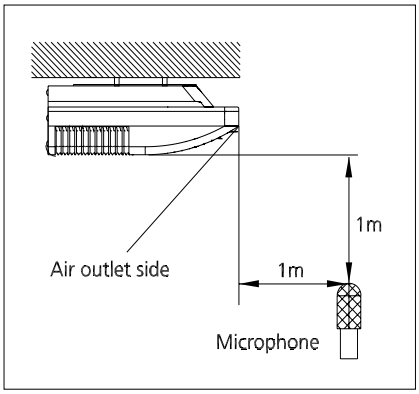

Ceiling

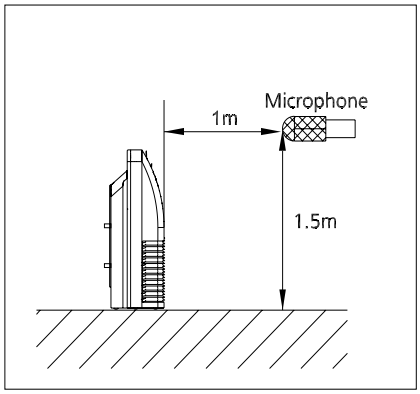

Floor

Notes:

-Sound measured at 1m away from the center of the unit.

-Data is valid at free field condition

-Data is valid at nominal operation condition

-Reference acoustic pressure OdB = 20μPa

-Sound level will vary depending on a range of factors such as the construction -(acoustic absorption coefficient) of particular room in which the equipment is installed.

-The operating conditions are assumed to be standard.

18k

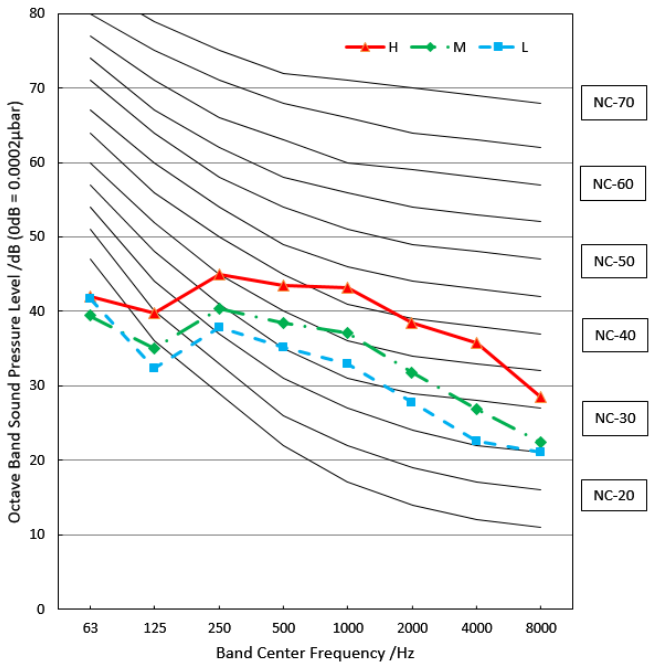

24k

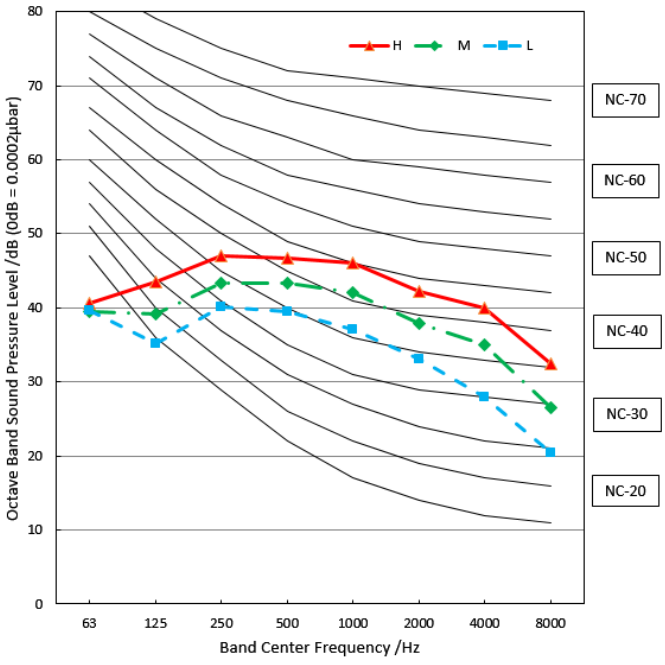

36k

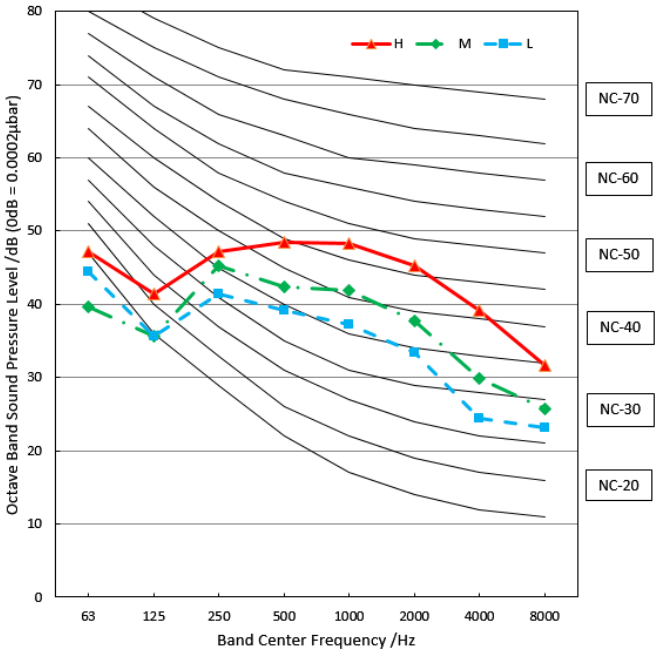
H
M
L
NC-70
NC-60
NC-50
NC-40
NC-30
NC-20
Octave Band Sound Pressure Level /dB (0dB = 0.0002μbar)
Band Center Frequency /Hz
0
10
20
30
40
50
60
70
80
63
125
250
500
1000
2000
4000
8000

48k

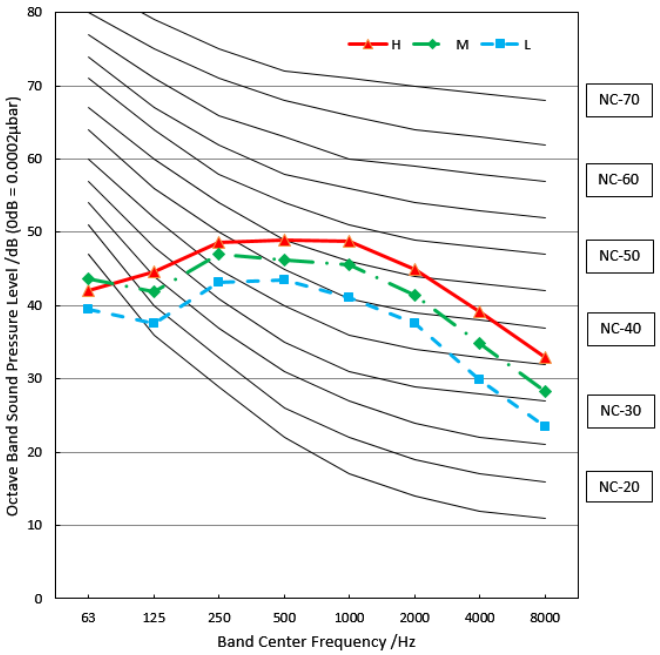
H
M
L
NC-70
NC-60
NC-50
NC-40
NC-30
NC-20
Octave Band Sound Pressure Level /dB (0dB = 0.0002μbar)
Band Center Frequency /Hz
0
10
20
30
40
50
60
70
80
63
125
250
500
1000
2000
4000
8000

55k

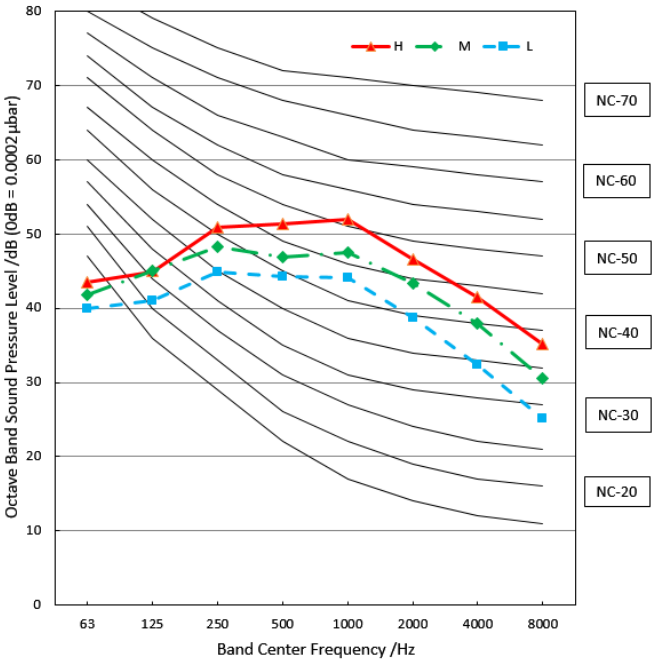
H
M
L
NC-70
NC-60
NC-50
NC-40
NC-30
NC-20
Octave Band Sound Pressure Level /dB (0dB = 0.0002 μbar)
Band Center Frequency /Hz
0
10
20
30
40
50
60
70
80
63
125
250
500
1000
2000
4000
8000

7. Electrical Characteristics

Capacity (Btu/h)		12k~18k	24k	30k	36k
OUDOOR UNIT POWER	Phase	1-phase	1-phase	1-phase	1-phase
	Frequency and Voltage	220-240V, 50Hz	220-240V, 50Hz	220-240V, 50Hz	220-240V, 50Hz
	Power Wiring (mm^2)	3×1.5	3×2.5	3×2.5	3×4.0
	Circuit Breaker/ Fuse (A)	25/20	25/20	50/40	50/40
Indoor/Outdoor Connecting Wiring	Weak Electric Signal)(mm^2)				
	Strong Electric Signal(mm^2)	4×1.0	4×1.0	4×1.0	4×1.0

Capacity (Btu/h)		36k	42k	48~55k
OUDOOR UNIT POWER	Phase	3-phase	1-phase	3-phase
	Frequency and Voltage	380-415V, 50Hz	220-240V, 50Hz	380-415V, 50Hz
	Power Wiring (mm^2)	5×2.5	3×4.0	5×2.5
	Circuit Breaker/ Fuse (A)	25/20	50/40	32/25
Indoor/Outdoor Connecting Wiring	Weak Electric Signal) (mm^2)			
	Strong Electric Signal(mm^2)	4×1.0	3×1.0	4×1.0

7. Electrical Wiring Diagrams

IDU Capacity (Btu/h)	IDU Wiring Diagram
12k~55k	16022700002948

Abbreviation	Paraphrase
Y/G	Yellow-Green Conductor
CAP1	Indoor Fan Capacitor
FAN1	Indoor Fan
PUMP	PUMP
L	LIVE
N	NEUTRAL
TO CCM Comm.Bus	Central Controller
T1	Indoor Room Temperature
T2	Coil Temperature of Indoor Heat Exchanger
P1	Super High Speed
P2	High Speed

Indoor unit wiring diagram: 16022700002948

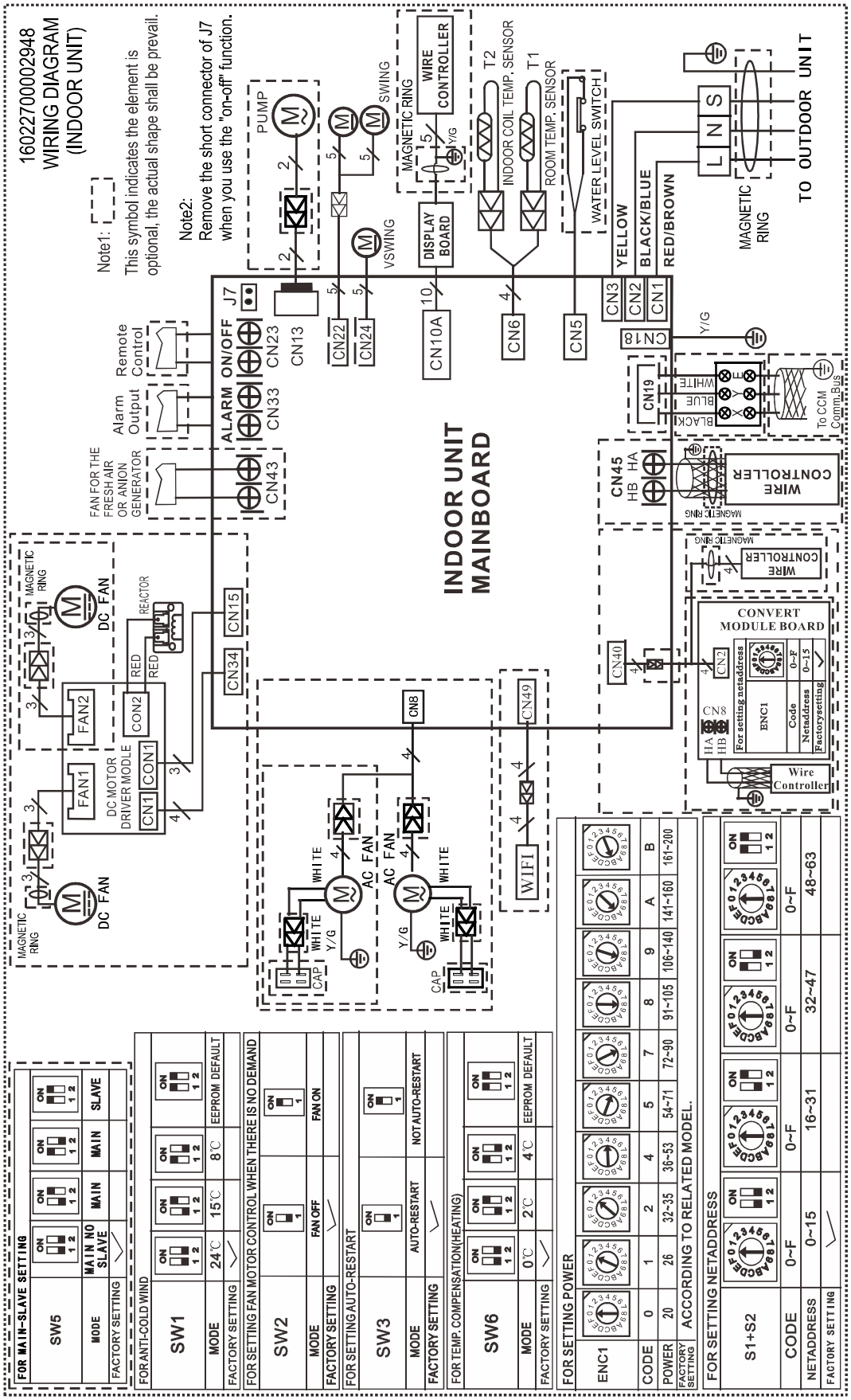

10.1 Some connectors introduce:

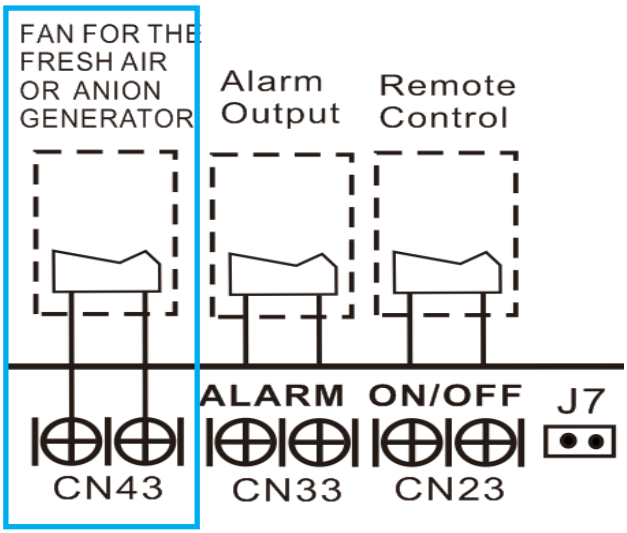

A. For new fresh motor terminal port (also for Anion generator) CN43:
1. Connect the fan motor to the port, no need care L/N of the motor;
2. The output voltage is the power supply;
3. The fresh motor can not excess 200W or 1A, follow the smaller one;
4. The new fresh motor will be worked when the indoor fan motor work ;when the indoor fan motor stops , the new fresh motor would be stopped;
5. When the unit enters force cooling mode or capacity testing mode , the fresh motor isn't work.

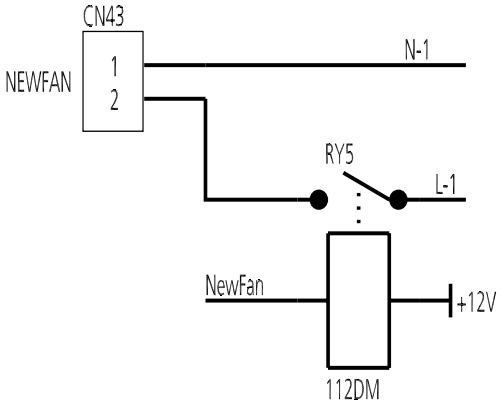

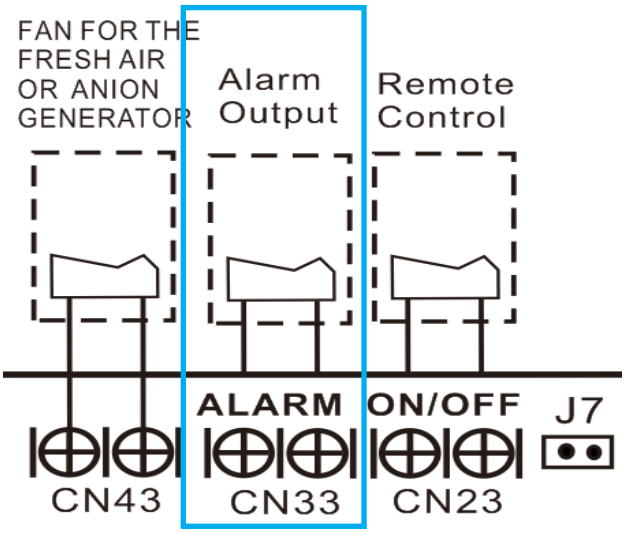

B For ALARM terminal port CN33

1. Provide the terminal port to connect ALARM, but no voltage of the terminal port, the power from the ALARM system (not from the unit);
2. Although design voltage can support higher voltage, but we strongly ask you connect the power less than 24V, current less than 0.5A;
3. When the unit occurs the problem, the relay would be closed, then ALARM works.

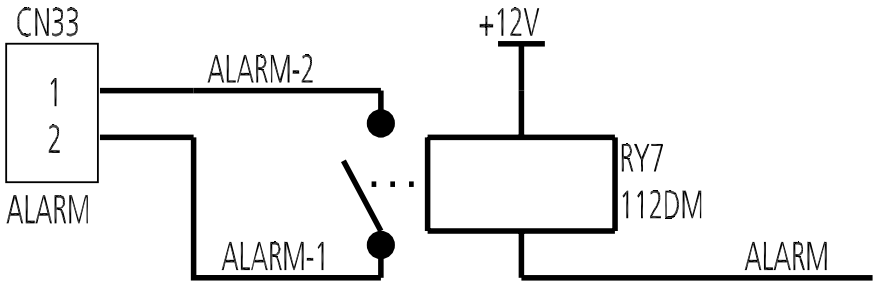

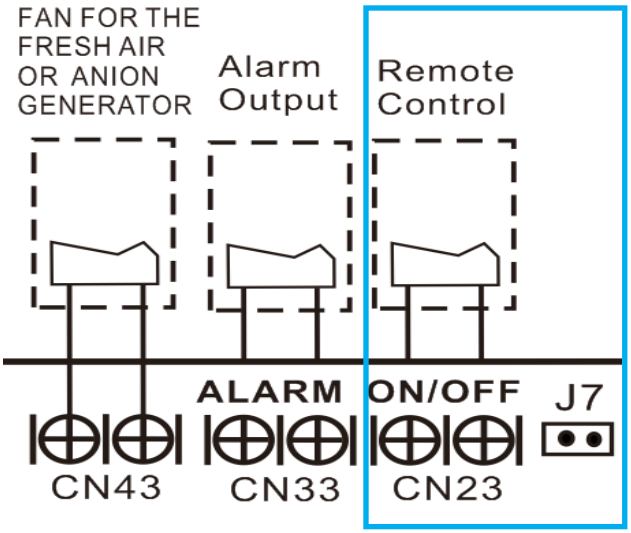

C. For remote control (ON-OFF) terminal port CN23 and short connector of J7

1. Remove the short connector of J7 when you use ON-OFF function;
2. When remote switch off (OPEN); the unit would be off;
3. When remote switch on (CLOSE); the unit would be on;
4. When close/open the remote switch, the unit would be responded the demand within 2 seconds;
5. When the remote switch on, you can use remote controller/ wire controller to select the mode what you want; when the remote switch off, the unit would not respond the demand from remote controller/wire controller.

when the remote switch off, but the remote controller/wire controller are on, CP code would be shown on the display board.

6. The voltage of the port is 12V DC, design Max. current is 5mA.

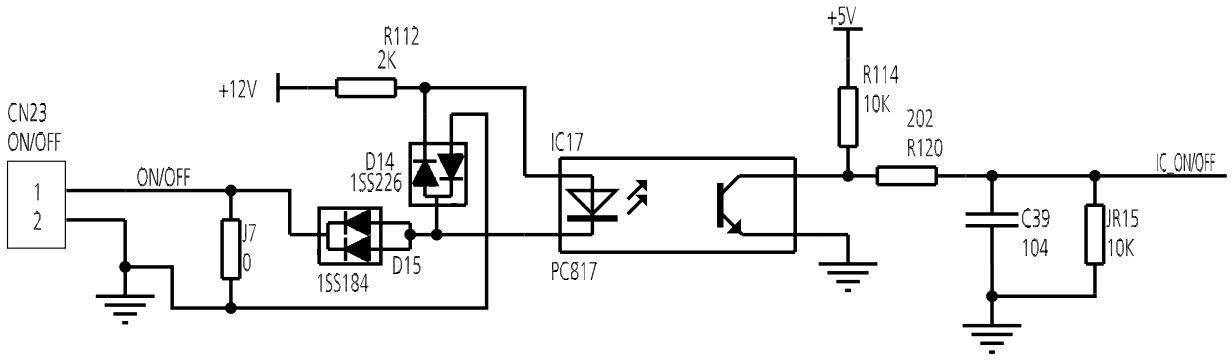

10.2 Micro-Switch Introduce:

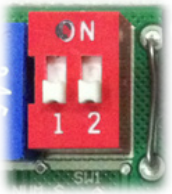

FOR ANTI-COLD WIND				
SW1	ON 1 2	ON 1 2	ON 1 2	ON 1 2
TEL0	24℃	15℃	8℃	EEPROM DEFAULT
FACTORY SETTING	✓			

A. Micro-switch SW1 is for selection of indoor fan stop temperature (TEL0) when it is in anti-cold wind action in heating mode.

Range: 24°C, 15°C, 8°C, according to EEROM setting (reserved for special customizing).

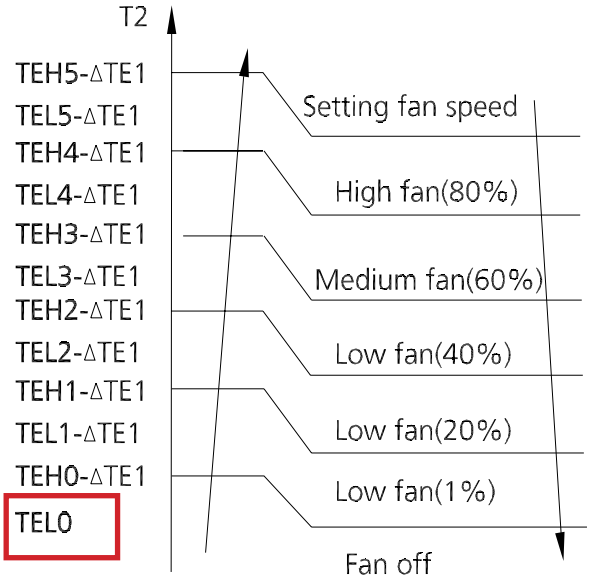



FOR SETTING FAN MOTOR CONTROL WHEN THERE IS NO DEMAND		
SW2	ON 1	ON 1
MODE	FAN OFF	FAN ON
FACTORY SETTING	✓	

B. Micro-switch SW2 is for selection of indoor FAN ACTION if room temperature reaches the set point and the compressor stops.

Range: OFF (in 127s), Keep running.



FOR SETTING AUTO-RESTART		
SW3	ON 1	ON 1
MODE	AUTO-RESTART	NOT AUTO-RESTART
FACTORY SETTING	✓	

C. Micro-switch SW3 is for selection of auto-restart function.

Range: Active, inactive



FOR TEMP. COMPENSATION(HEATING)				
SW6	ON 1 2	ON 1 2	ON 1 2	ON 1 2
CODE	0℃	2℃	4℃	EEPROM default
FACTORY SETTING	✓			

D. Micro-switch SW6 is for selection of temperature compensation in heating mode. This helps to reduce the real temperature difference between ceiling and floor so that the unit could run properly. If the height of installation is lower, smaller value could be chosen.

Range: 6°C, 4°C, 2°C, E function (reserved for special customizing)

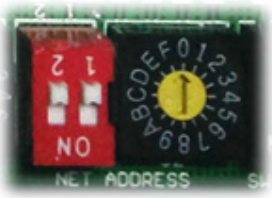

FOR SETTING NETADDRESS				
S1+S2	ON 1 2	ON 1 2	ON 1 2	ON 1 2
CODE	0~F	0~F	0~F	0~F
NETADDRESS	0~15	16~31	32~47	48~63
FACTORY SETTING	✓			

E. Micro-switch S1 and dial-switch S2 are for address setting when you want to control this unit by a central controller.

Range: 00-63



FOR SETTING POWER(DC MOTOR MODEL ONLY)										
ENC1										
CODE	0	1	2	4	5	7	8	9	A	B
POWER	20	26	32~35	36~53	54~71	72~90	91~105	106~140	141~160	161~200
FACTORY SETTING	ACCORDING TO RELATED MODEL.									

F. Dial-switch ENC1: The indoor PCB is universal designed for whole series units from 7K to 68K. This ENC1 setting will tell the main program what size the unit is.

NOTE: Usually there is glue on it because the switch position cannot be changed at random unless you want to use this PCB as a spare part to use in another unit. Then you have to select the right position to match the size of the unit.

“20” means 2kW (7K),“105” means 10.5kW(36K), and so on.

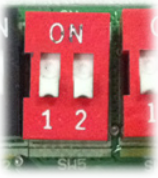

FOR MAIN-SLAVE SETTING				
SW5	ON 1 2	ON 1 2	ON 1 2	ON 1 2
MODE	MAIN NO SLAVE	MAIN	MAIN	SLAVE
FACTORY SETTING	✓			

G. Micro-switch SW5 is for setting the master or slave unit when the unit is in twin connection.

Range: Master no slave (Normal 1 drive 1 connection), Master (2 positions without difference), Slave

Outdoor Unit

Contents

1. Dimensional Drawings 2
2. Service Place 12
3. Capacity Correction Factor for Height Difference 13
4. Noise Criterion Curves 20
5. Refrigerant Cycle Diagrams 23
6. Electrical Wiring Diagrams 26

1. Dimensional Drawings

Please check the corresponding dimensional drawing according to the panel plate.

ODU Model	Panel Plate
YDAX-035H-09M25	X230
YDAX-050H-09M25	X330
YDAX-070H-09M25	X430
YDAX-100H-09M25	D30
YDAX-100H-09T35	D30
YDAX-140H-09T35	E30
YDAX-175H-09T35	E30

Panel Plate B30

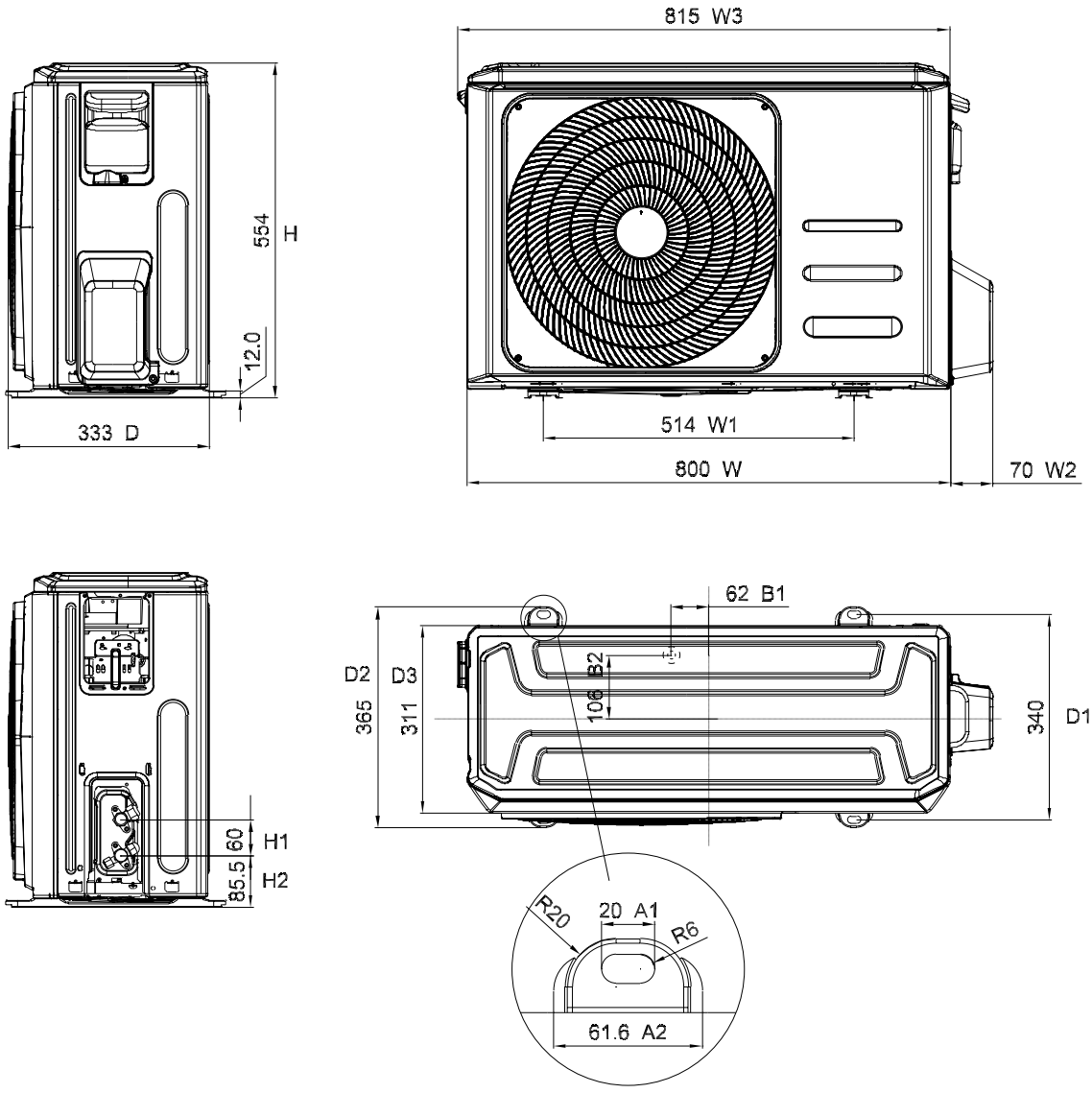

Panel Plate BA30

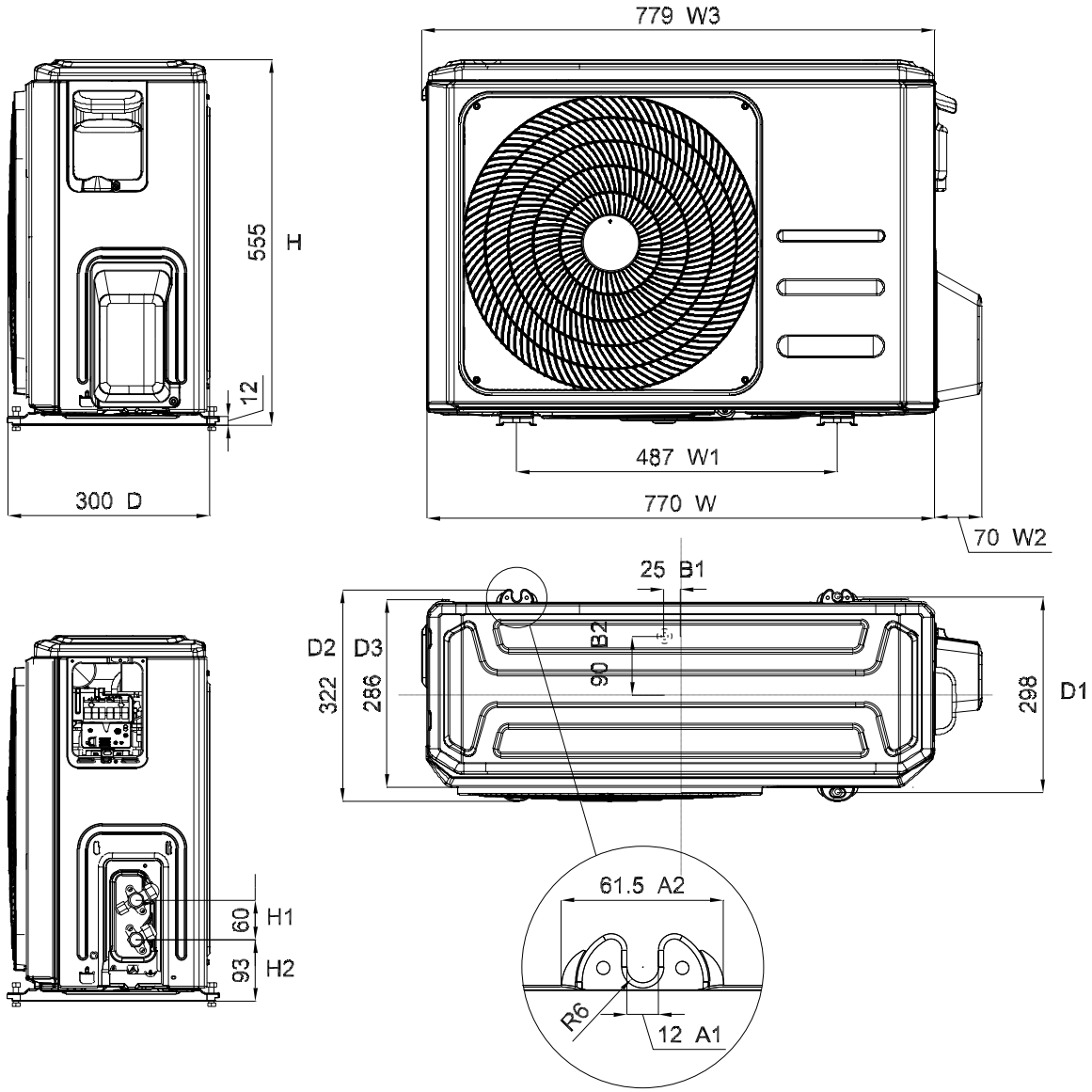

Panel Plate CA30

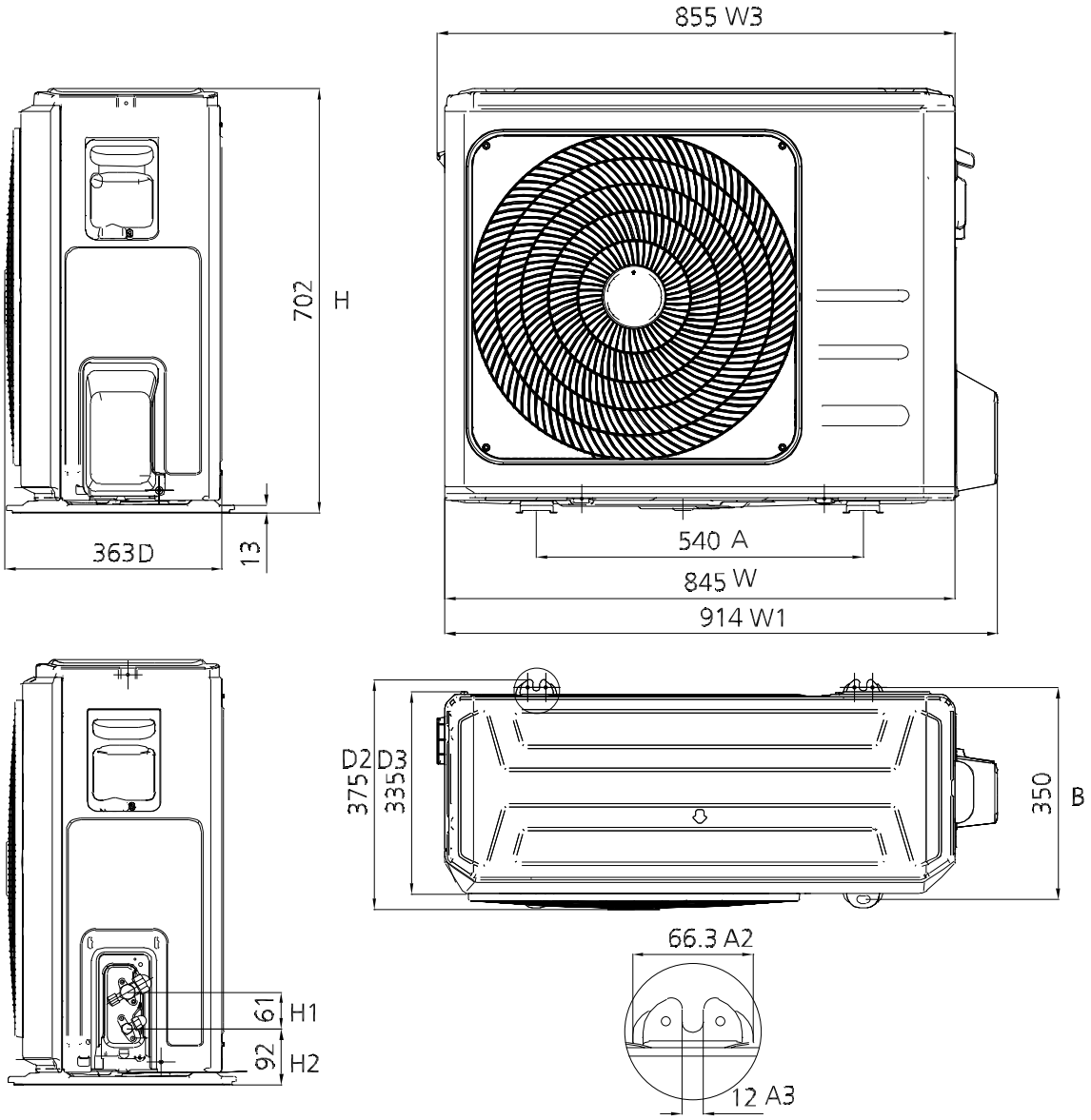

Panel Plate D30

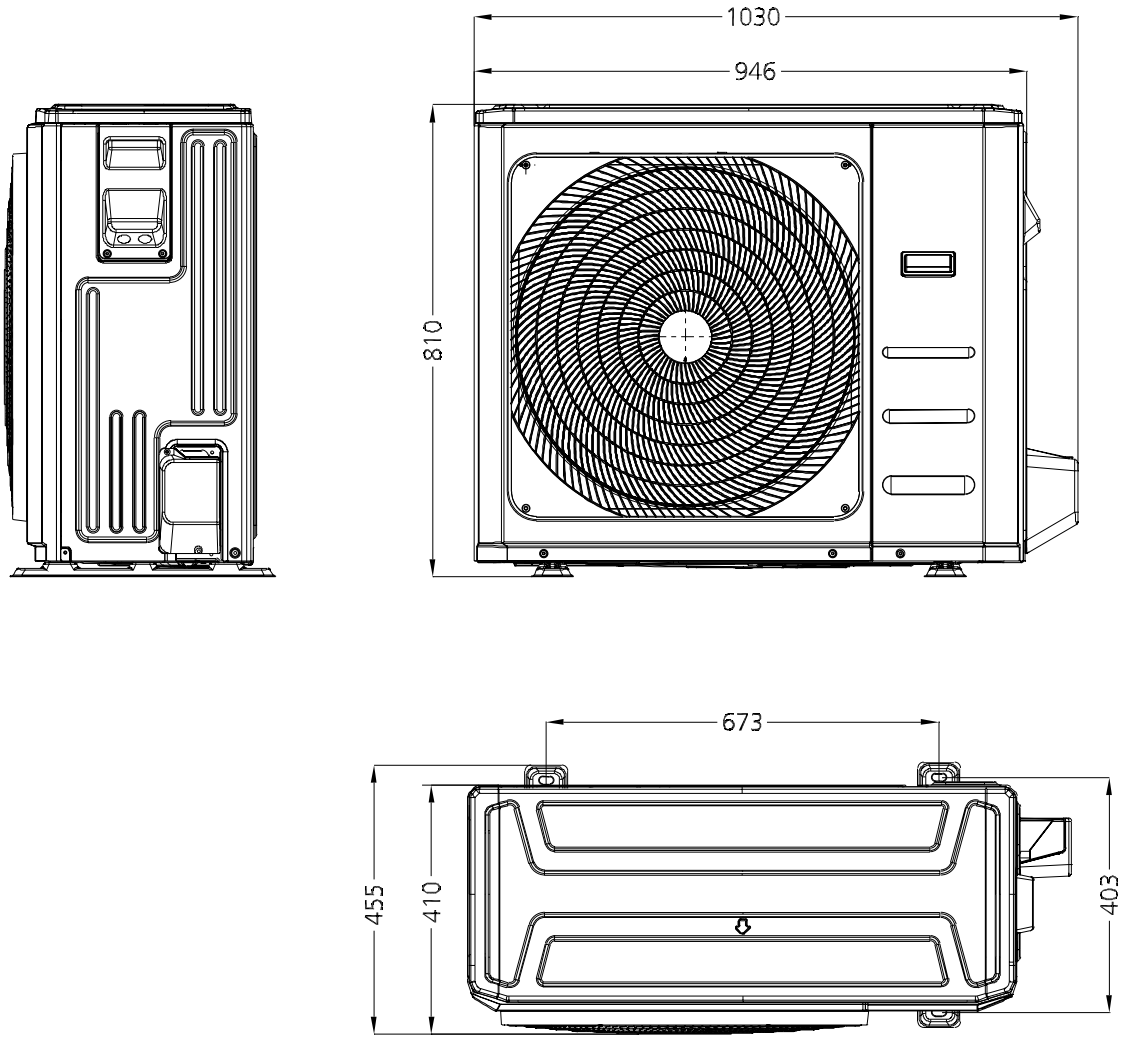

Panel Plate X230

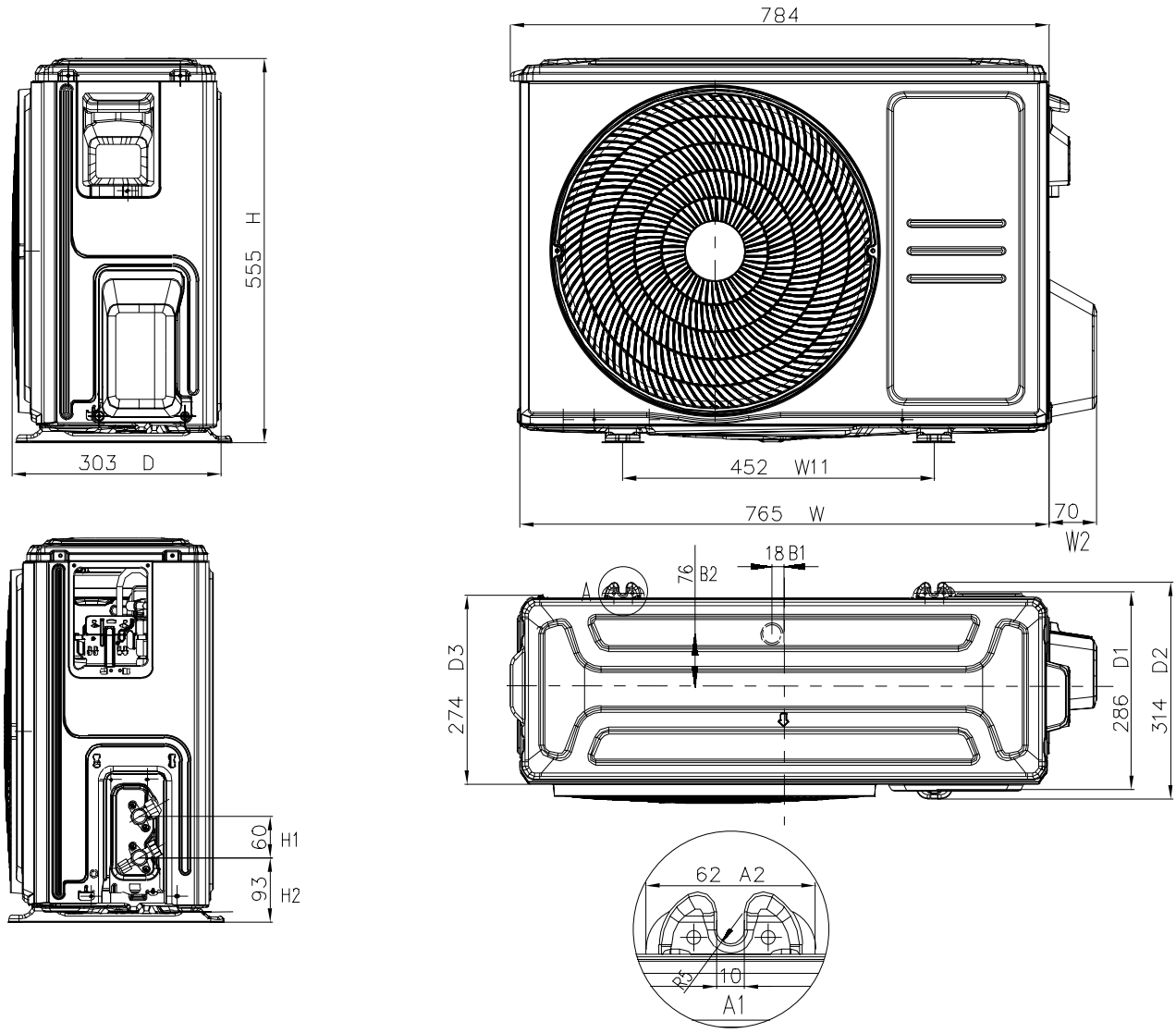

Panel Plate X330

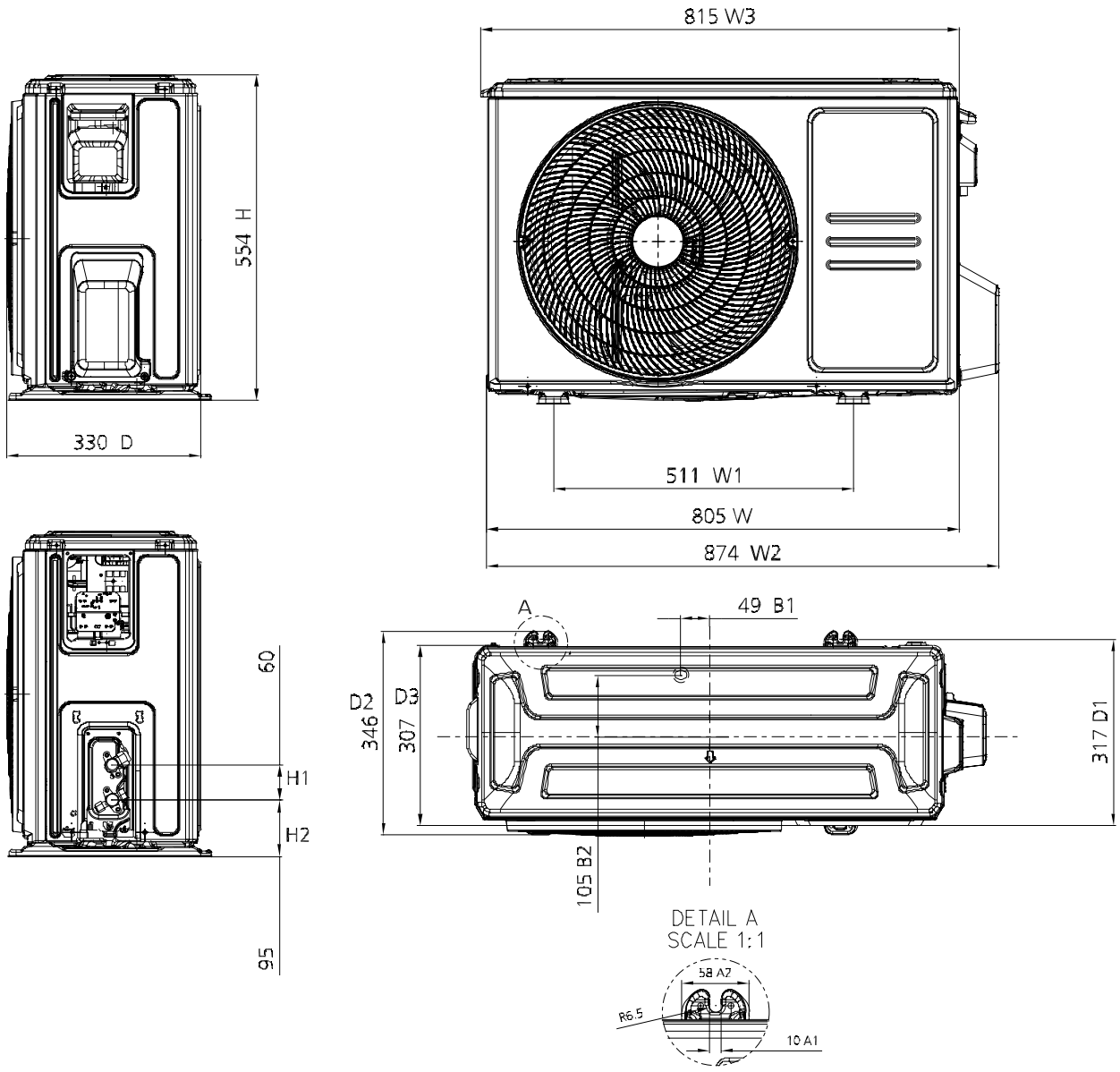

Panel Plate X430

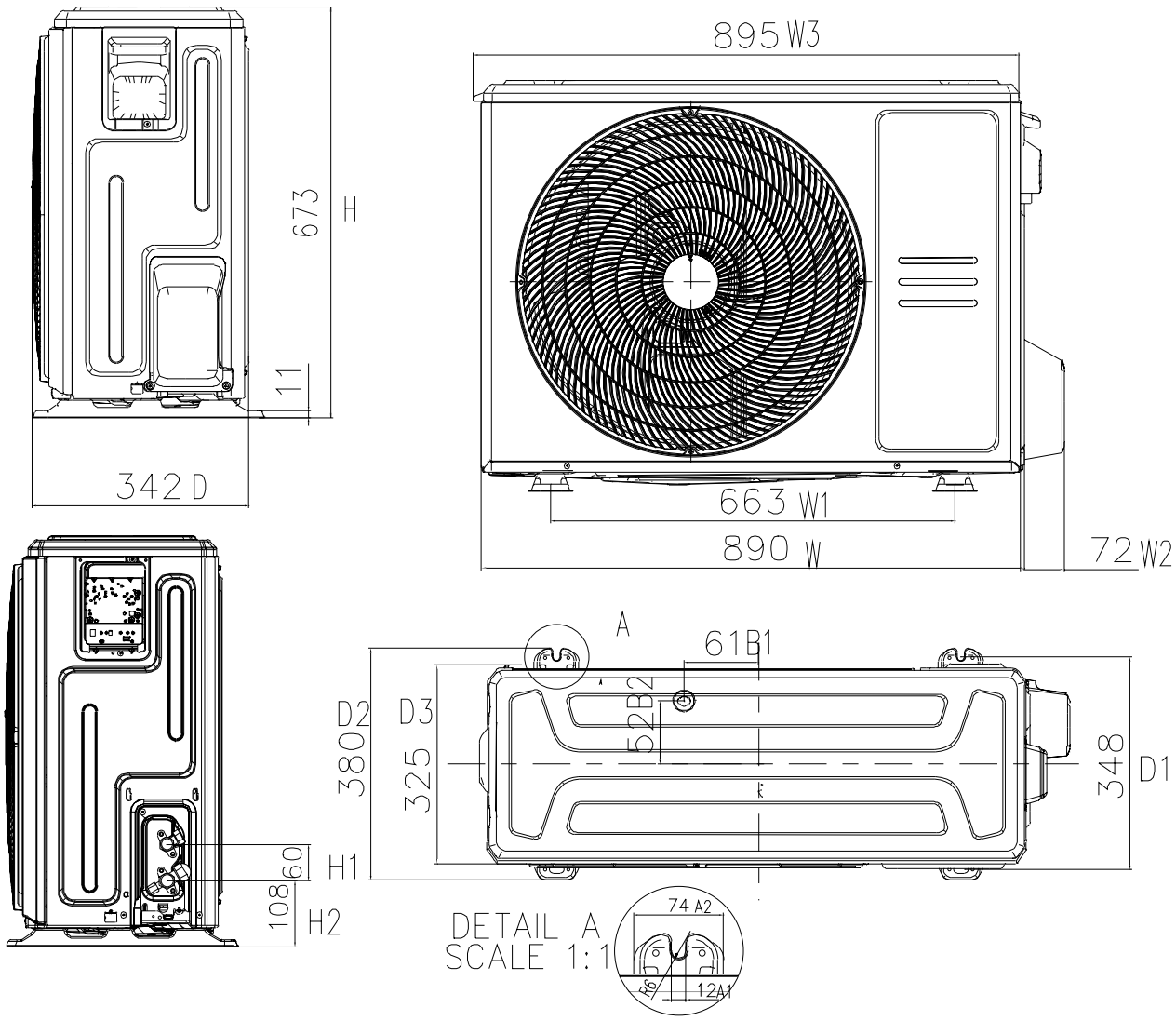

Panel Plate E30

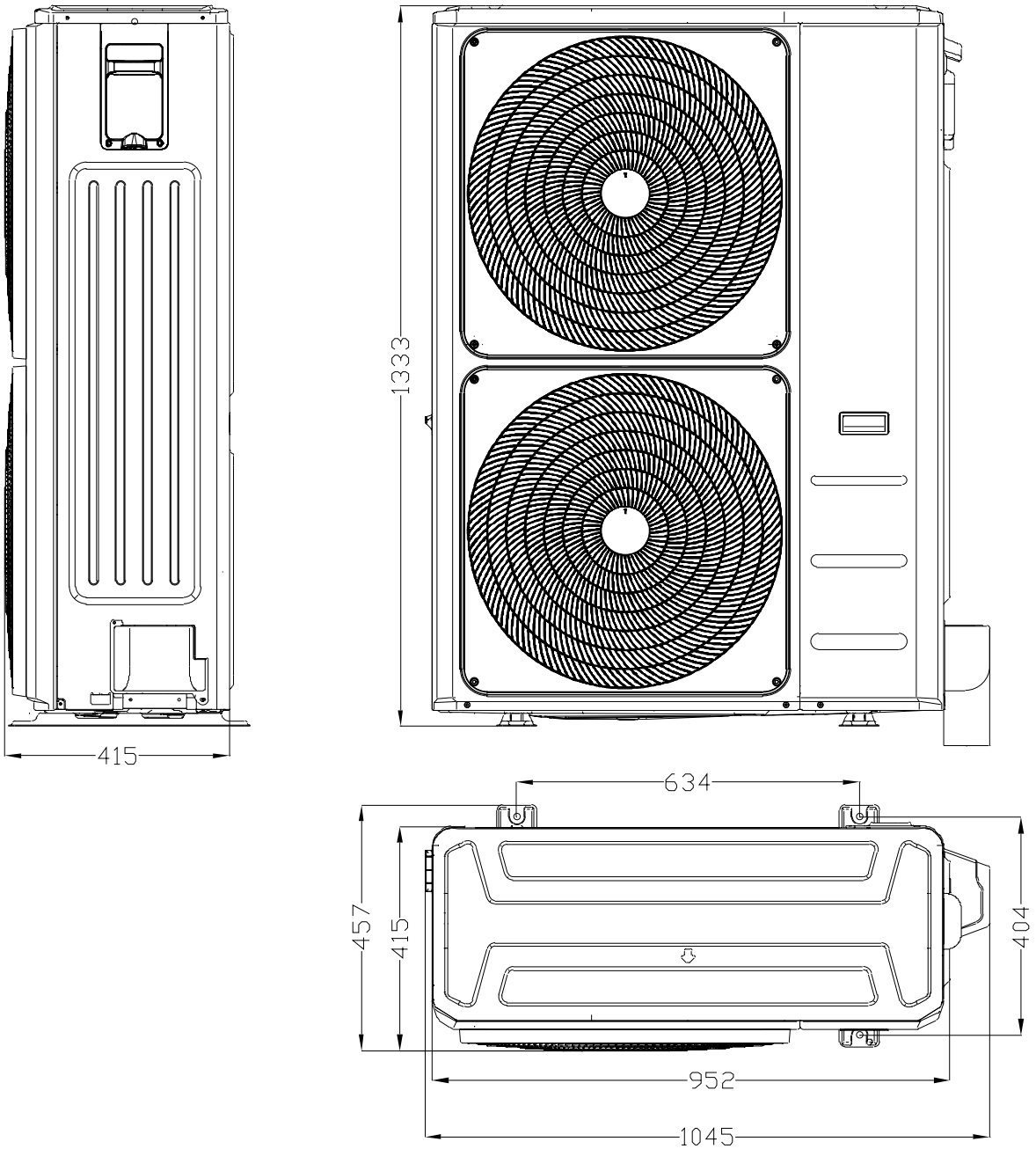

Panel Plate 590

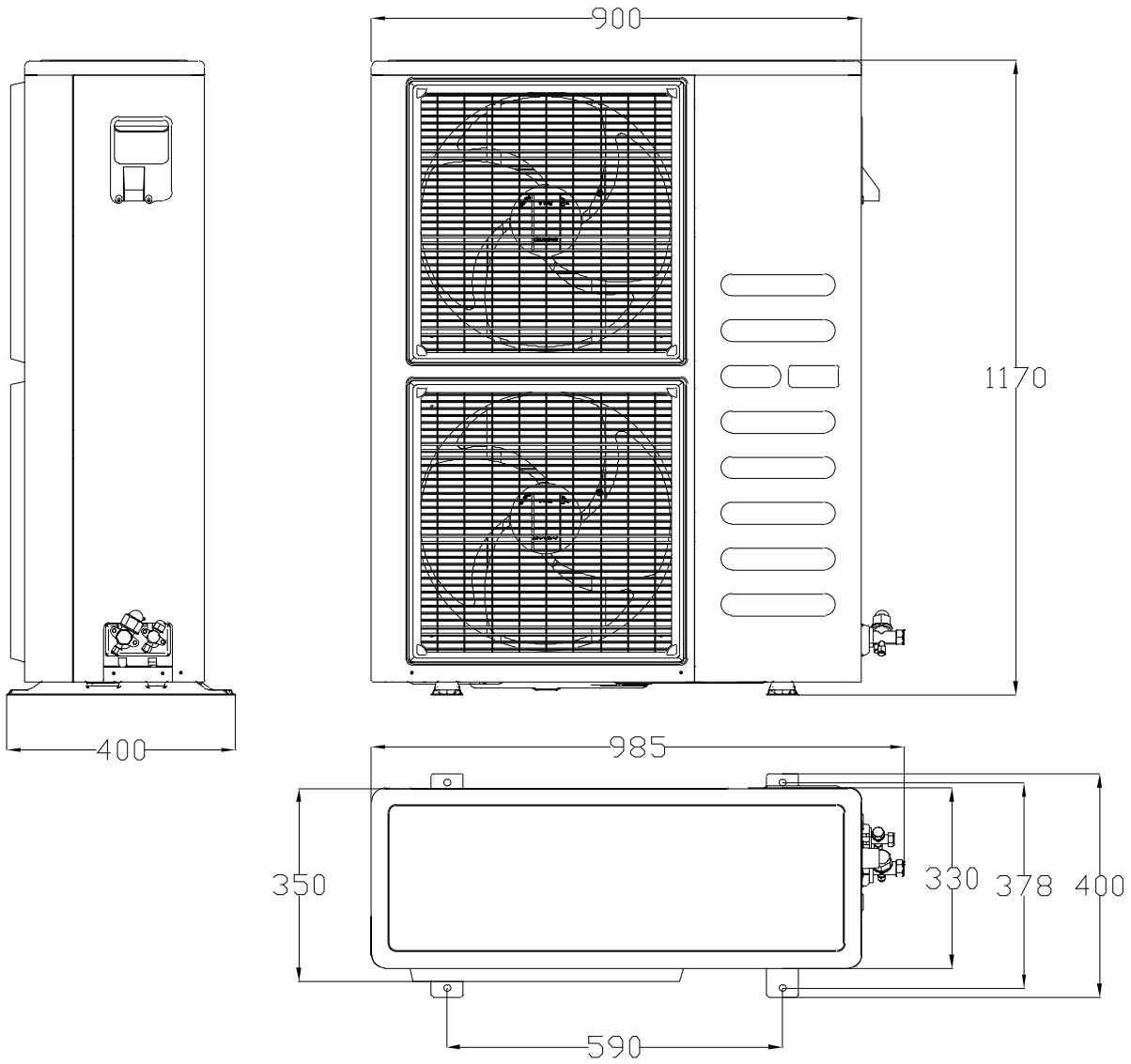

2. Service Place

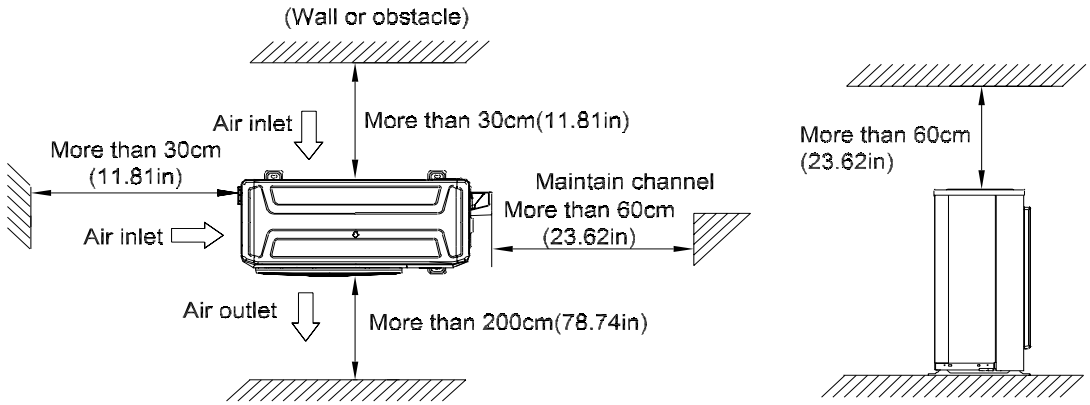

3. Capacity Correction Factor for Height Difference

Capacity(Btu/h)	12k		Pipe Length (m)			
Cooling			5	10	20	25
Height difference H (m)	Indoor Upper than Outdoor	10		0.973	0.948	0.936
		5	0.995	0.983	0.958	0.945
		0	1.000	0.988	0.963	0.950
	Outdoor Upper than Indoor	-5	1.000	0.988	0.963	0.950
		-10		0.988	0.963	0.950
Heating			5	10	15	20
Height difference H (m)	Indoor Upper than Outdoor	10		0.993	0.978	0.970
		5	1.000	0.993	0.978	0.970
		0	1.000	0.993	0.978	0.970
	Outdoor Upper than Indoor	-5	0.992	0.985	0.970	0.962
		-10		0.977	0.962	0.955

Capacity(Btu/h)	18k		Pipe Length (m)			
Cooling			5	10	20	30
Height difference H (m)	Indoor Upper than Outdoor	20			0.928	0.912
		10		0.969	0.937	0.921
		5	0.995	0.979	0.946	0.930
		0	1.000	0.984	0.951	0.935
	Outdoor Upper than Indoor	-5	1.000	0.984	0.951	0.935
		-10		0.984	0.951	0.935
		-20			0.951	0.935
Heating			5	10	20	30
Height difference H (m)	Indoor Upper than Outdoor	20			0.982	0.976
		10		0.994	0.982	0.976
		5	1.000	0.994	0.982	0.976
		0	1.000	0.994	0.982	0.976
	Outdoor Upper than Indoor	-5	0.992	0.986	0.974	0.968
		-10		0.978	0.966	0.960
		-20			0.959	0.953

Capacity (Btu/h)	24k		Pipe Length (m)					
Cooling			5	10	20	30	40	50
Height difference H (m)	Indoor Upper than Outdoor	25				0.914	0.894	0.874
		20			0.944	0.924	0.903	0.883
		10		0.975	0.954	0.933	0.912	0.891
		5	0.995	0.984	0.963	0.942	0.921	0.900
		0	1.000	0.989	0.968	0.947	0.926	0.905
	Outdoor Upper than Indoor	-5	1.000	0.989	0.968	0.947	0.926	0.905
		-10		0.989	0.968	0.947	0.926	0.905
		-20			0.968	0.947	0.926	0.905
		-25				0.947	0.926	0.905
Heating			5	10	20	30	40	50
Height difference H (m)	Indoor Upper than Outdoor	25				0.983	0.977	0.970
		20			0.990	0.983	0.977	0.970
		10		0.997	0.990	0.983	0.977	0.970
		5	1.000	0.997	0.990	0.983	0.977	0.970
		0	1.000	0.997	0.990	0.983	0.977	0.970
	Outdoor Upper than Indoor	-5	0.992	0.989	0.982	0.975	0.969	0.962
		-10		0.981	0.974	0.968	0.961	0.955
		-20			0.966	0.960	0.953	0.947
		-25				0.952	0.946	0.939

Capacity (Btu/h)	30k		Pipe Length (m)					
Cooling			5	10	20	30	40	50
Height difference H (m)	Indoor Upper than Outdoor	25				0.887	0.856	0.824
		20			0.928	0.896	0.864	0.833
		10		0.969	0.937	0.905	0.873	0.841
		5	0.995	0.979	0.947	0.914	0.882	0.850
		0	1.000	0.984	0.951	0.919	0.886	0.854
	Outdoor Upper than Indoor	-5	1.000	0.984	0.951	0.919	0.886	0.854
		-10		0.984	0.951	0.919	0.886	0.854
		-20			0.951	0.919	0.886	0.854
		-25				0.919	0.886	0.854
Heating			5	10	20	30	40	50
Height difference H (m)	Indoor Upper than Outdoor	25				0.958	0.942	0.925
		20			0.975	0.958	0.942	0.925
		10		0.992	0.975	0.958	0.942	0.925
		5	1.000	0.992	0.975	0.958	0.942	0.925
		0	1.000	0.992	0.975	0.958	0.942	0.925
	Outdoor Upper than Indoor	-5	0.992	0.984	0.967	0.951	0.934	0.918
		-10		0.976	0.959	0.943	0.927	0.910
		-20			0.952	0.936	0.919	0.903
		-25				0.928	0.912	0.896

Capacity (Btu/h)	36k		Pipe Length (m)						
Cooling			5	15	25	35	50	65	75
Height difference H (m)	Indoor Upper than Outdoor	30				0.885	0.845	0.805	0.778
		20			0.921	0.894	0.854	0.813	0.786
		10		0.958	0.931	0.903	0.862	0.822	0.794
		5	0.995	0.967	0.940	0.912	0.871	0.830	0.802
		0	1.000	0.972	0.945	0.917	0.876	0.834	0.806
	Outdoor Upper than Indoor	-5	1.000	0.972	0.945	0.917	0.876	0.834	0.806
		-10		0.972	0.945	0.917	0.876	0.834	0.806
		-20			0.945	0.917	0.876	0.834	0.806
		-30				0.917	0.876	0.834	0.806
Heating			5	15	25	35	50	65	75
Height difference H (m)	Indoor Upper than Outdoor	30				0.962	0.943	0.924	0.911
		20			0.975	0.962	0.943	0.924	0.911
		10		0.987	0.975	0.962	0.943	0.924	0.911
		5	1.000	0.987	0.975	0.962	0.943	0.924	0.911
		0	1.000	0.987	0.975	0.962	0.943	0.924	0.911
	Outdoor Upper than Indoor	-5	0.992	0.979	0.967	0.954	0.935	0.917	0.904
		-10		0.972	0.959	0.947	0.928	0.909	0.896
		-20			0.951	0.939	0.921	0.902	0.889
		-30				0.932	0.913	0.895	0.882

Capacity (Btu/h)	42k		Pipe Length (m)						
Cooling			5	15	25	35	50	65	75
Height difference H (m)	Indoor Upper than Outdoor	30				0.881	0.839	0.797	0.769
		20			0.919	0.890	0.848	0.806	0.777
		10		0.956	0.928	0.899	0.857	0.814	0.785
		5	0.995	0.966	0.937	0.908	0.865	0.822	0.793
		0	1.000	0.971	0.942	0.913	0.870	0.826	0.797
	Outdoor Upper than Indoor	-5	1.000	0.971	0.942	0.913	0.870	0.826	0.797
		-10		0.971	0.942	0.913	0.870	0.826	0.797
		-20			0.942	0.913	0.870	0.826	0.797
		-30				0.913	0.870	0.826	0.797
Heating			5	15	25	35	50	65	75
Height difference H (m)	Indoor Upper than Outdoor	30				0.960	0.940	0.920	0.907
		20			0.973	0.960	0.940	0.920	0.907
		10		0.987	0.973	0.960	0.940	0.920	0.907
		5	1.000	0.987	0.973	0.960	0.940	0.920	0.907
		0	1.000	0.987	0.973	0.960	0.940	0.920	0.907
	Outdoor Upper than Indoor	-5	0.992	0.979	0.966	0.952	0.932	0.913	0.900
		-10		0.971	0.958	0.945	0.925	0.905	0.893
		-20			0.950	0.937	0.918	0.898	0.885
		-30				0.930	0.910	0.891	0.878

Capacity (Btu/h)	48k		Pipe Length (m)						
Cooling			5	15	25	35	50	65	75
Height difference H (m)	Indoor Upper than Outdoor	30				0.880	0.838	0.796	0.768
		20			0.918	0.889	0.846	0.804	0.775
		10		0.956	0.927	0.898	0.855	0.812	0.783
		5	0.995	0.966	0.937	0.907	0.864	0.820	0.791
		0	1.000	0.971	0.941	0.912	0.868	0.824	0.795
	Outdoor Upper than Indoor	-5	1.000	0.971	0.941	0.912	0.868	0.824	0.795
		-10		0.971	0.941	0.912	0.868	0.824	0.795
		-20			0.941	0.912	0.868	0.824	0.795
		-30				0.912	0.868	0.824	0.795
Heating			5	15	25	35	50	65	75
Height difference H (m)	Indoor Upper than Outdoor	30				0.956	0.933	0.911	0.896
		20			0.970	0.956	0.933	0.911	0.896
		10		0.985	0.970	0.956	0.933	0.911	0.896
		5	1.000	0.985	0.970	0.956	0.933	0.911	0.896
		0	1.000	0.985	0.970	0.956	0.933	0.911	0.896
	Outdoor Upper than Indoor	-5	0.992	0.977	0.963	0.948	0.926	0.904	0.889
		-10		0.969	0.955	0.940	0.918	0.896	0.882
		-20			0.947	0.933	0.911	0.889	0.875
		-30				0.925	0.904	0.882	0.868

Capacity (Btu/h)	55k		Pipe Length (m)						
Cooling			5	15	25	35	50	65	75
Height difference H (m)	Indoor Upper than Outdoor	30				0.866	0.816	0.767	0.734
		20			0.908	0.875	0.825	0.774	0.741
		10		0.951	0.917	0.884	0.833	0.782	0.749
		5	0.995	0.961	0.927	0.893	0.841	0.790	0.756
		0	1.000	0.966	0.931	0.897	0.846	0.794	0.760
	Outdoor Upper than Indoor	-5	1.000	0.966	0.931	0.897	0.846	0.794	0.760
		-10		0.966	0.931	0.897	0.846	0.794	0.760
		-20			0.931	0.897	0.846	0.794	0.760
		-30				0.897	0.846	0.794	0.760
Heating			5	15	25	35	50	65	75
Height difference H (m)	Indoor Upper than Outdoor	30				0.953	0.929	0.905	0.889
		20			0.968	0.953	0.929	0.905	0.889
		10		0.984	0.968	0.953	0.929	0.905	0.889
		5	1.000	0.984	0.968	0.953	0.929	0.905	0.889
		0	1.000	0.984	0.968	0.953	0.929	0.905	0.889
	Outdoor Upper than Indoor	-5	0.992	0.976	0.961	0.945	0.921	0.898	0.882
		-10		0.968	0.953	0.937	0.914	0.891	0.875
		-20			0.945	0.930	0.907	0.883	0.868
		-30				0.922	0.899	0.876	0.861

4. Noise Criterion Curves

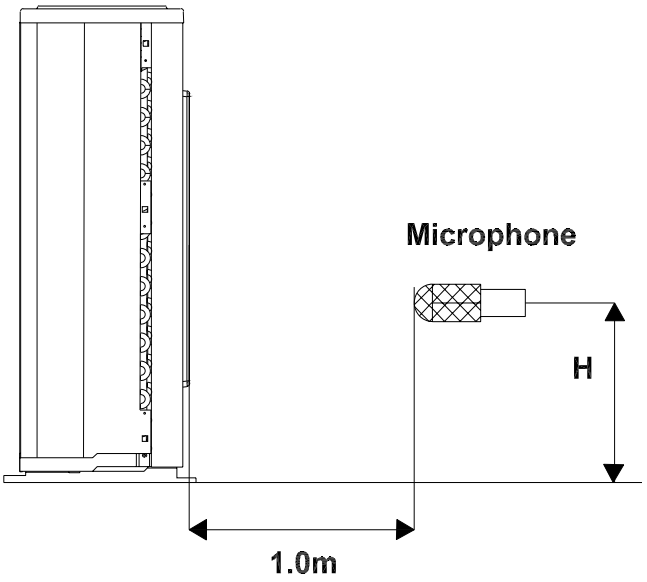

Note: H= 0.5 × height of outdoor unit

Notes:

-Sound measured at 1.0m away from the center of the unit.

-Data is valid at free field condition

-Data is valid at nominal operation condition

-Reference acoustic pressure OdB=20μPa

-Sound level will vary depending on arrange off actors such as the construction (acoustic absorption coefficient) of particular room in which the equipment is installed.

-The operating conditions are assumed to be standard.

YDAX-035H-09M25

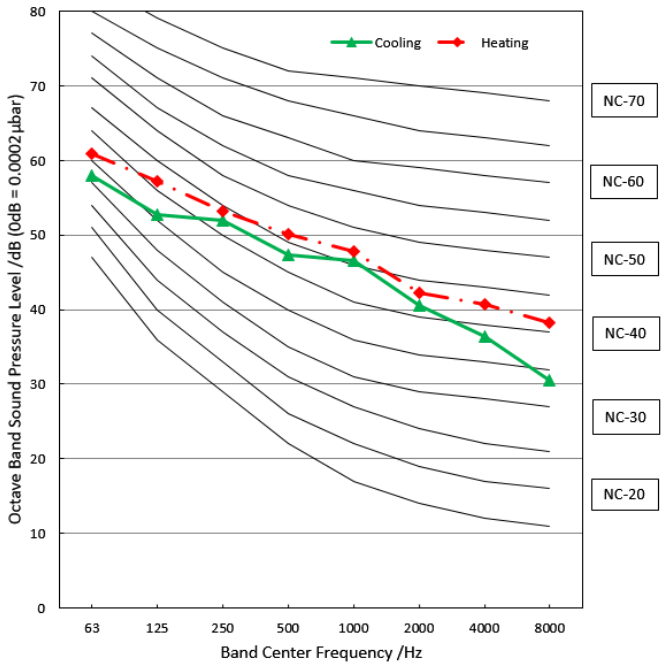

YDAX-050H-09M25

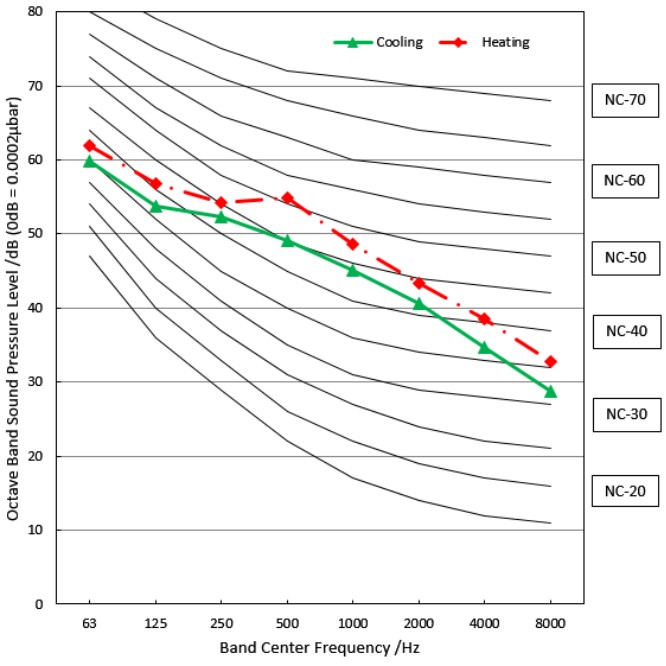

YDAX-070H-09M25

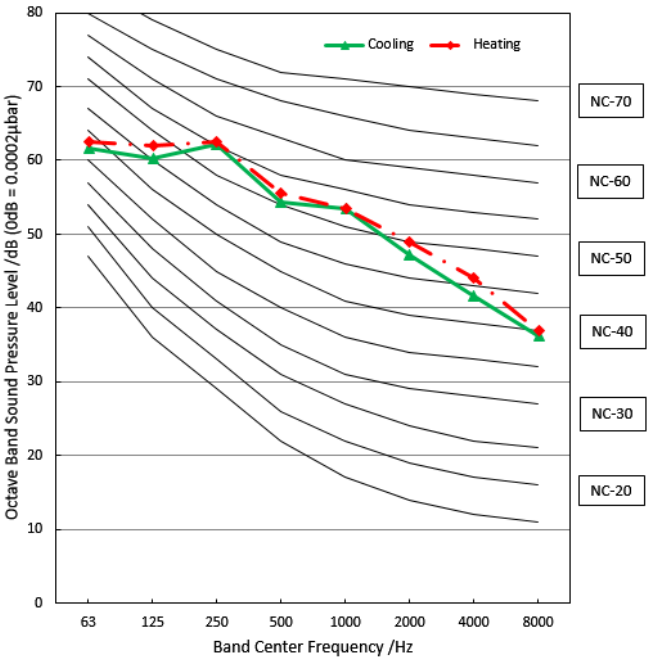

YDAX-100H-09M25

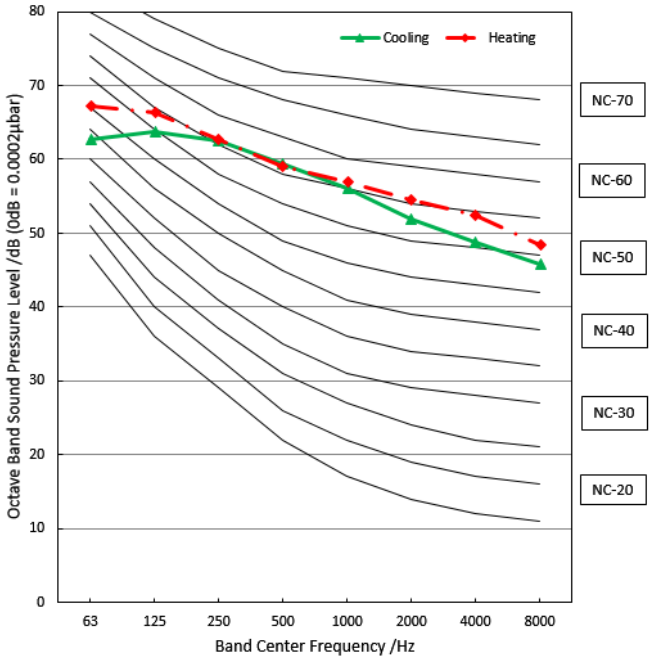

YDAX-100H-09T35

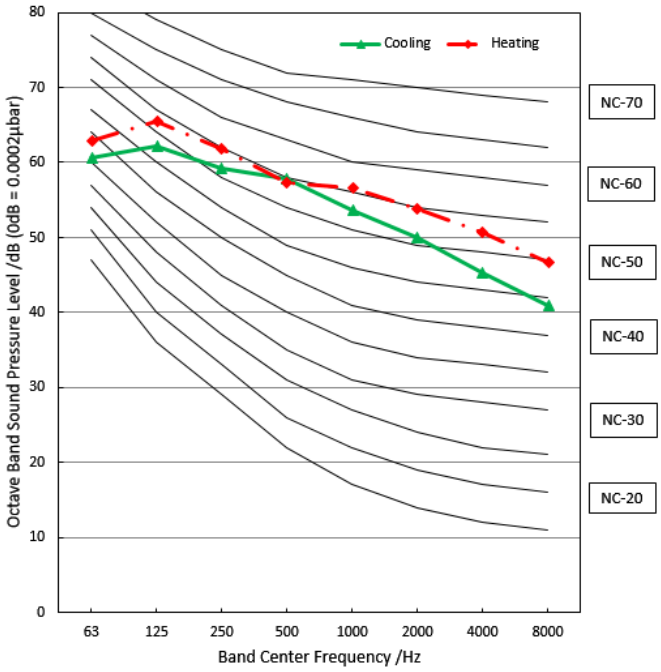

YDAX-140H-09T35

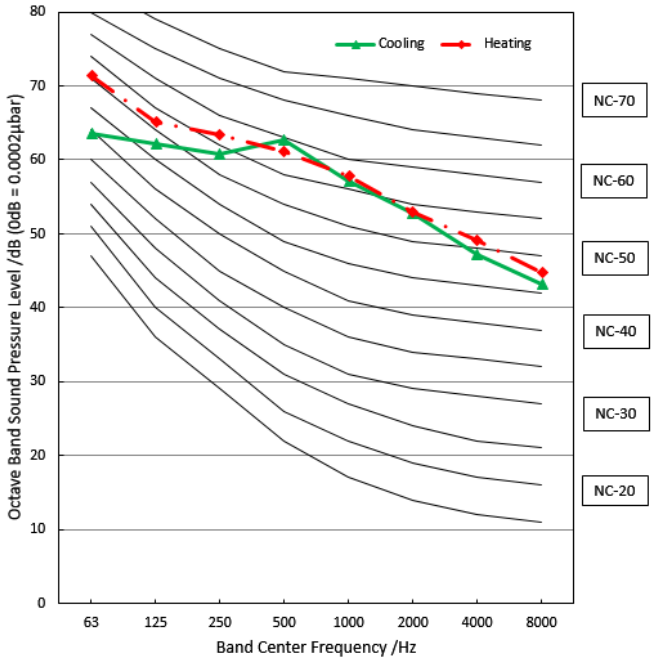

YDAX-175H-09T35

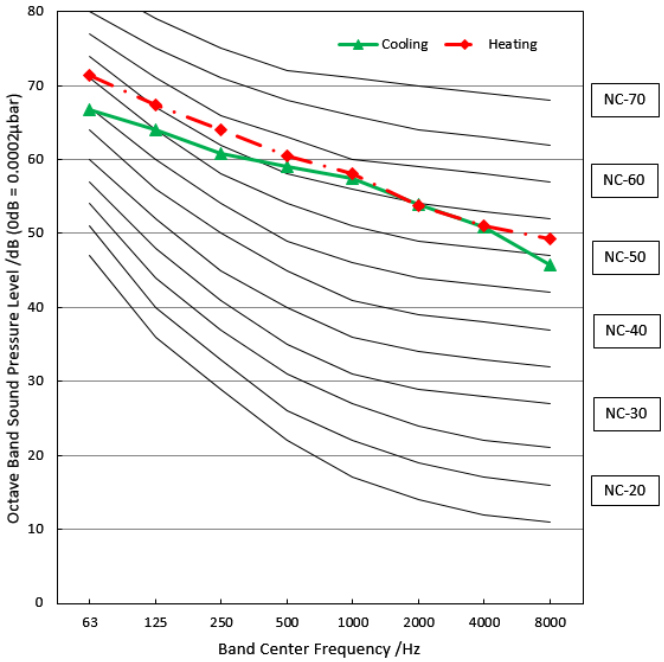

5. Refrigerant Cycle Diagrams

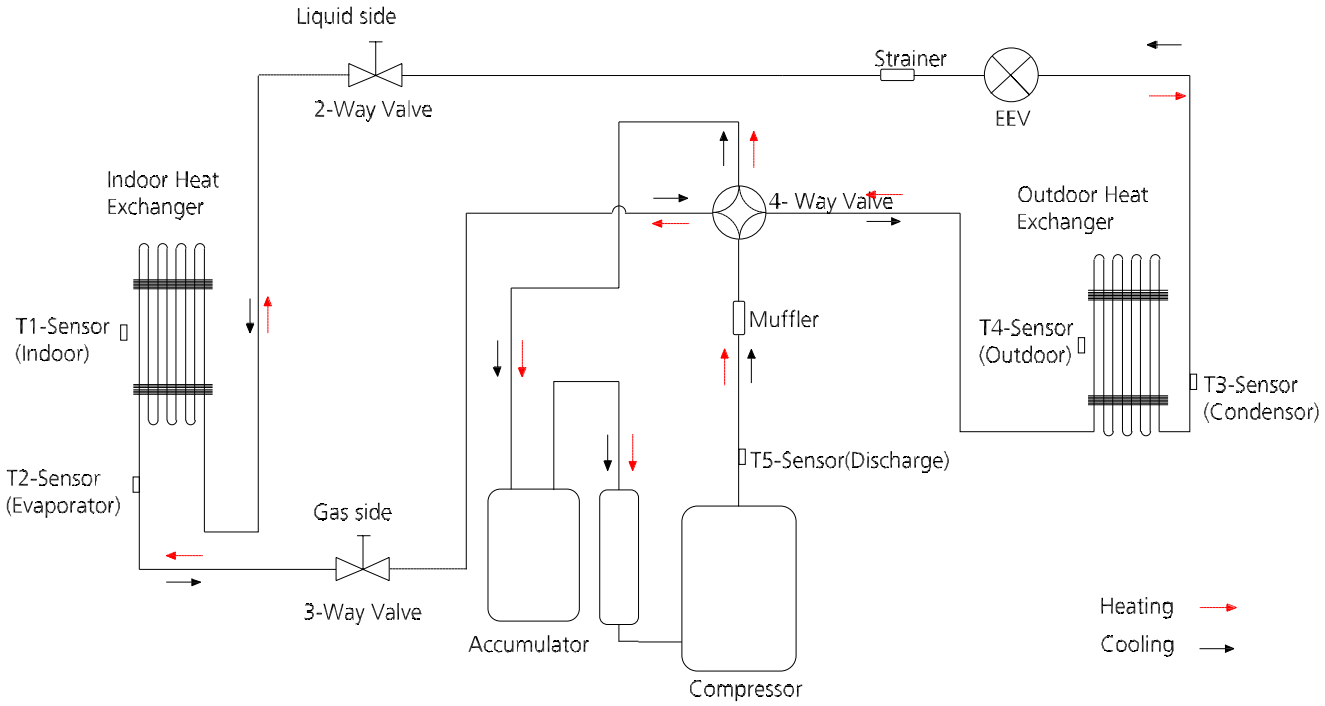

Model	Pipe Size (Diameter:ø) mm(inch)		Piping length (m/ft)		Elevation (m/ft)		Additional Refrigerant
	Gas	Liquid	Rated	Max.	Rated	Max.	
YDAX-035H-09M25	9.52(3/8)	6.35(1/4)	5/16.4	25/82	0	10/32.8	12g/m (0.13oz/ft)
YDAX-050H-09M25	12.7(1/2)	6.35(1/4)	5/16.4	30/98.4	0	20/65.6	

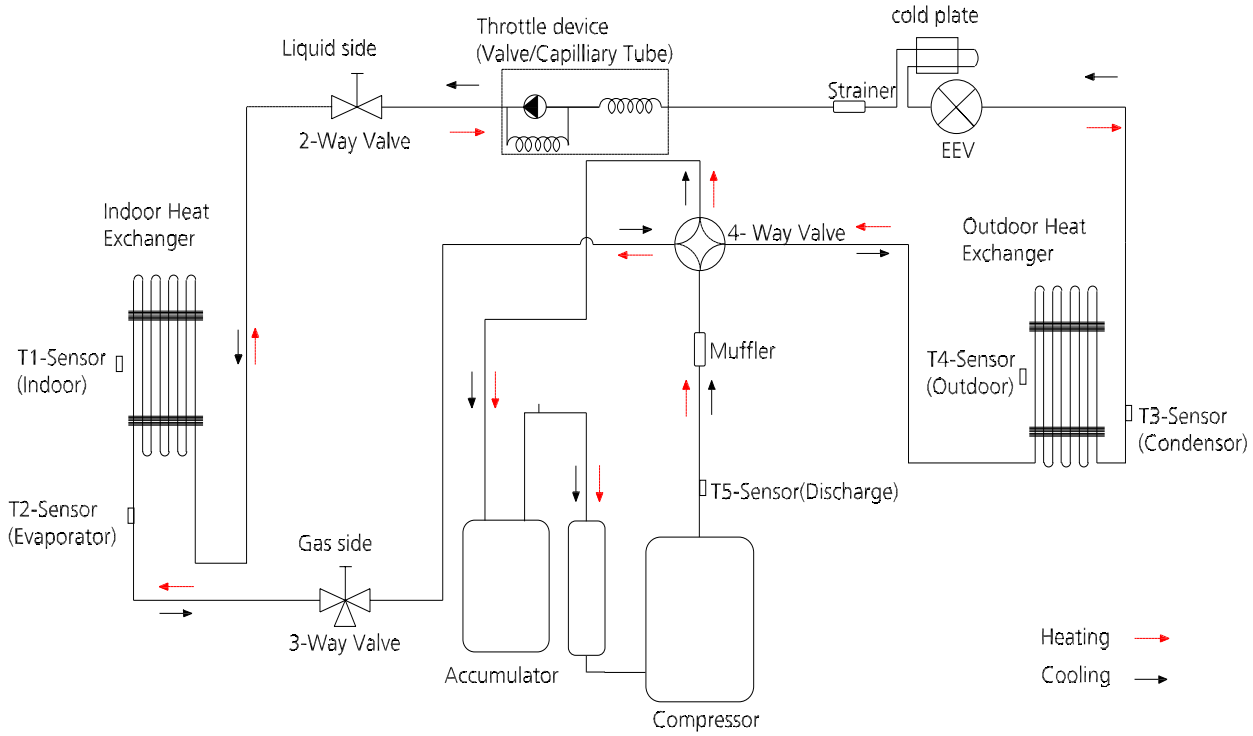

Model	Pipe Size (Diameter:ø) mm(inch)		Piping length (m/ft)		Elevation (m/ft)		Additional Refrigerant
	Gas	Liquid	Rated	Max.	Rated	Max.	
YDAX-070H-09M25	15.9(5/8)	9.52(3/8)	5/16.4	50/164	0	25/82	24g/m (0.26oz/ft)

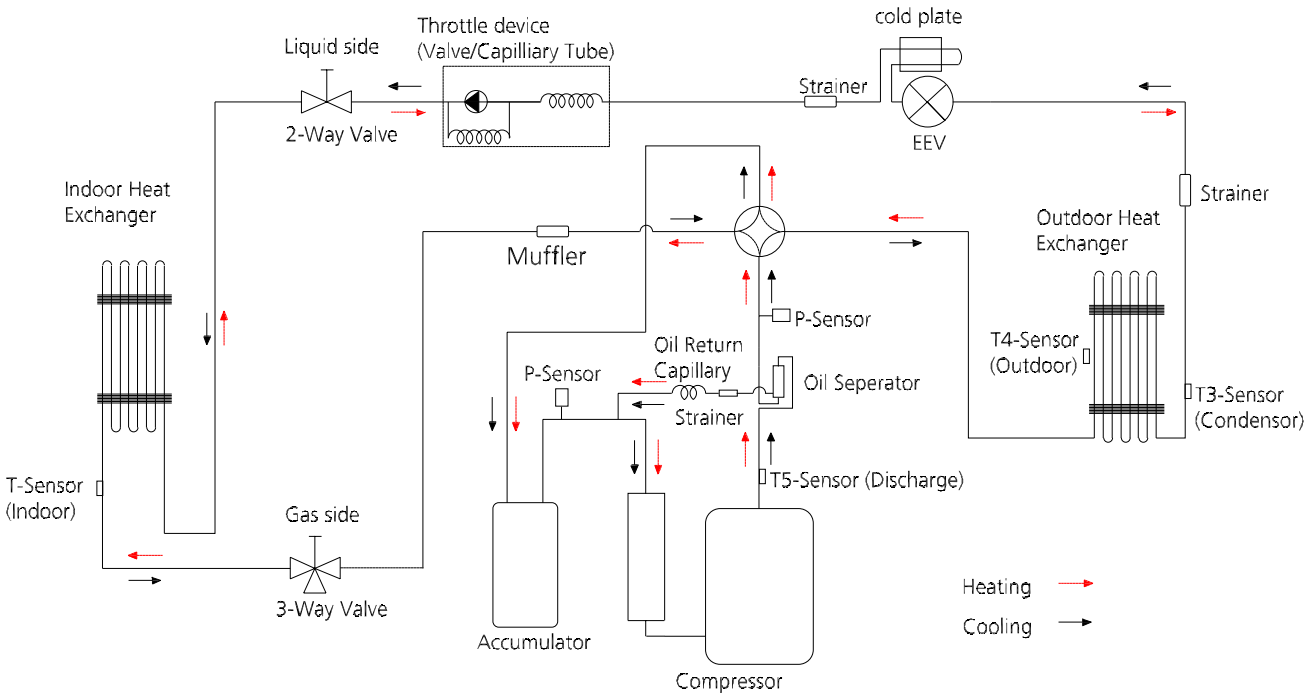

Model	Pipe Size (Diameter:ø) mm(inch)		Piping length (m/ft)		Elevation (m/ft)		Additional Refrigerant
	Gas	Liquid	Rated	Max.	Rated	Max.	
YDAX-100H-09M25	15.9(5/8)	9.52(3/8)	5/16.4	75/246.1	0	30/98.4	24g/m (0.26oz/ft)
YDAX-100H-09T35	15.9(5/8)	9.52(3/8)					
YDAX-140H-09T35	15.9(5/8)	9.52(3/8)					
YDAX-175H-09T35	15.9(5/8)	9.52(3/8)					

6. Electrical Wiring Diagrams

ODU Model	ODU Wiring Diagram	ODU Main Printed Circuit Board	ODU IPM Printed Circuit Board
YDAX-035H-09M25	16022000022493	17122000048121	/
YDAX-050H-09M25		17122000048121	/
YDAX-070H-09M25	16022000020613	17122000048064	/
YDAX-100H-09M25	16022000035289	17122000047742	/
YDAX-100H-09T35	16022000033470	17122000041841	17122000008625
YDAX-140H-09T35	16022000033470	17122000041841	17122000021912
YDAX-175H-09T35		17122000041841	17122000021912

Outdoor unit wiring diagram: 16022000022493

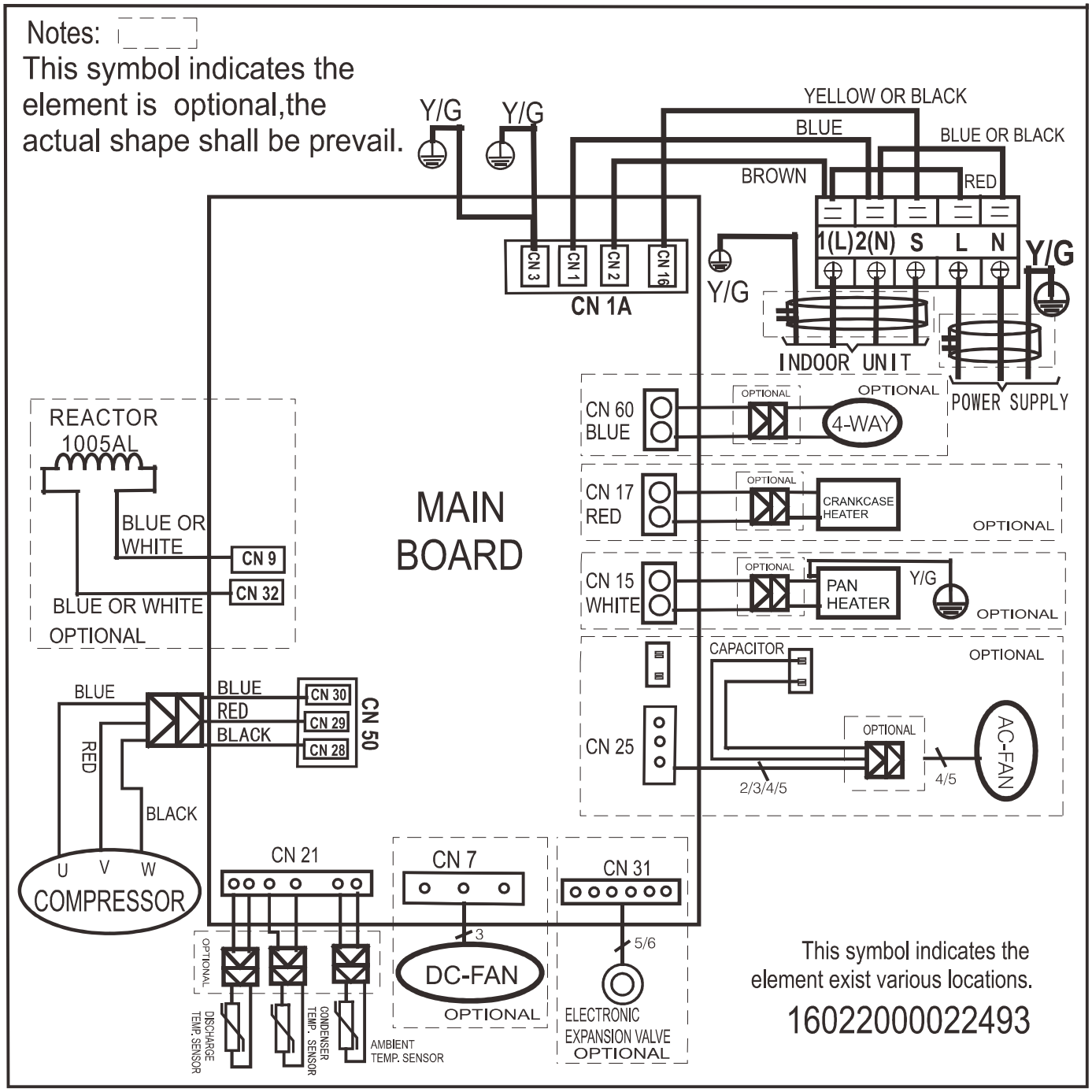

Outdoor unit wiring diagram: 16022000020613

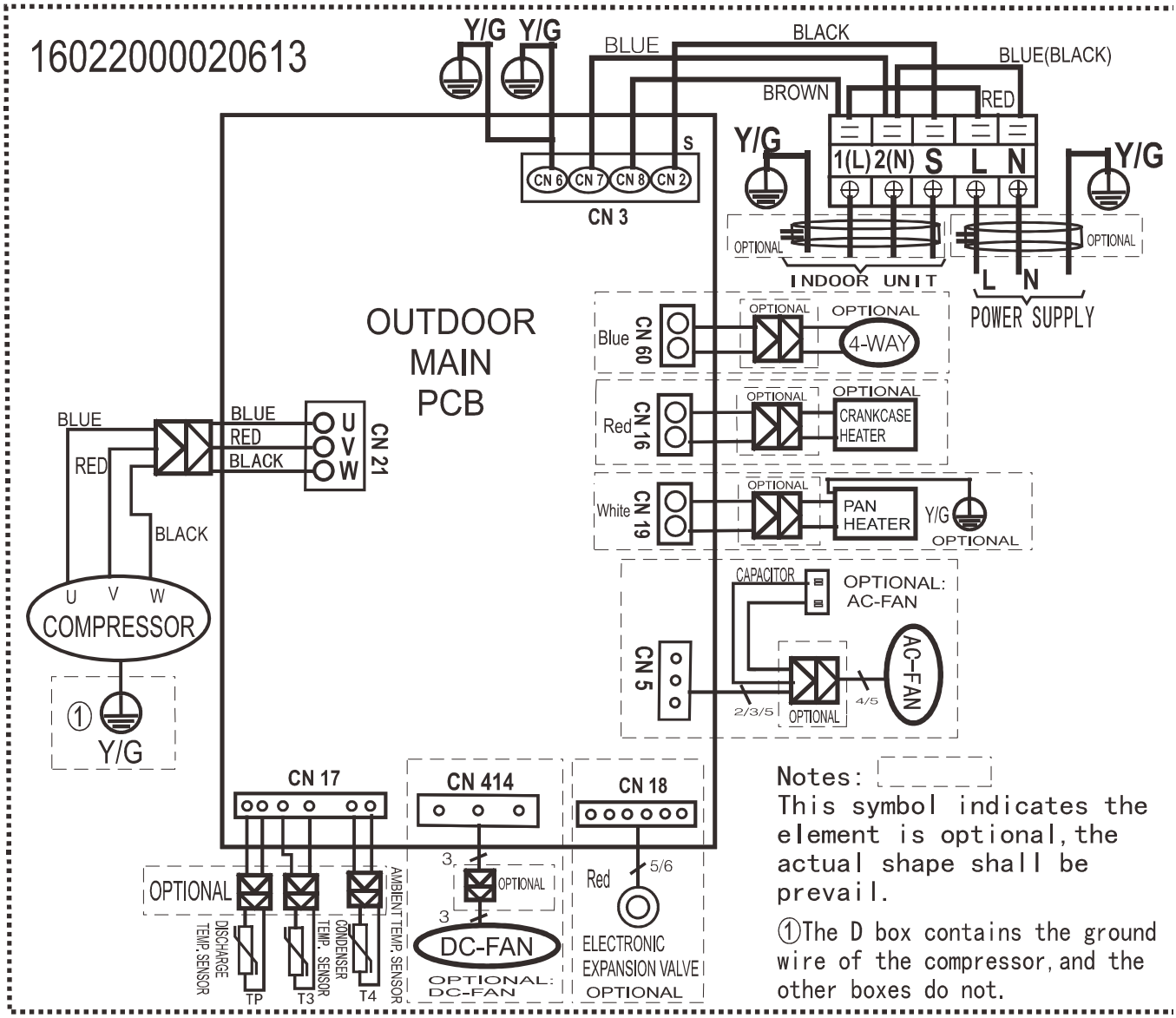

Outdoor unit wiring diagram: 16022000035289

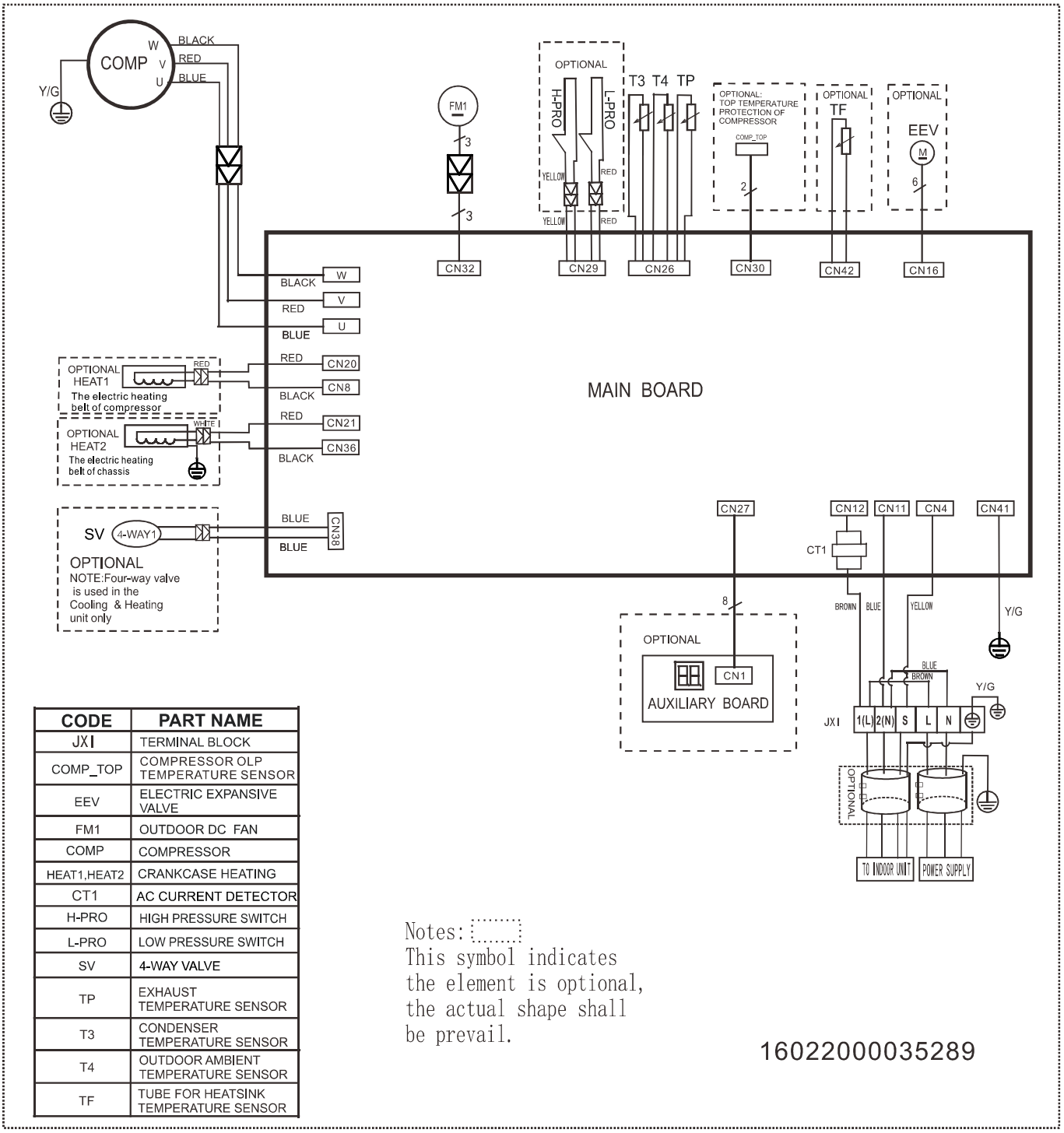

CODE	PART NAME
JXI	TERMINAL BLOCK
COMP_TOP	COMPRESSOR OLP TEMPERATURE SENSOR
EEV	ELECTRIC EXPANSIVE VALVE
FM1	OUTDOOR DC FAN
COMP	COMPRESSOR
HEAT1,HEAT2	CRANKCASE HEATING
CT1	AC CURRENT DETECTOR
H-PRO	HIGH PRESSURE SWITCH
L-PRO	LOW PRESSURE SWITCH
SV	4-WAY VALVE
TP	EXHAUST TEMPERATURE SENSOR
T3	CONDENSER TEMPERATURE SENSOR
T4	OUTDOOR AMBIENT TEMPERATURE SENSOR
TF	TUBE FOR HEATSINK TEMPERATURE SENSOR

Notes:
This symbol indicates the element is optional, the actual shape shall be prevail.

16022000035289

Outdoor unit wiring diagram: 16022000033470

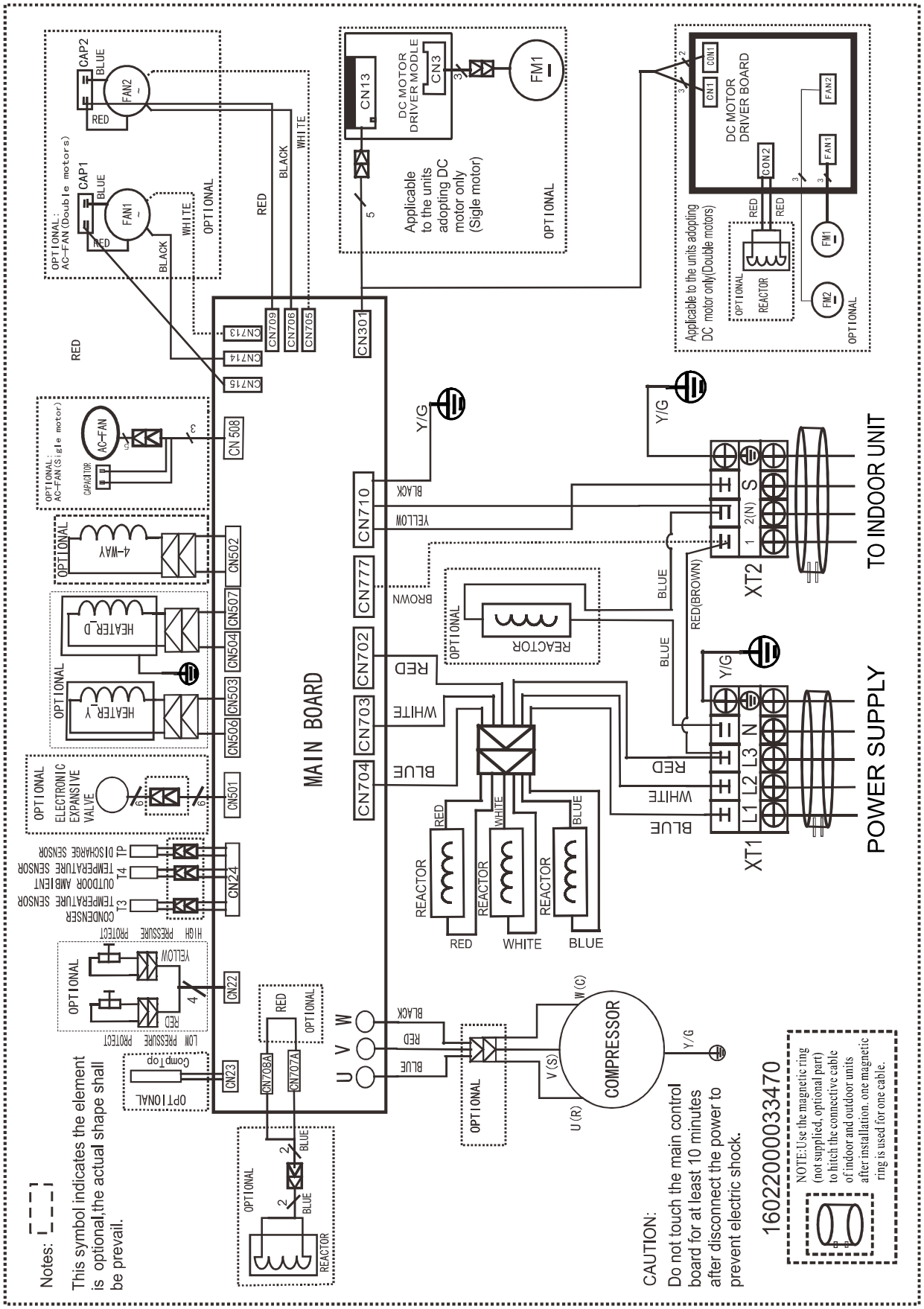

Outdoor unit printed circuit board diagram: 17122000044714, 17122000048121,17122000046453

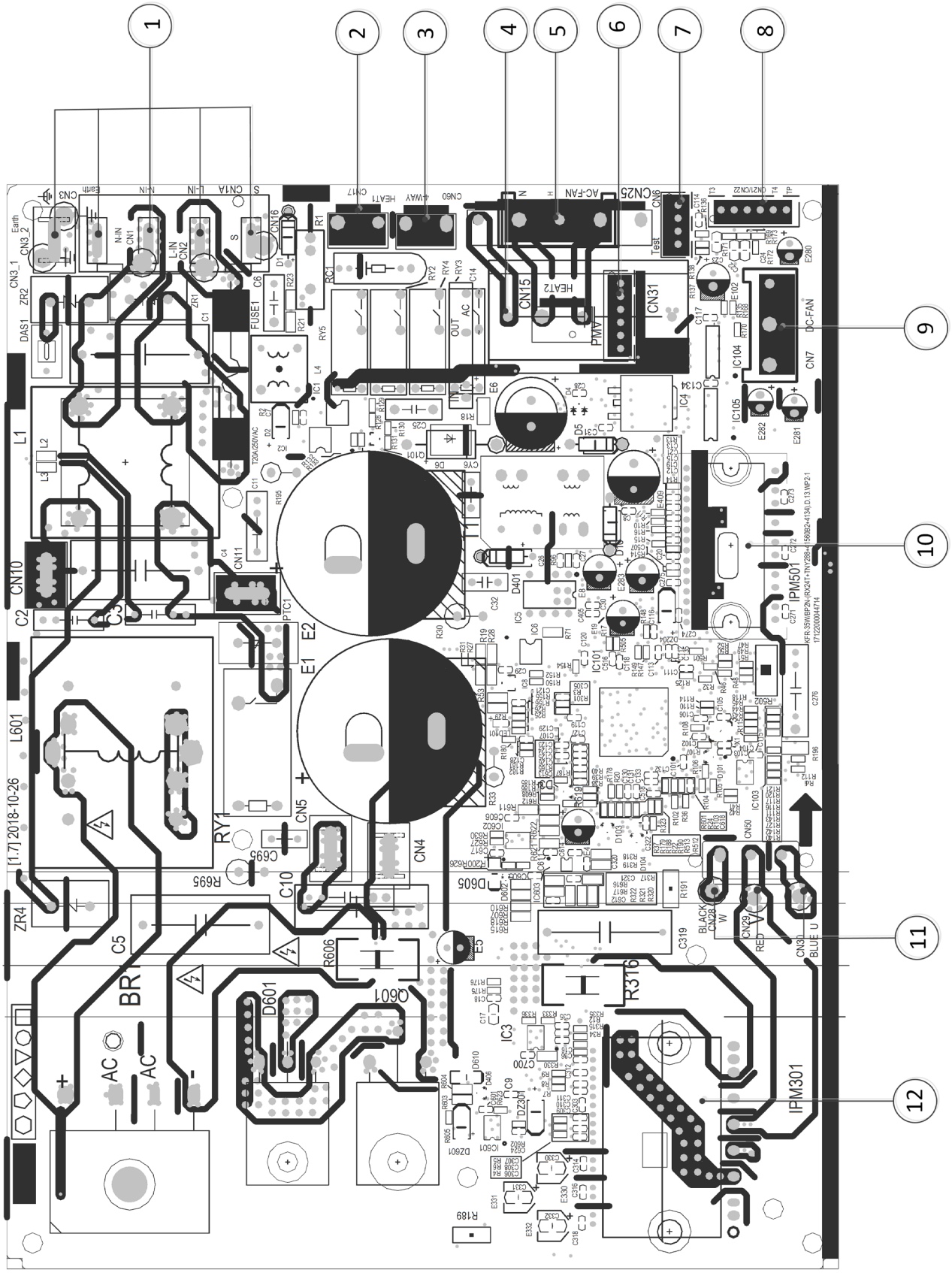

No.	Name	CN#	Meaning
1	CN1A	CN3	Earth: connect to Ground
		CN1	N_in: connect to N-line (208-230V AC input)
		CN2	L_in: connect to L-line (208-230V AC input)
		CN16	S: connect to indoor unit communication
2	HEAT1	CN17	connect to compressor heater, 208-230V AC when is ON
3	4-WAY	CN60	connect to 4 way valve, 208-230V AC when is ON.
4	HEAT2	CN15	connect to chassis heater, 208-230V AC when is ON
5	AC-FAN	CN25	connect to AC fan
6	PMV	CN31	connect to Electric Expansion Valve
7	TESTPORT	CN6	used for testing
8	TP T4 T3	CN21/CN22	connect to pipe temp. sensor T3, ambient temp. sensor T4, exhaust temp. sensor TP
9	DC-FAN	CN7	connect to DC fan
10	FAN_IPM	IPM 501	IPM for DC fan
11	W	CN28	connect to compressor
	V	CN29	0V AC (standby)
	U	CN30	10-200V AC (running)
12	COMP_IPM	IPM 301	IPM for compressor

Note: This section is for reference only. Please take practicality as standard.

Outdoor unit printed circuit board diagram: 17122000048064

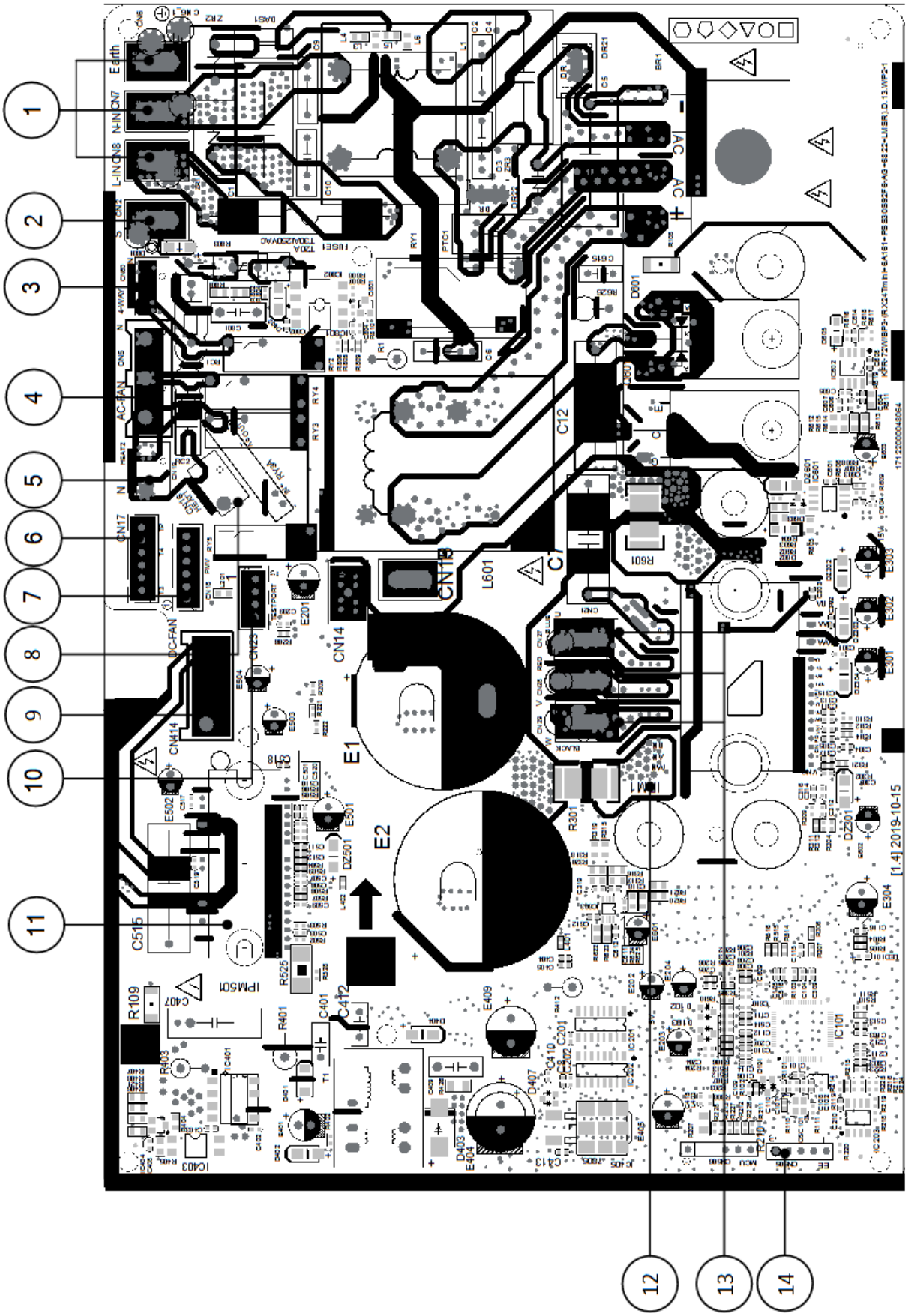

No.	Name	CN#	Meaning
1	Power Supply	CN6	Earth: connect to Ground
		CN7	N_in: connect to N-line (208-230V AC input)
		CN8	L_in: connect to L-line (208-230V AC input)
2	S	CN2	S: connect to indoor unit communication
3	4-WAY	CN60	connect to 4 way valve, 208-230V AC when is ON.
4	AC-FAN	CN5	connect to AC fan
5	HEAT2	CN19	connect to chassis heater, 208-230V AC when is ON
6	TP T4 T3	CN17	connect to pipe temp. sensor T3, ambient temp. sensor T4, exhaust temp. sensor TP
7	PMV	CN18	connect to Electric Expansion Valve
8	HEAT1	CN16	connect to compressor heater, 208-230V AC when is ON
9	DC-FAN	CN414	connect to DC fan
10	TESTPORT	CN23	used for testing
11	FAN_IPM	IPM501	IPM for DC fan
12	COMP_IPM	IPM1	IPM for compressor
13	U	CN27	connect to compressor
	V	CN28	0V AC (standby)
	W	CN29	200-300V AC (running)
14	EE_PORT	CN505	EEPROM programer port

Note: This section is for reference only. Please take practicality as standard.

Outdoor unit printed circuit board diagram: 17122000047742

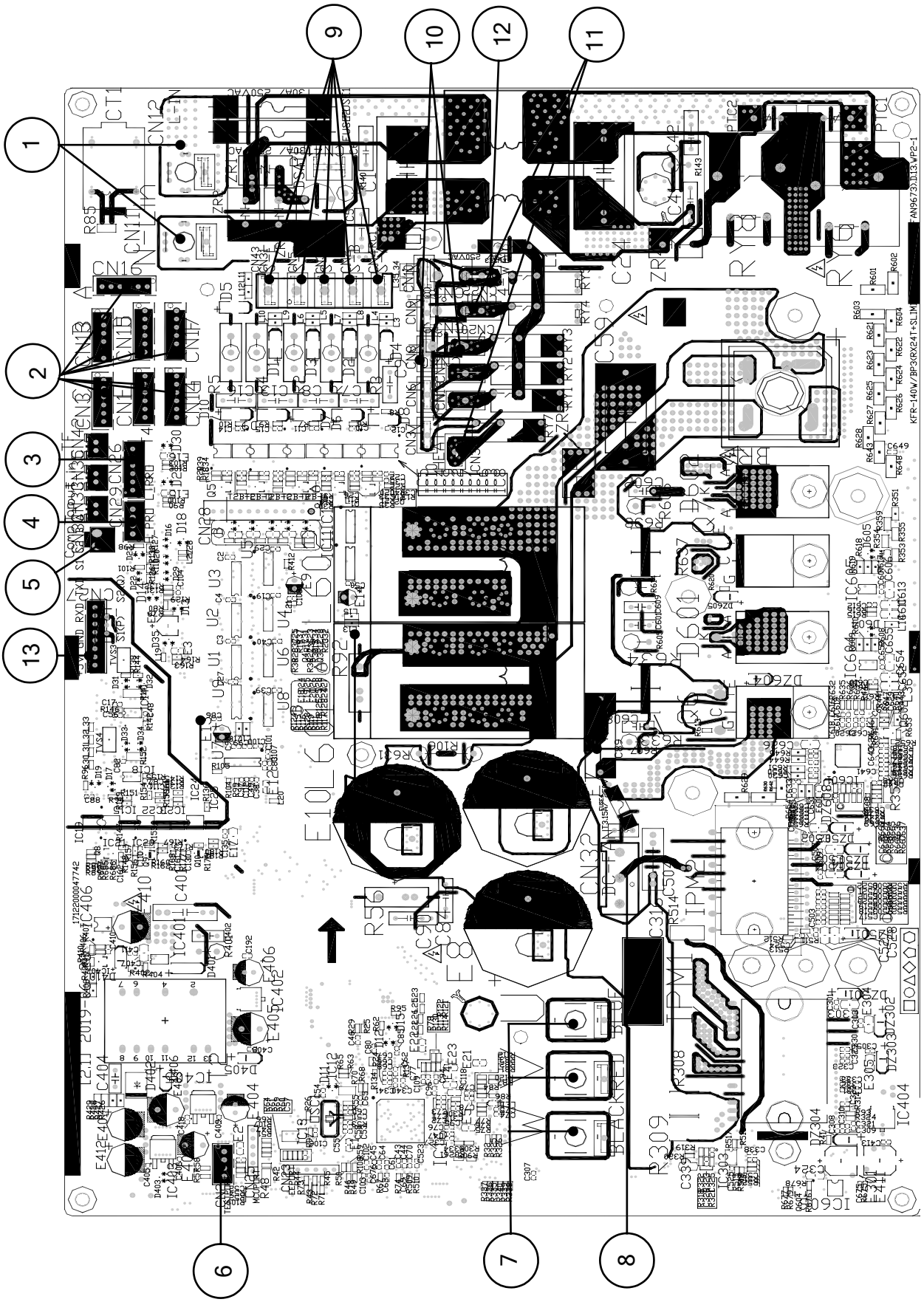

No.	Name	CN#	Meaning
1	Power Supply	CN11	N_in: connect to N-line (208-230V AC input)
		CN12	L_in: connect to L-line (208-230V AC input)
2	EEV-A	CN16	connect to electric expansion valve
	EEV-B	CN13	
	EEV-C	CN3	
	EEV-D	CN15	
	EEV-E	CN1	
	EEV-F	CN17	
	EEV-G	CN14	
3	T3 T4 TP	CN26	connect to pipe temp. sensor T3, ambient temp. sensor T4, exhaust temp. sensor TP
4	H-PRO,L-RPO	CN29	connect to high and low pressure swtich(pin1-pin2&pin3-pin4:5VDC pulse wave)
5	OLP TEMP. SENSOR	CN30	connect to compressor top temp. sensor (5VDC Pulse wave)
6	TESTPORT	CN24	used for testing
7	COMPRESSOR	U	connect to compressor
		V	0V AC (standby)
		W	10-200V AC (running)
8	DC-FAN	CN32	connect to DC fan
9	S-E	CN31	S: connect to indoor unit communication(pin1-pin2: 24VDC Pulse wave; pin2-pin3: 208-230V AC input)
	S-D	CN5	
	S-C(mono)	CN34	
	S-B	CN2	
	S-A	CN4	

No.	Name	CN#	Meaning
10	HEAT_D	CN8	connect to the heater, 208-230V AC when is ON
		CN20	
11	HEAT_Y	CN21	
		CN36	
12	4-WAY	CN38	connect to 4 way valve, 208-230V AC when is ON.
13	/	CN27	connect to key board CN1

Note: This section is for reference only. Please take practicality as standard.

Outdoor unit printed circuit board diagram: 17122000041841

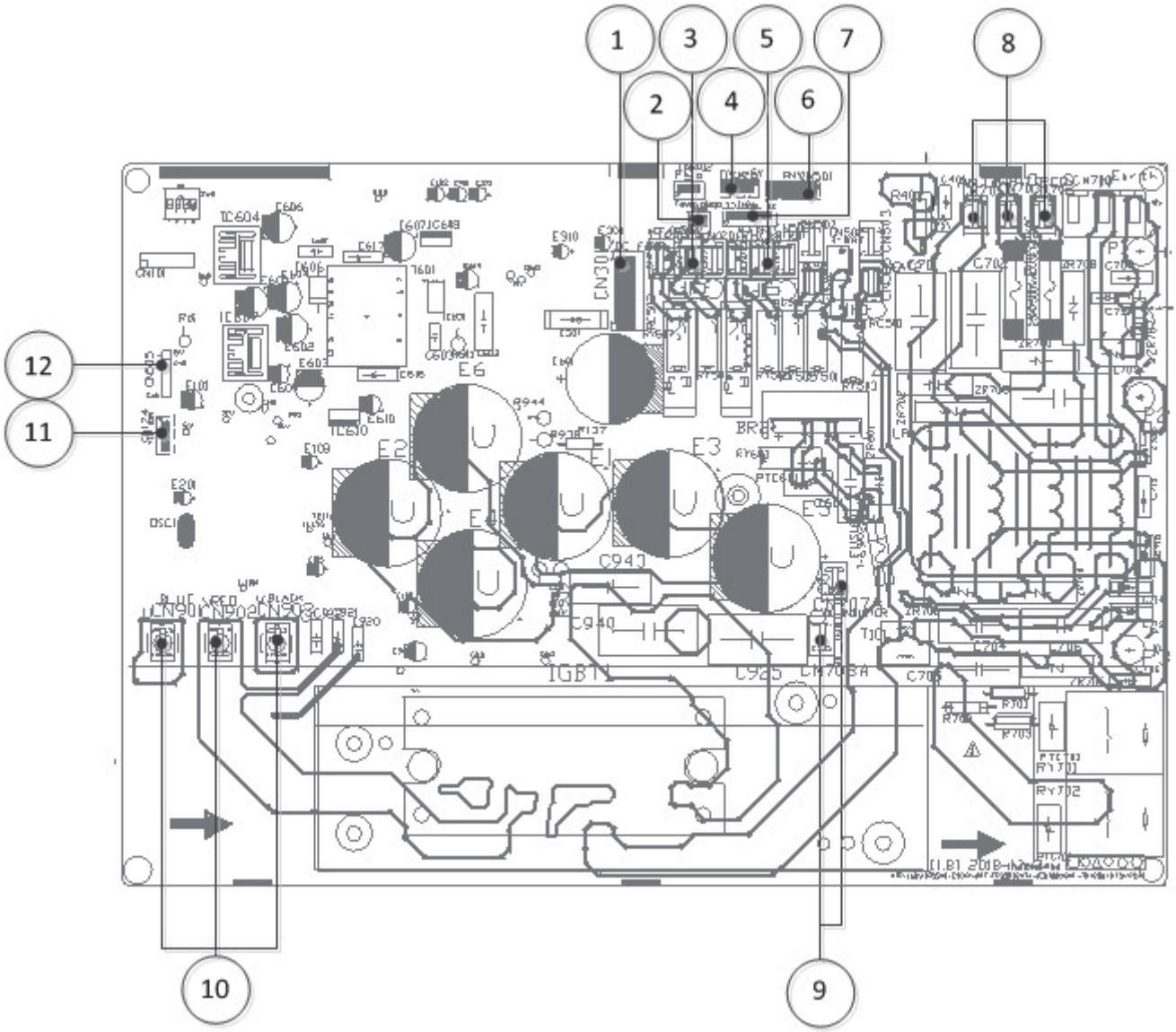

No.	Name	CN#	Meaning
1	CN301	CN301	Connect to DC fan motor
2	CN23	CN23	Connect to Comp Top
3	CN705	CN705	Connect to AC fan motor
	CN706	CN706	Connect to AC fan motor
	CN709	CN709	Connect to AC fan motor
4	CN22	CN22	Connect to high/low pressure protect
5	CN715	CN715	Connect to AC fan motor
	CN714	CN714	
	CN714	CN714	
6	CN501	CN501	Connect to electronic expansive valve
7	CN24	CN24	Connect to condenser temperature, outdoor ambient and discharge sensor
8	CN704	CN704	Power Supply (L1)
	CN703	CN703	Power Supply (L2)
	CN702	CN702	Power Supply (L3)
9	CN708A	CN708A	Connect to reactor
	CN707A	CN707A	
10	U	U	Connect to compressor
	V	V	
	W	W	
11	CN174	CN174	Test port
12	CN505	CN505	EEprom port

Note: This section is for reference only. Please take practicality as standard.

Outdoor unit DC motor driver board diagram: 17122000021912

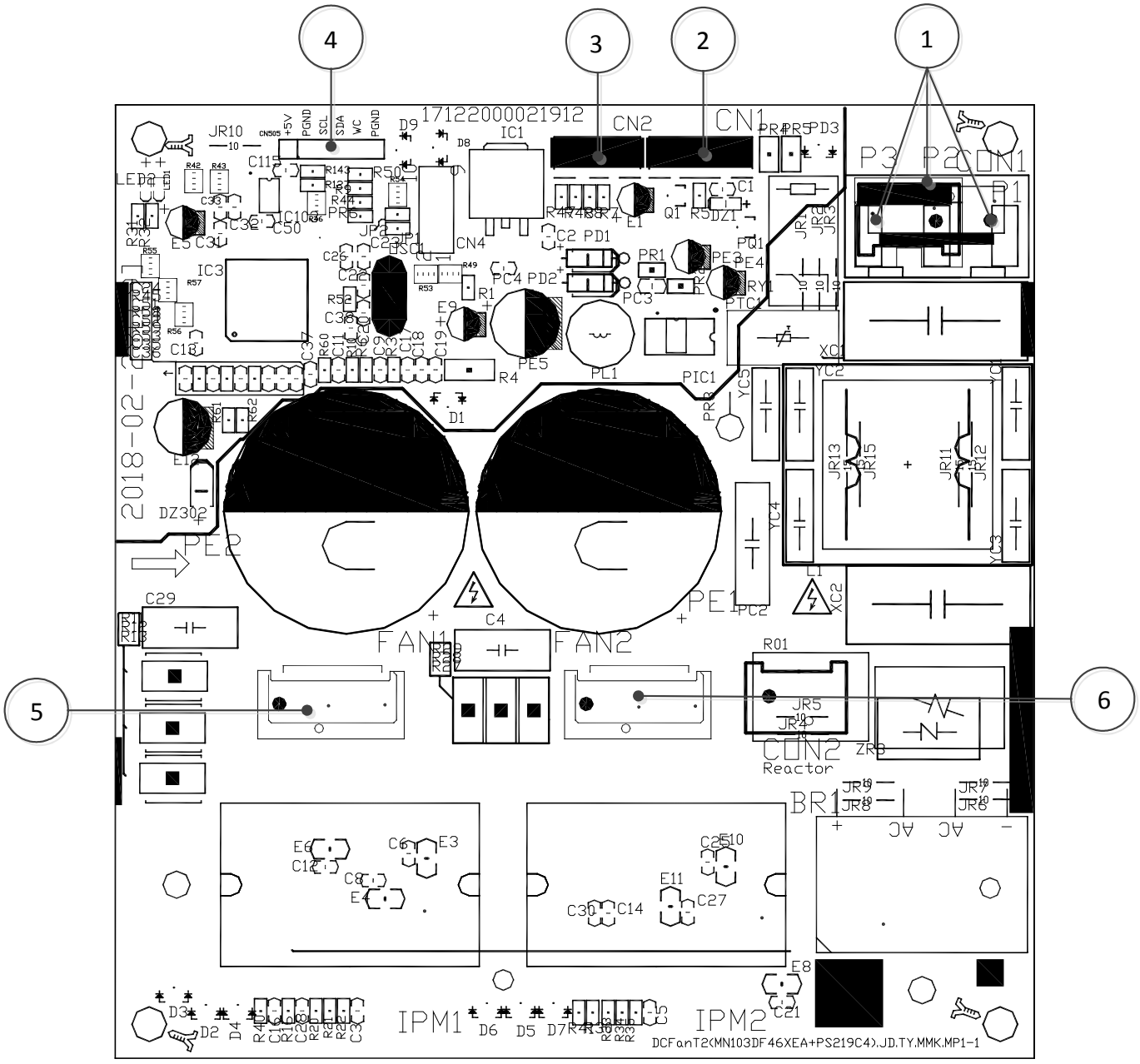

No.	Name	CN#	Meaning
1	POWER	CON1	Power supply 208-230V AC
		P2	
		P3	
2	CN1	CN1	connect to main board
3	TESTPORT	CN2	used for testing
4	CN505	CN505	connect to PC communication
5	FAN1	FAN1	connect to DC fan1
6	FAN2	FAN2	connect to DC fan2

Installation

Contents

1. Installation Overview
2. Location Selection
3. Indoor Unit Installation
4. Outdoor Unit Installation
5. Drainage Pipe Installation
6. Refrigerant Pipe Installation
7. Vacuum Drying and Leakage Checking
8. Additional Refrigerant Charge
9. Engineering of Insulation
10. Engineering of Electrical Wiring
11 Test Operation

1. Installation Overview

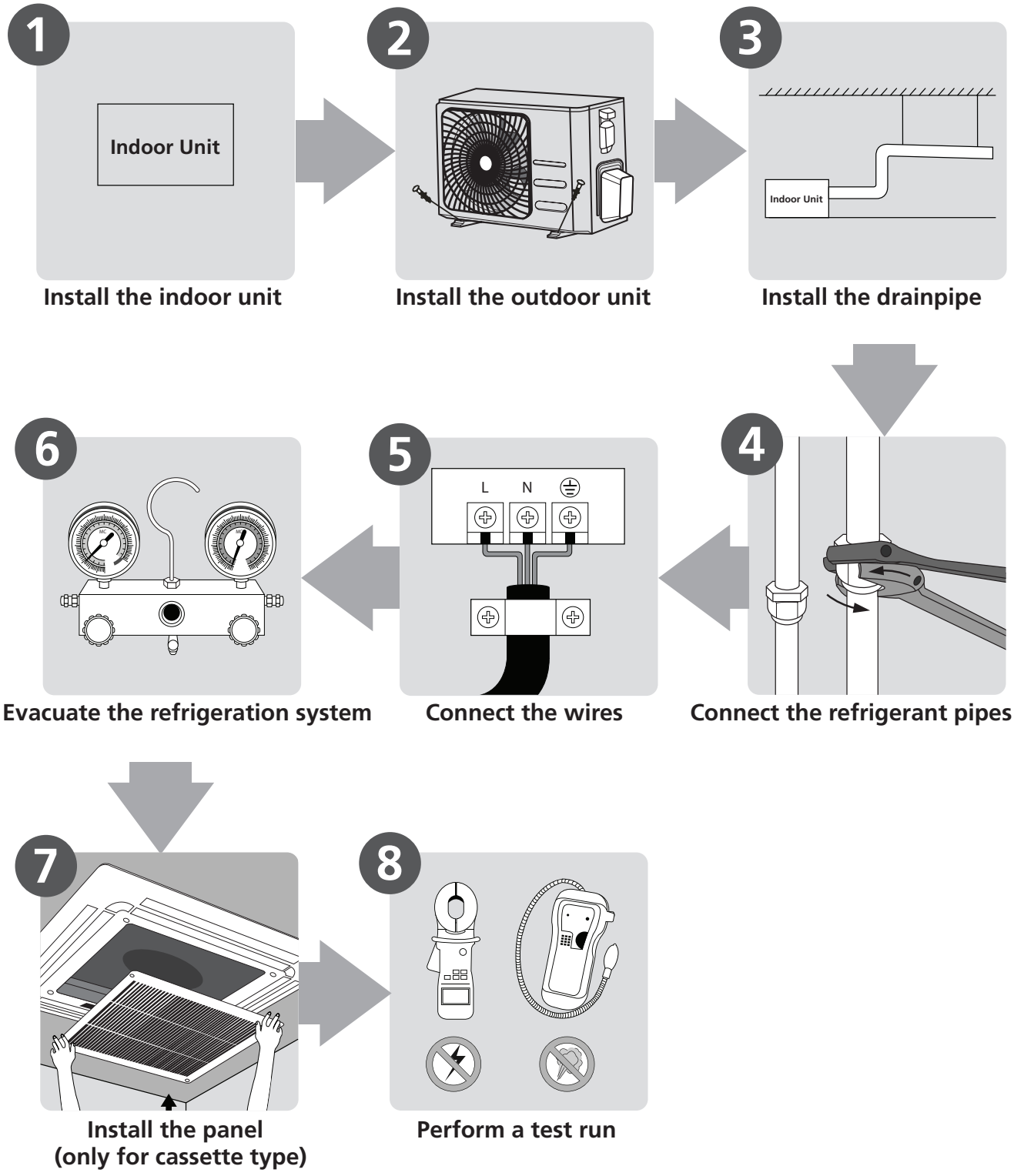

2. Location selection

2.1 Unit location selection can refer to installation manual.

2.2 DO NOT install the unit in the following locations:

- Where oil drilling or fracking is taking place.
- Coastal areas with high salt content in the air.
- Areas with caustic gases in the air, such as near hot springs.
- Areas with power fluctuations, such as factories.
- Enclosed spaces, such as cabinets.
- Areas with strong electromagnetic waves.
- Areas that store flammable materials or gas.
- Rooms with high humidity, such as bathrooms or laundry rooms.
- If possible, DO NOT install the unit where it is exposed to direct sunlight.

2.3 The minimum distance between the outdoor unit and walls described in the installation guide does not apply to airtight rooms. Be sure to keep the unit unobstructed in at least two of the three directions (M, N, P)

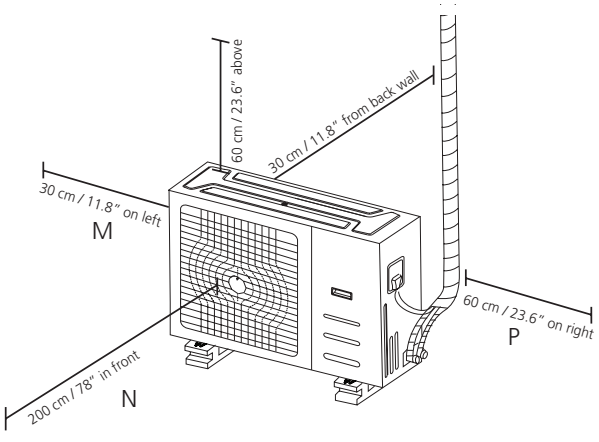

2.4 Rows of series installation

The relations between H, A and L are as follows.

	L	A
L ≤ H	L ≤ 1/2H	25 cm / 9.8" or more
	1/2H < L ≤ H	30 cm / 11.8" or more
L > H	Can not be installed	

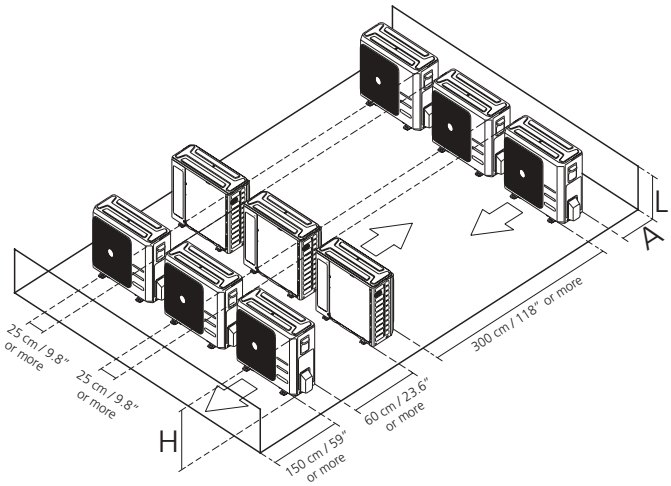

DO NOT install the rows of series like following figure.

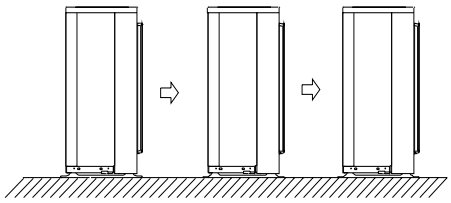

2.5. If the location is exposed to strong winds (for example: near a seaside), the unit must be placed against the wall to shelter it from the wind. If necessary, use an awning.

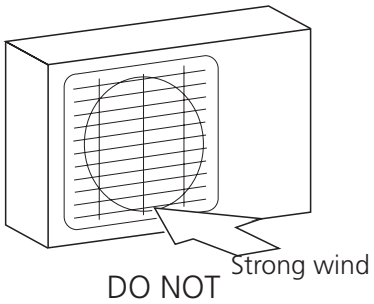

3. Indoor Unit Installation(Console)

3.1 Service space for indoor unit

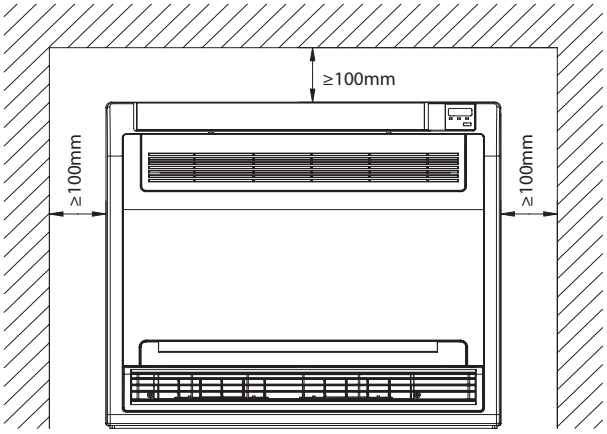

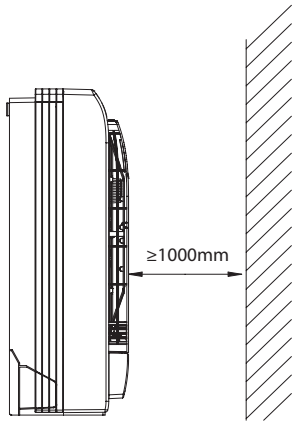

3.2 Bolt Pitch

Ceiling Installation

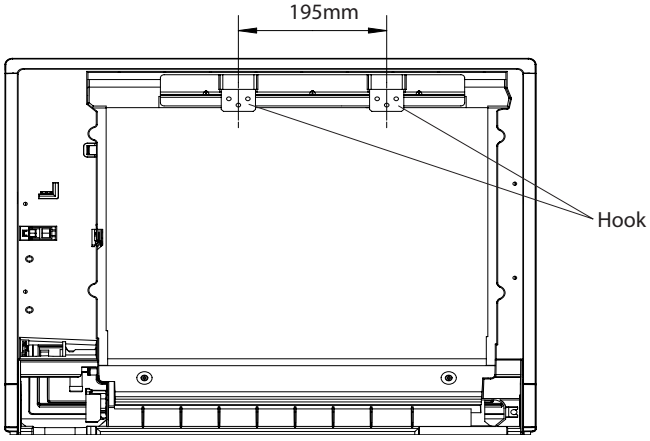

3.3 Installing the main body

1. Affix the hook with a tapping screw onto the wall.

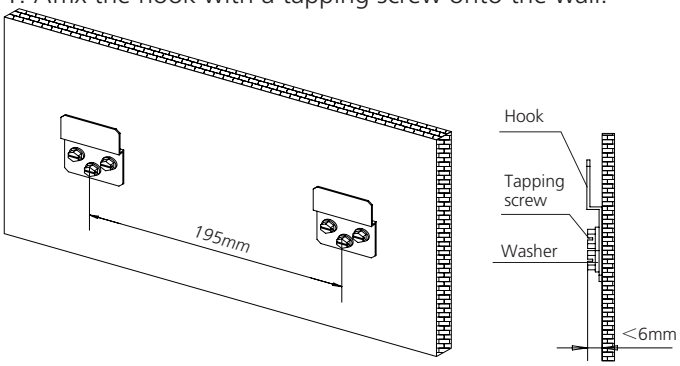

2. Hang the indoor unit on the hook. (The bottom of body can touch the floor or remain suspended, but the body must be installed vertically.)

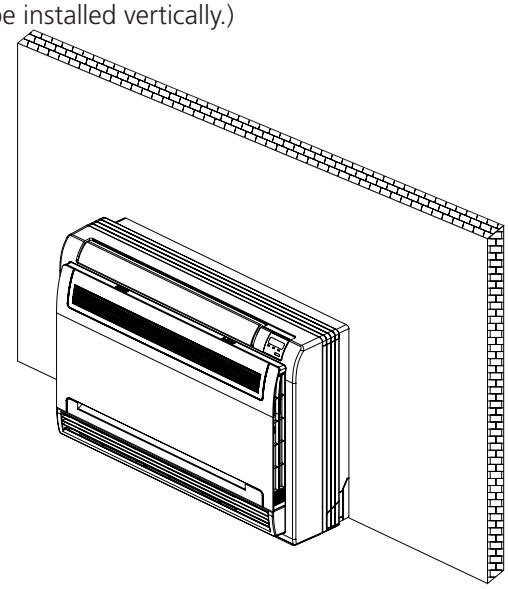

3. Taking the indoor unit apart to connect the pipes

- Open the front panel:
  Slide the two stoppers on the left and right sides inward until they click.

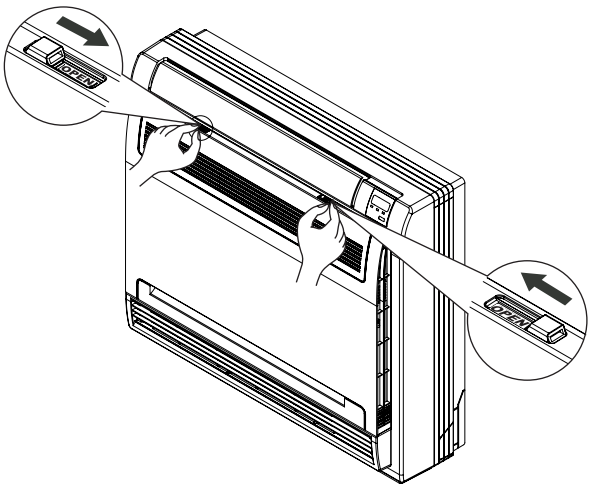

- Remove the front panel.
  Remove the string. Allow the front panel to fall forward and remove it

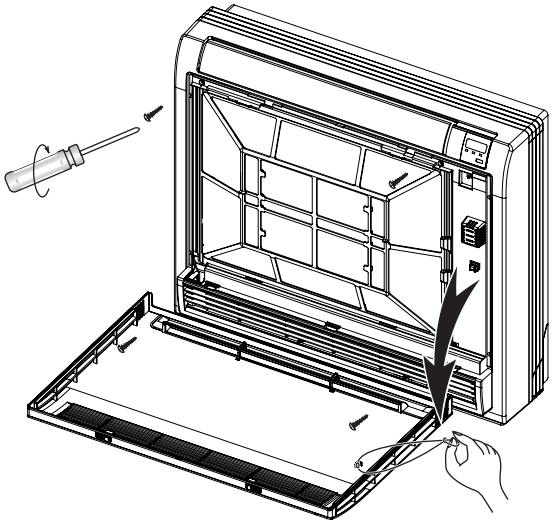

- Remove the face plate.
  Remove the four screws. Open the bottom of the face plate at a 30-degree angle. Lift the top of the face plate.

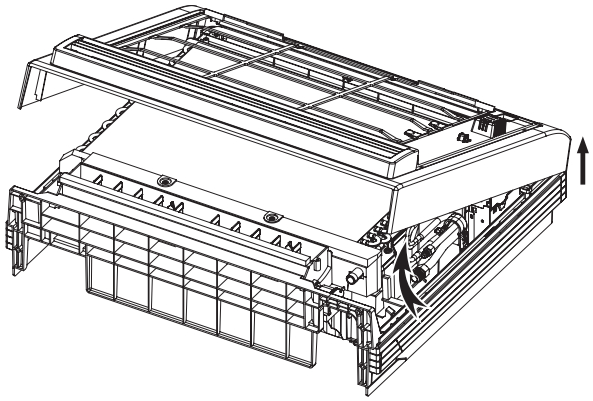

NOTE: All the figures in this manual are for demonstration purposes only. The air conditioner you have purchased may be slightly different in design, though similar in shape.

3. Indoor Unit Installation(Compact Cassette Type)

3.1 Service space for indoor unit

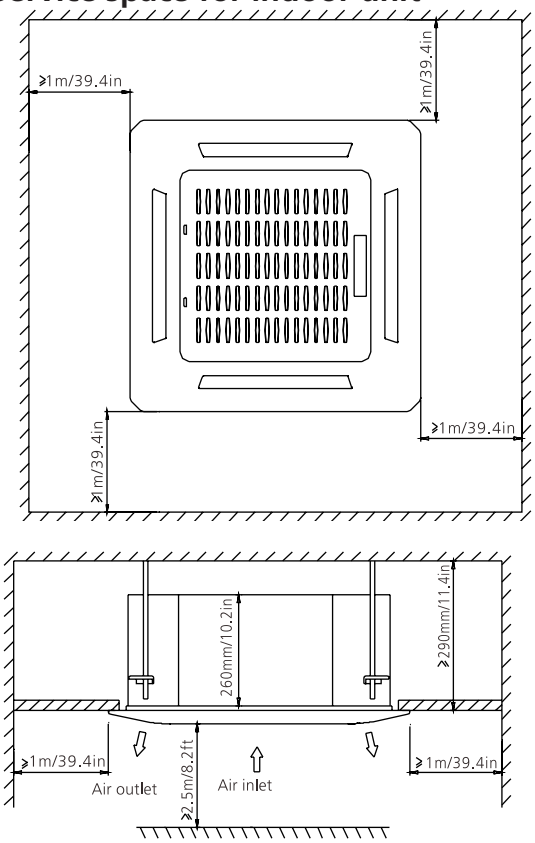

3.2 Hang Indoor Unit

1. Use the included paper template to cut a rectangular hole in the ceiling, leaving at least 1m (39.4") on all sides. The cut hole size should be 4cm(1.6") larger than the body size.

Be sure to mark the areas where ceiling hook holes will be drilled.

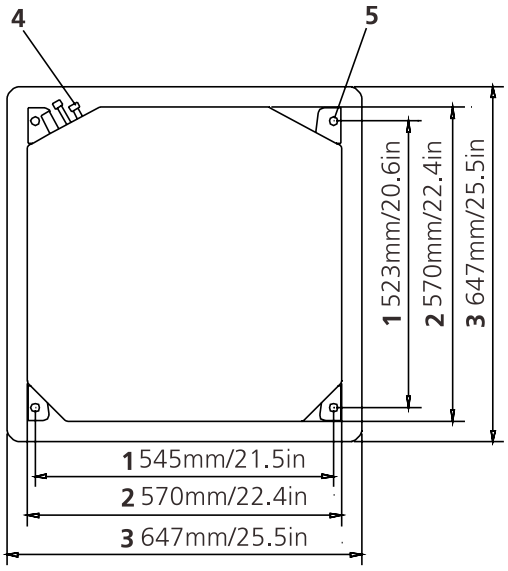

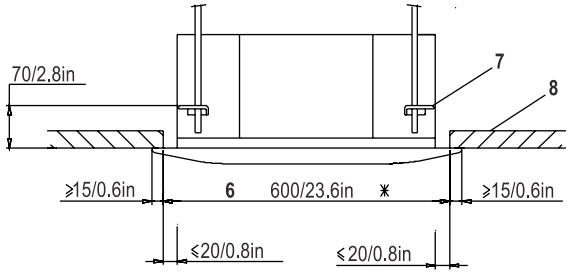

1 Suspension bolt pitch dimensions
2 Body dimensions
3 Decoration panel dimensions
4 Refrigerant piping
5 Suspension bolt (×4)
6 Ceiling opening dimensions
7 Hanger bracket
8 Ceiling board

2. Drill 4 holes 5cm (2") deep at the ceiling hook positions in the internal ceiling. Be sure to hold the drill at a 90° angle to the ceiling.
3. Using a hammer, insert the ceiling hooks into the pre-drilled holes. Secure the bolt using the included washers and nuts.
4. Install the four suspension bolts



5. Mount the indoor unit. You will need two people to lift and secure it. Insert suspension bolts into the unit's hanging holes. Fasten them using the included washers and nuts

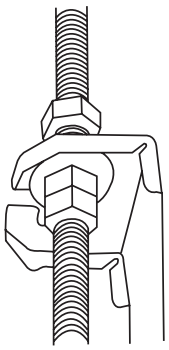

Adjust the position to ensure the gaps between the indoor

unit and the four sides of false ceiling are even. The bottom of the unit should be 24mm / 0.9in higher than ceiling board. Generally, L should be half the length of the suspension bolt or long enough to prevent the nuts from coming off.

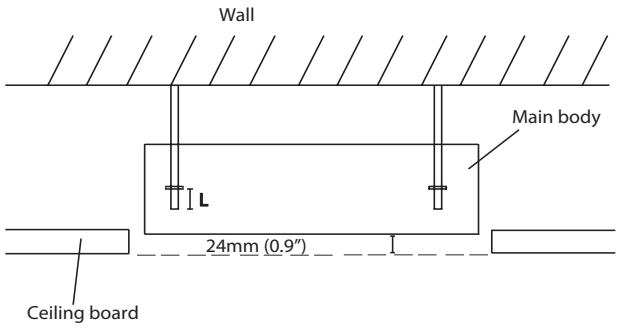

CAUTION:

Ensure that the unit is completely level.

The unit is equipped with a built-in drain pump and float switch. If the unit is tilted against the direction of condensate flows (the drainpipe side is raised), the float switch may malfunction and cause water to leak.

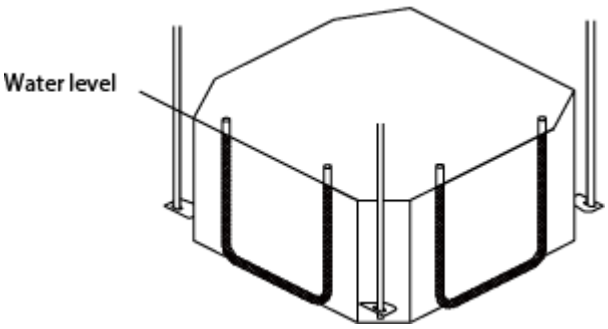

NOTE FOR NEW HOME INSTALLATION

When installing the unit in a new home, the ceiling hooks can be embedded in advance. Make sure that the hooks do not come loose due to concrete shrinkage. After installing the indoor unit, fasten the installation paper template onto the unit with bolts (M6X12) to determine in advance the dimension and position of the opening on the ceiling. Follow the instructions above for the remainder of the installation.

3.3 Compact Cassette Panel Installation

3.3.1 Remove the front grille

1. Slide the 2 grille hooks toward the middle of the decoration panel.

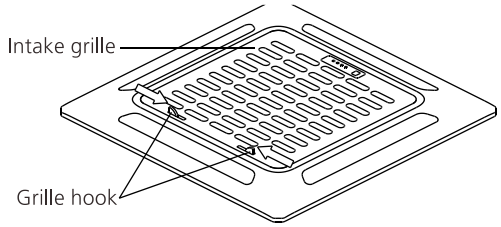

2. Hold the grille at a 45° angle, lift it up slightly and detach it from the main body.

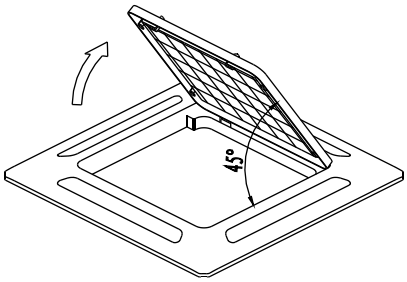

3.3.2 Install the panel

1. Align the indicate "△" on the decoration panel to the indicate "△" on the unit .

2. Attach the decoration panel to the unit with the supplied screws as shown in figure below.

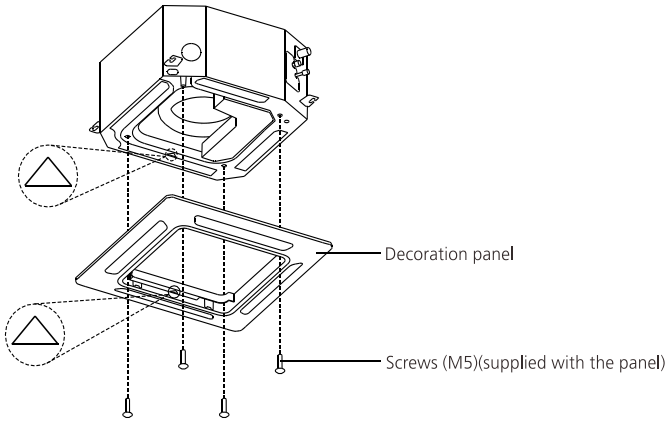

3. After installing the panel, ensure that there is no space between the unit body and decoration panel. Otherwise air may leak through the gap and cause dewdrop.

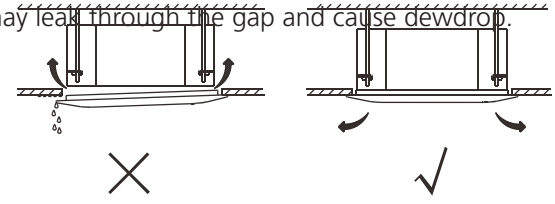

3.3.3 Mount the grille

Ensure that the buckles at the back of the grille be properly seated in the groove of the panel.

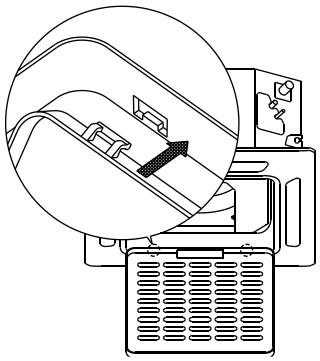

3.3.4 Connect the two wires of the panel to the main board of the unit.

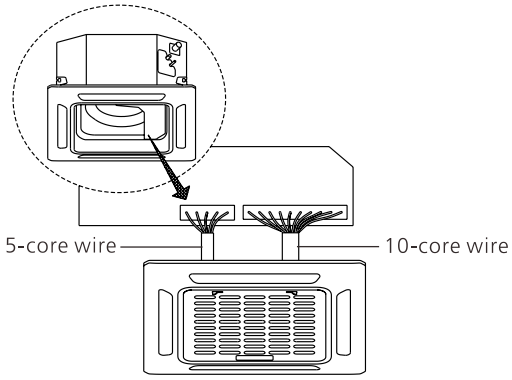

3.3.5 Fasten the control box lid with two screws .

3.3.6 Close the front grille, and close the two grille hooks.

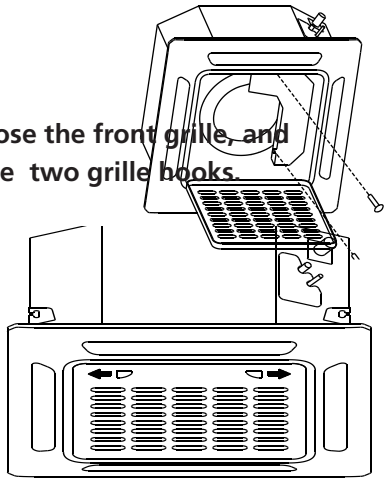

3. Indoor Unit Installation(Super-slim Cassette Type)

3.1 Service space for indoor unit

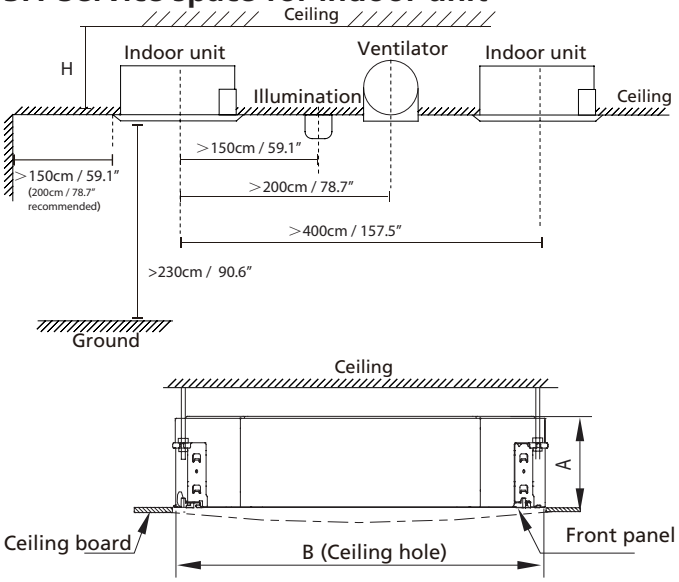

Capacity (kBtu/h)	A(mm/inch)	H(mm/inch)	B(mm/inch)
24	205/8.07	>230/9.06	900/35.4
30/36	245/9.65	>271/10.7	
42~55	287/11.3	>313/12.3	

3.2 Hang Indoor Unit

1. Use the included paper template to cut a rectangular hole in the ceiling, leaving at least 1m (39.4") on all sides. The cut hole size should be 4cm(1.6") larger than the body size.

Be sure to mark the areas where ceiling hook holes will be drilled.

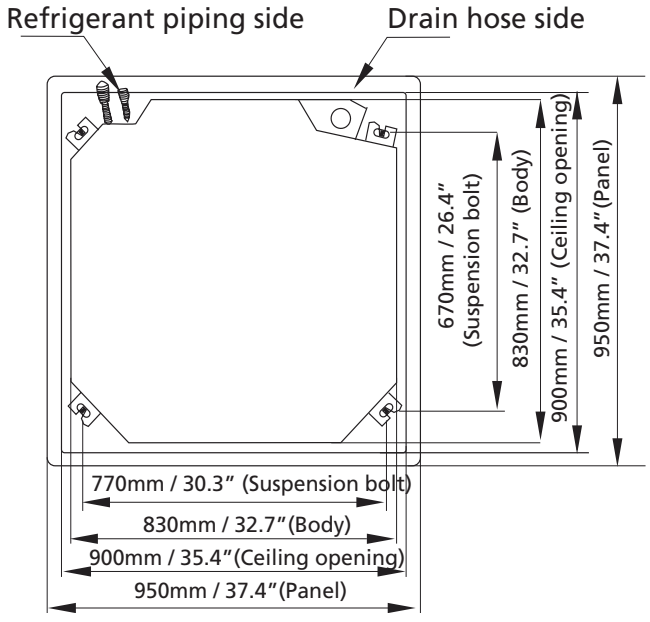

2. Drill 4 holes 12cm-15.5cm (4.7"-6.1") deep at the ceiling hook positions in the internal ceiling. Be sure to hold the drill at a 90° angle to the ceiling.
3. Using a hammer, insert the ceiling hooks into the pre-drilled holes. Secure the bolt using the included washers and nuts.
4. Install the four suspension bolts



5. Mount the indoor unit. You will need two people to lift and secure it. Insert suspension bolts into the unit's hanging holes. Fasten them using the included washers and nuts

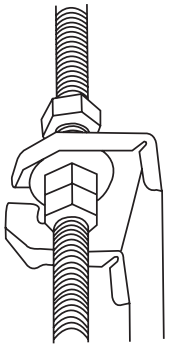

Adjust the position to ensure the gaps between the indoor unit and the four sides of false ceiling are even. The bottom of the unit should be 10 - 25mm (0.4-0.98") higher than ceiling board. Generally, L should be half the length of the suspension bolt or long enough to prevent the nuts from coming off.

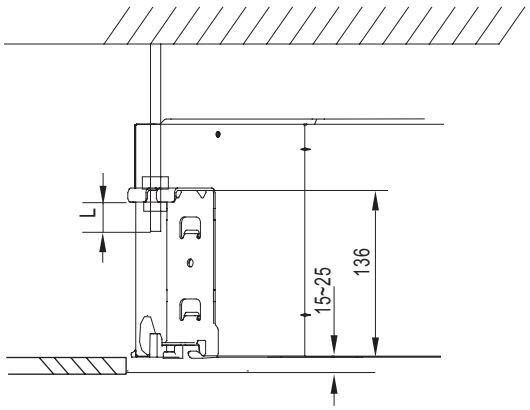

CAUTION:

Ensure that the unit is completely level.

The unit is equipped with a built-in drain pump and float switch. If the unit is tilted against the direction of condensate flows (the drainpipe side is raised), the float switch may malfunction and cause water to leak.

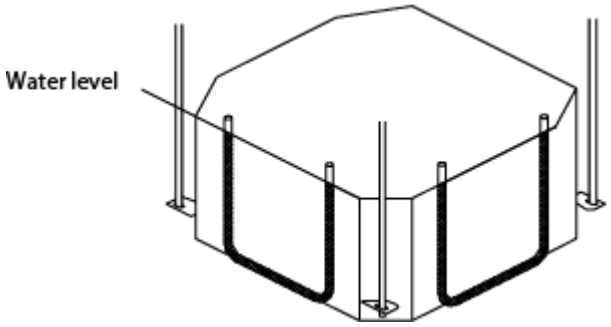

NOTE FOR NEW HOME INSTALLATION

When installing the unit in a new home, the ceiling hooks can be embedded in advance. Make sure that the hooks do not come loose due to concrete shrinkage. After installing the indoor unit, fasten the installation paper template onto the unit with bolts (M6X12) to determine in advance the dimension and position of the opening on the ceiling. Follow the instructions above for the remainder of the installation.

3.3 Panel Installation of Super-slim Cassette

3.3.1 Remove the front grille

1.Push one side of the grille screw cover then remove the grid screw.

2. Push both of the tabs towards the middle simultaneously to unlock the hook on the grille.

3. Hold the grille at a 45° angle, lift it up slightly and detach it from the main body

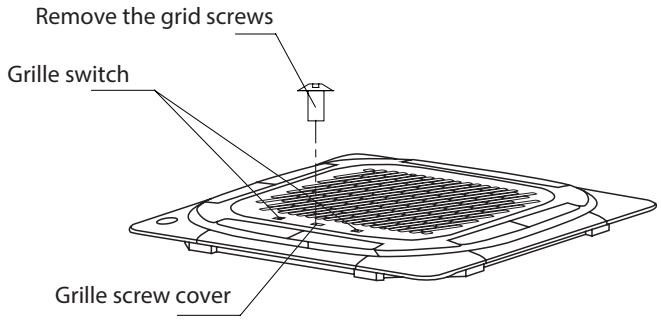

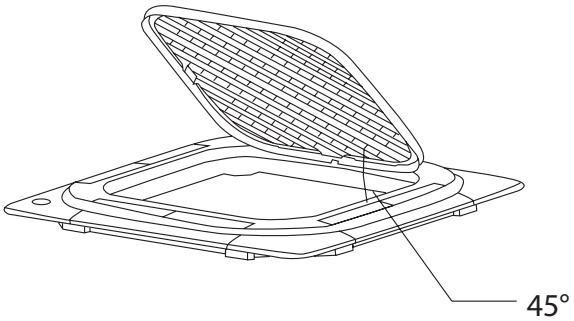

3.3.2 Remove the installation covers at the four corners by sliding them outwards.

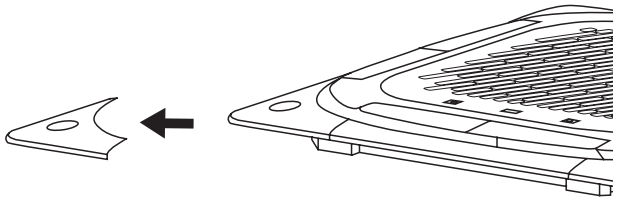

3.3.3 Install the panel

1. Align the front panel to the main body, taking into account the position of the piping and drain sides. Hang the four latches of the decorative panel to the hooks of the indoor unit. Tighten the panel hook screws evenly at the four corners.

Note: Tighten the screws until the thickness of the sponge between the main body and the panel reduces to 4-6mm (0.2-0.3”). The edge of the panel should be in contact with the ceiling well.

2. Adjust the panel by turning it to the direction of arrow shown in figure below so that the ceiling opening is completely covered.

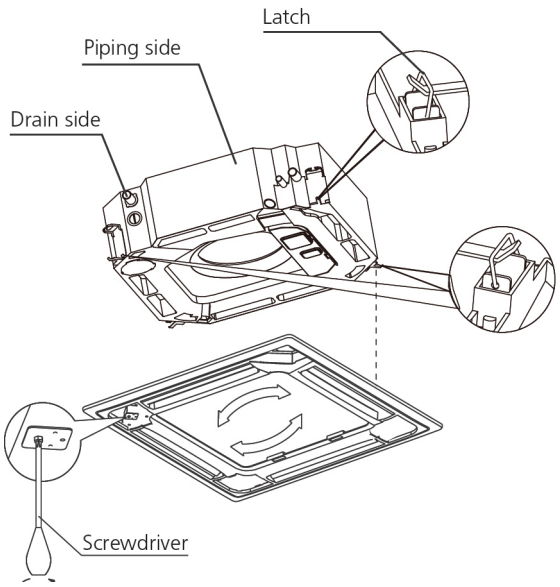

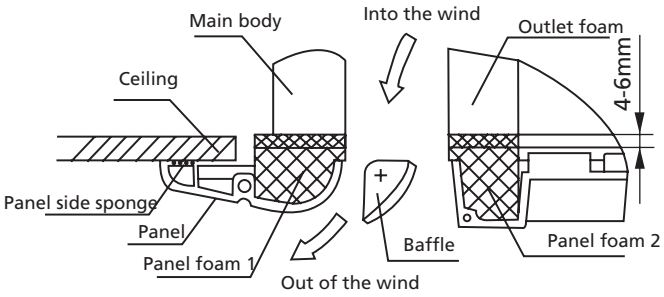

NOTE: If the height of the indoor unit needs to be adjusted, you can do so through the openings at the panel's four corners. Make sure that the internal wiring and drainpipe are not affected by this adjustment.

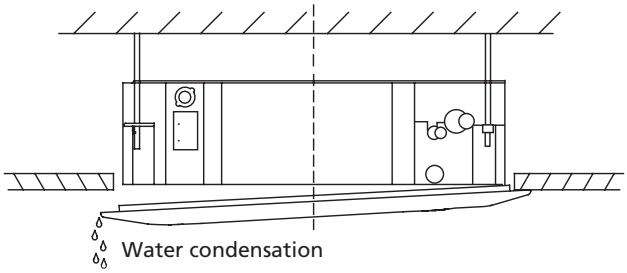

Failure to tighten screws can cause water leakage.

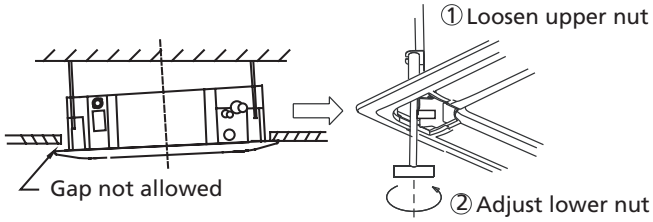

If the unit is not hung correctly and a gap exists, the unit's height must be adjusted to ensure proper function. The unit's height can be adjusted by loosening the upper nut, and adjusting the lower nut.

3. Hang the intake grille on the panel, and then connect the lead connectors of the louver motor and the control box on the panel to the corresponding connectors of the main body.

4. Re-installed into the style grid.

5.Reinstall the installation cover.

Fix the installation cover plate rope to the pillar of the installation cover plate, and gently press the installation cover plate into the panel.

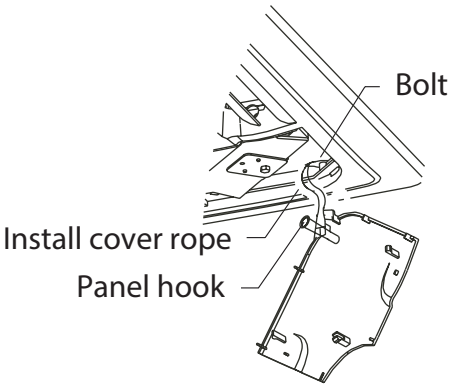

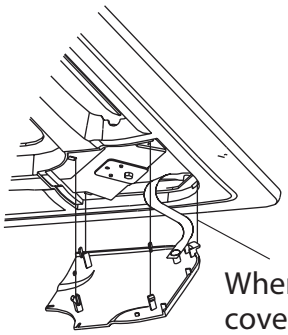

When installing the cover, slide the four slide fasteners into the corresponding slots on the panel.

NOTE: After installation, the butt plugs of display, swing, water pump and other wire bodies must be placed in the electric control box.

3. Indoor Unit Installation(Duct)

3.1 Service space for indoor unit

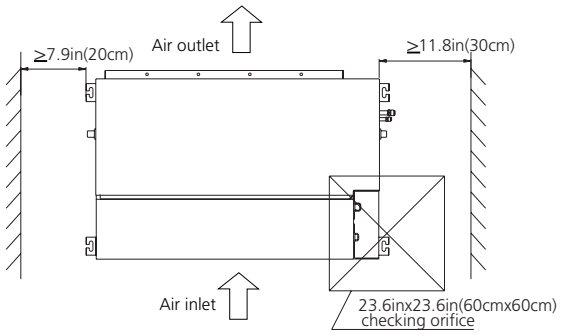

3.2 Hang Indoor Unit

1. Please refer to the following diagrams to locate the four positioning screw bolt hole on the ceiling. Be sure to mark the areas where ceiling hook holes will be drilled.

For A6 Duct,

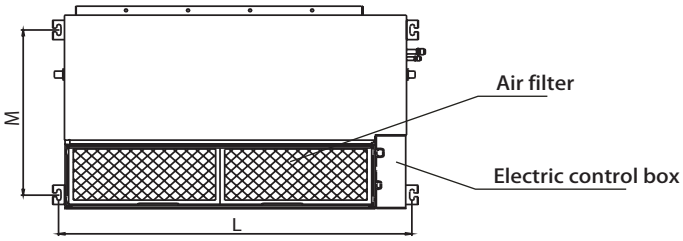

Capacity(KBtu/h)	Size of mounted plug((mm/inch))	
	L	M
12	741/29.2	360/14.2
18	920/36.2	508/20
24	1140/44.9	598/23.5
30~36	1400/55.1	598/23.5
42~60	1240/48.8	697/27.4

2. Install and fit pipes and wires after you have finished installing the main body. When choosing where to start, determine the direction of the pipes to be drawn out.

Especially in cases where there is a ceiling involved, align the refrigerant pipes, drain pipes, and indoor and outdoor lines with their connection points before mounting the unit..

3. Install hanging screw bolts.

1) Cut off the roof beam.

2) Strengthen the point at which the cut was made. Consolidate the roof beam..

4. After you select an installation location,align the refrigerant pipes, drain pipes, as well as indoor and outdoor wires with their connection points before mounting the unit..

5. Drill 4 holes 10cm (4") deep at the ceiling hook positions in the internal ceiling. Be sure to hold the drill at a 90° angle to the ceiling.

6. Secure the bolt using the included washers and nuts.

7. Install the four suspension bolts.

8. Mount the indoor unit with at least two people to lift and secure it. Insert suspension bolts into the unit's hanging holes. Fasten them using the washers and nuts provided.

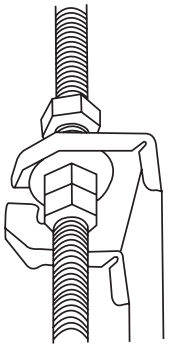

9. Mount the indoor unit onto the hanging screw bolts with a block. Position the indoor unit flat using a level indicator to prevent leaks.

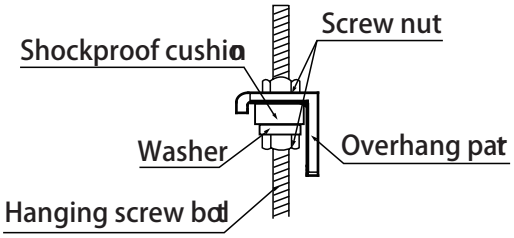

Note: Confirm the minimum drain tilt is 1/100 or more.

3.3 Duct and accessories installation

1. Install the filter(optional) according to air inlet size.

2. Install the canvas tie-in between the body and duct.

3. The air inlet and air outlet duct should be far enough apart enough to a avoid air passage short-circuit.

4. Connect the duct according to the following diagram.

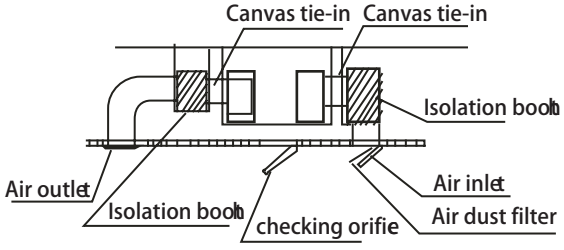

5. For DC motor models, you can change the fan motor static pressure according to external duct static pressure.

NOTE: 1. Do not put the connecting duct weight on the indoor unit.

2. When connecting the duct, use an nonflammable canvas tie-in to prevent vibrating.

3. When connecting duct, install in place prone to takedown for maintenance.

4. Change the fan motor static pressure corresponding to external duct static pressure.

5. If installed in place like meeting room where noise is easy to be perceived, design isolation booth and internal duct underlayer to muffle the duct system and weaken the air encounter noise in the duct.

3.4 Adjust the air inlet direction(From rear side to under-side.)

1. Take off ventilation panel and flange,

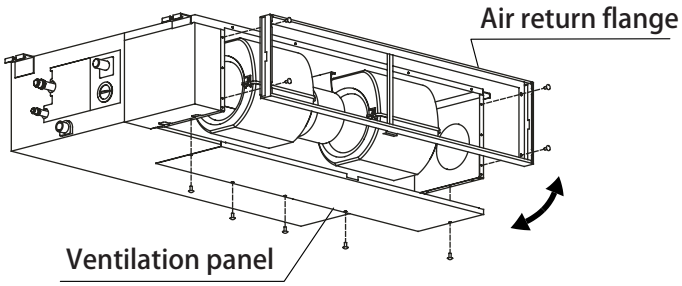

Bend the rear ventilation panel 90 degrees along the dotted line into a descending ventilation panel.(some models)

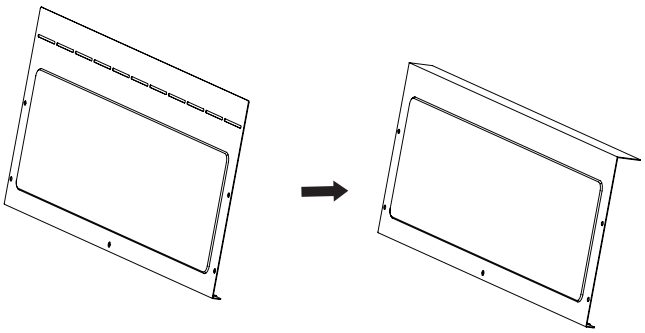

2. Change the mounting positions of ventilation panel and air return flange .

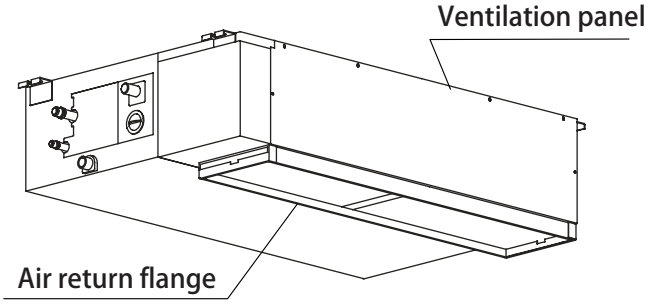

3. When installing the filter mesh, fit it into the flange as illustrated in the following figure.

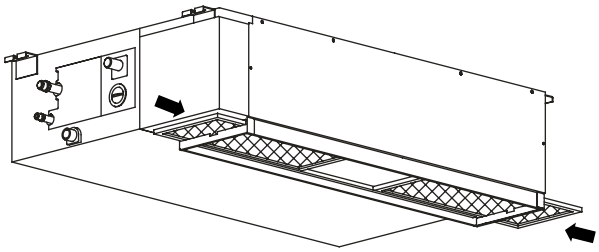

or

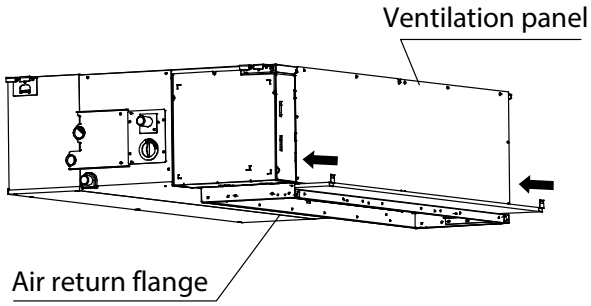

NOTE: All the figures in this manual are for demonstration purposes only. The air conditioner you have purchased may be slightly different in design, though similar in shape.

3.5 Fresh air duct installation

Dimension :

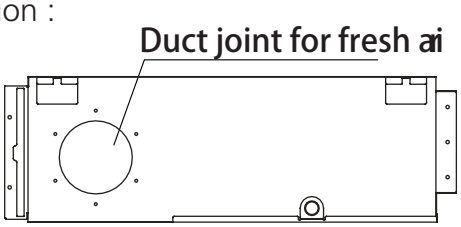

9-12k

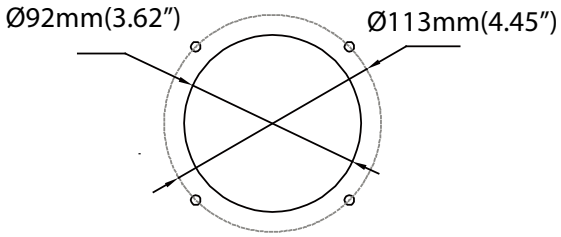

18-60k

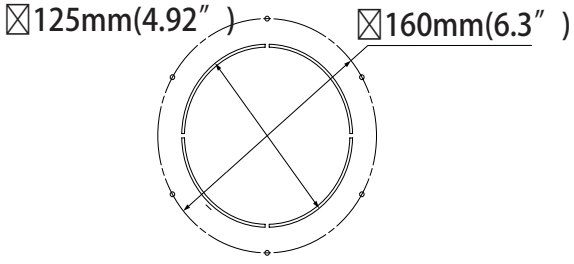

3.6 Horizontal Installation

3.6.1 With External pump (9K, 12K models)

Cut both ends of the rubber hose into a straight one, use it to connect the drain Connector A and the external pump and safety it with clamps on both ends. Then connect the drainpipe to the Connector B.

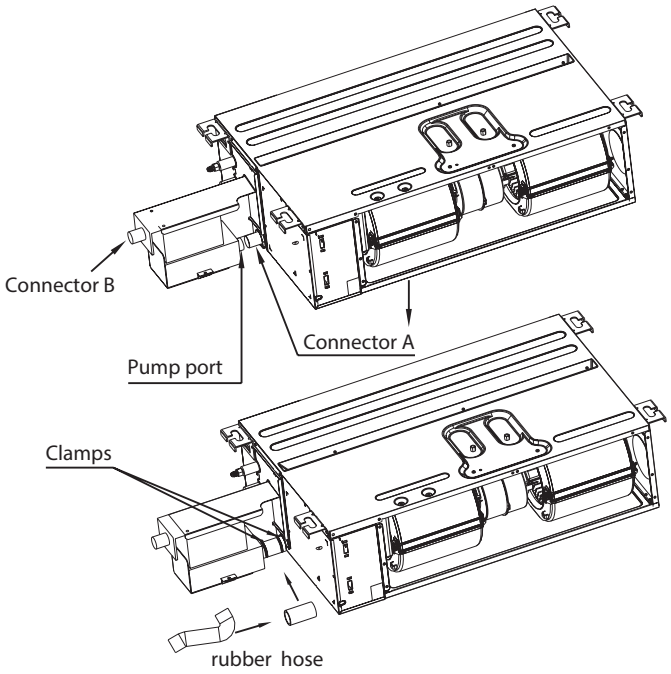

3.6.2 With External pump (18K model only)

Drain connector A, B & C are covered with caps originally. Take the cap on drain connector B off, connect the external pump to drain connector B using a hose & two hoseclamps. Then connect the drainpipe to the connector D.

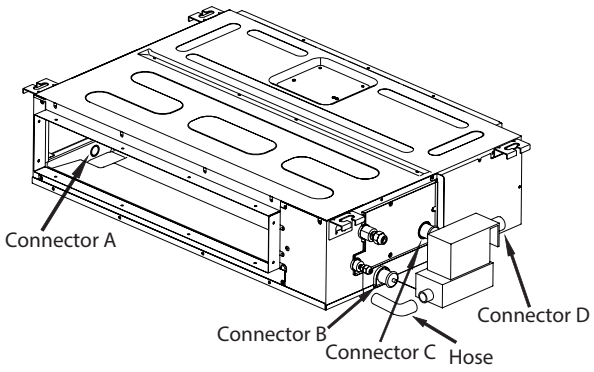

Plug the external pump to the "PUMP" pin and the water level sensor to the "CN5" to enable the pump.

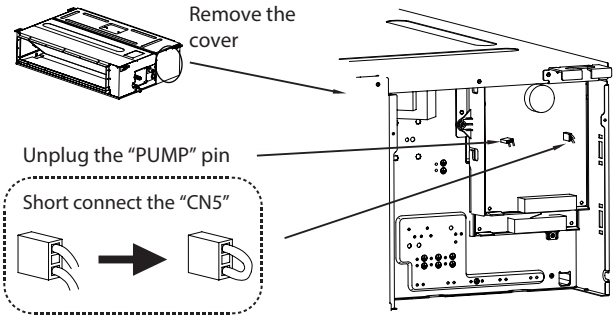

Fig. 1

3.6.3 With Built-in pump (24K, 36K, 48K models)

Drain connector A, B & C are covered with caps originally. Connect the drainpipe to the connector D.

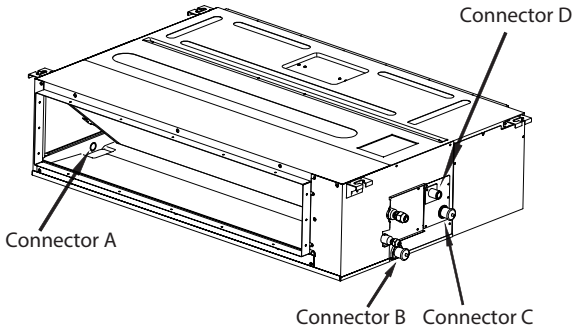

3.7 Vertical Installation

3.7.1 No need pump (Disable pump)

The pump must be disabled while the unit is installed vertically or the pump assembly is removed from its original position.

Open the cover of E-Parts Box assembly, unplug the "PUMP" pin to disable the pump function, and short connect "CN5" plug to disable the water level sensor. (see Fig. 1)

3.7.2 Drain pipe connecting

When installed vertically (up flow), the pump must be disabled firstly. Follow the 3.7.1 steps to disable the pump. For the unit with external pump (9K ,12K &18K models), the whole pump assembly can be removed. Then take the cap on drain connector off and connect the drainpipe to drain connector .

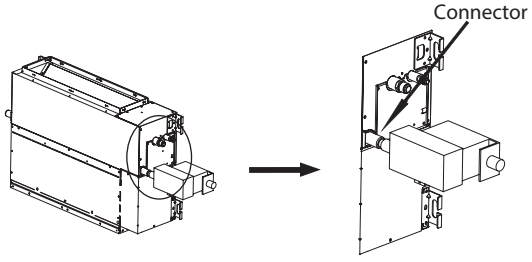

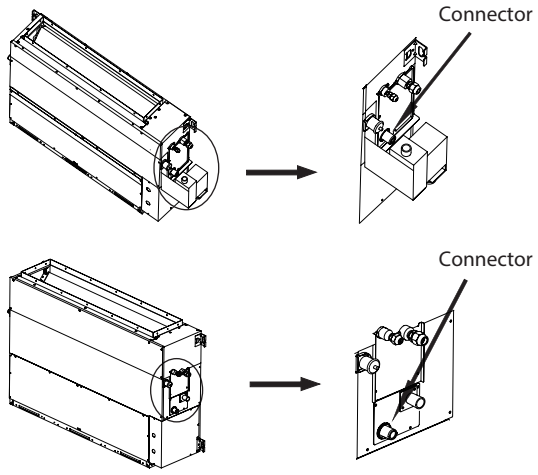
Connector
Connector

3. Indoor Unit Installation(Floor Ceiling Type)

3.1 Service space for indoor unit

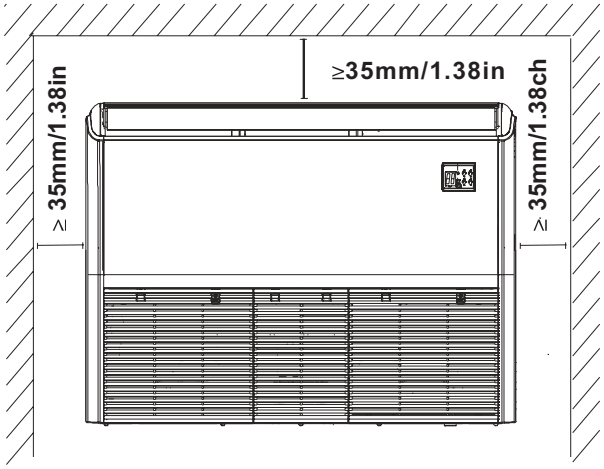

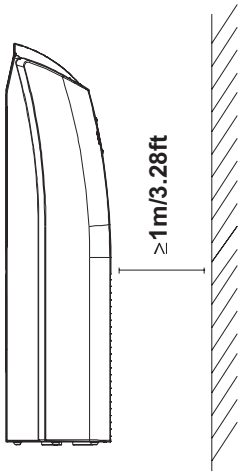

3.2 Bolt Pitch

Ceiling Installation

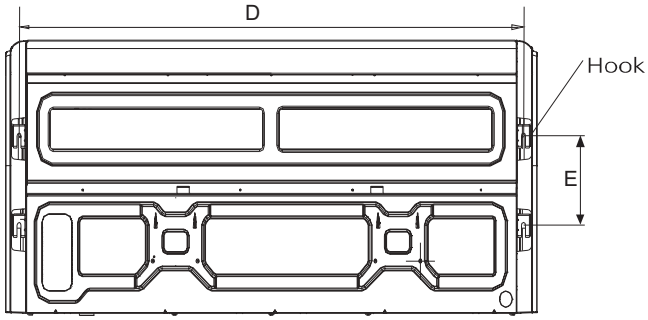

Capacity(kBtu/h)	Length of D (mm/inch)	Length of E (mm/inch)
18~24	983/38.7	220/8.7
36~60	1565/61.6	220/8.7

Wall-Mounted Installation

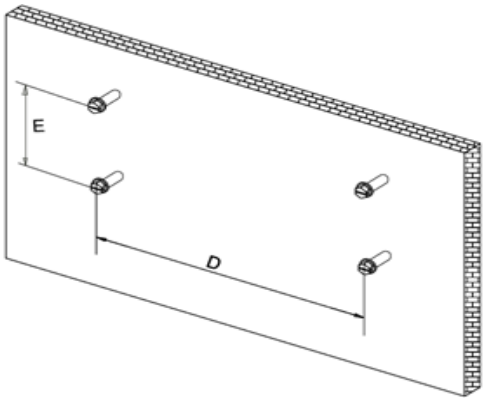

3.3 Hang Indoor Unit

1. The installation of hanging screw bolts.
   - Cut off the roof beam.
   - Strengthen the area at which the cut was made and consolidate the roof beam.
2. After the selection of the installation location, position the refrigerant pipes, drain pipes, and indoor and outdoor wires to the connection points before mounting the machine.
3. Drill 4 holes 10cm (4") deep at the ceiling hook positions in the internal ceiling. Be sure to hold the drill at a 90° angle to the ceiling.
4. Secure the bolt using the included washers and nuts.
5. Install the four suspension bolts.
6. Mount the indoor unit. You will need two people to lift and secure it. Insert suspension bolts into the unit's hanging holes. Fasten them using the included washers and nuts

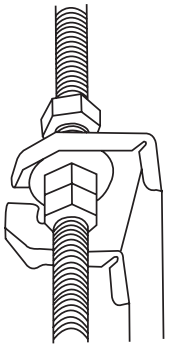

7. Remove the side board and the grille.

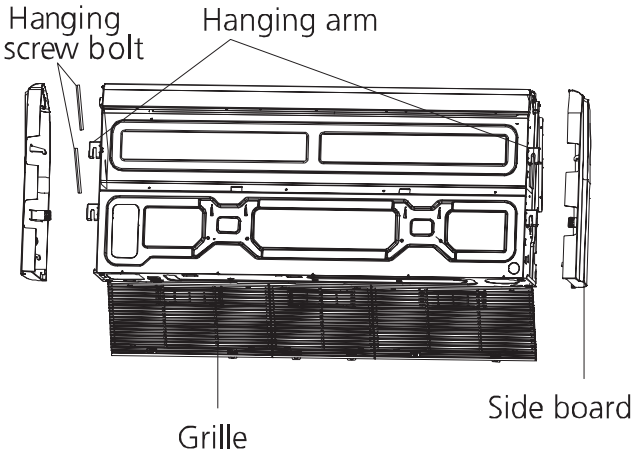

8. Mount the indoor unit onto the hanging screw bolts with a block.

Position the indoor unit on a flat level by using a level to prevent leaks.

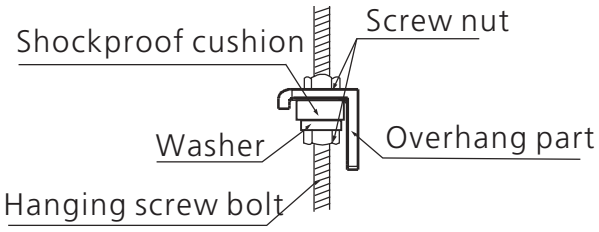

Note: Confirm the minimum drain tilt is 1/100 or more.

Ceiling Installation

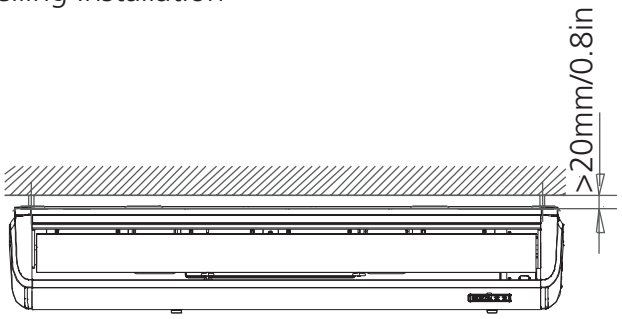

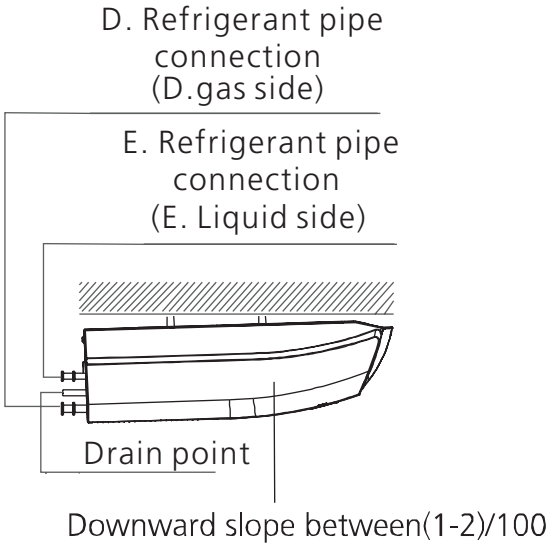

Wall-Mounted Installation

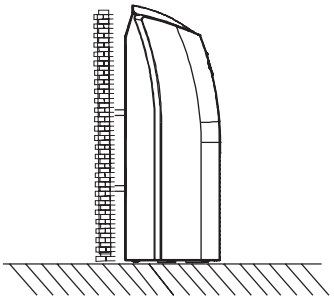

4. Outdoor unit installation

4.1 Service space for outdoor unit

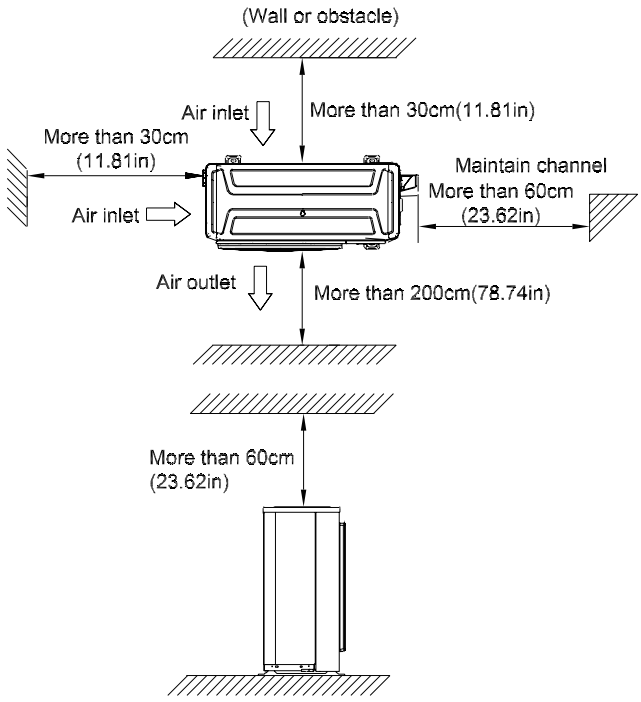

4.2 Bolt pitch

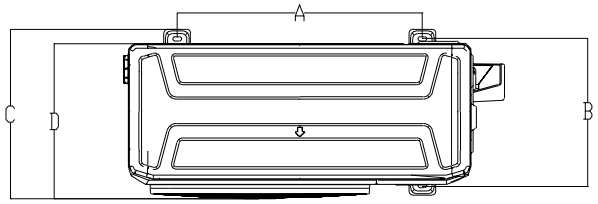

Panel Plate	Unit	D	A	B	C
B30	mm	333	514	340	365
	inch	13.11	20.23	13.39	14.37
CA30	mm	363	540	350	375
	inch	14.29	21.26	13.78	14.8
D30	mm	410	673	403	455
	inch	16.14	26.50	15.87	17.9
X2	mm	303	452	286	314
	inch	11.93	17.80	11.26	12.36
X3	mm	330	511	317	346
	inch	12.99	20.12	12.48	13.62
X4	mm	342	663	354	394
	inch	13.46	26.1	13.94	15.5
E30	mm	415	634	404	457
	inch	16.34	24.96	15.9	17.99
590	mm	350	590	378	400
	inch	13.78	23.23	14.88	15.75

4.3 Install Outdoor Unit

Fix the outdoor unit with anchor bolts(M10)

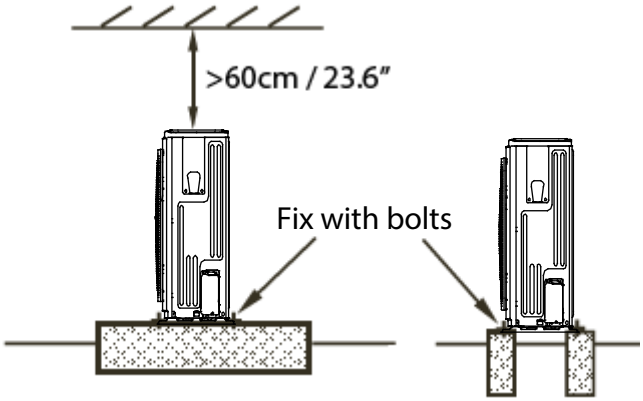

Caution

Since the gravity center of the unit is not at its physical center, so please be careful when lifting it with a sling.

Never hold the inlet of the outdoor unit to prevent it from deforming.

Do not touch the fan with hands or other objects.

Do not lean it more than 45, and do not lay it sidelong.

Make concrete foundation according to the specifications of the outdoor units.

Fasten the feet of this unit with bolts firmly to prevent it from collapsing in case of earthquake or strong wind.

5. Drainage Pipe Installation

Install the drainage pipe as shown below and take measures against condensation. Improperly installation could lead to leakage and eventually wet furniture and belongings.

5.1 Installation principle

- Ensure at least 1/100 slope of the drainage pipe
- Adopt suitable pipe diameter
- Adopt nearby condensate water discharge

5.2 Key points of drainage water pipe installation

1. Considering the pipeline route and elevation.
   - Before installing condensate water pipeline, determine its route and elevation to avoid intersection with other pipelines and ensure slope is straight.
2. Drainage pipe selection
   - The drainage pipe diameter shall not small than the drain hose of indoor unit
   - According to the water flowrate and drainage pipe slope to choose the suitable pipe, the water flowrate is decided by the capacity of indoor unit.

Relationship between water flowrate and capacity of indoor unit

Capacity (kBtu/h)	Water flowrate (l/h)
12	2.4
18	4
24	6
30	7
36	8
42	10
48	12
60	14

According to the above table to calculate the total water flowrate for the confluence pipe selection.

For horizontal drainage pipe (The following table is for reference)

PVC pipe	Reference value of inner diameter of pipe (mm)	Allowable maximum water flowrate (l/h)		Remark
		Slope 1/50	Slope 1/100	
PVC25	20	39	27	For branch pipe
PVC32	25	70	50	
PVC40	31	125	88	Could be used for confluence pipe
PVC50	40	247	175	
PVC63	51	473	334	

Attention: Adopt PVC40 or bigger pipe to be the main pipe.

For Vertical drainage pipe (The following table is for reference)

PVC pipe	Reference value of inner diameter of pipe (mm)	Allowable maximum water flowrate (l/h)	Remark
PVC25	20	220	For branch pipe
PVC32	25	410	
PVC40	31	730	Could be used for confluence pipe
PVC50	40	1440	
PVC63	51	2760	
PVC75	67	5710	
PVC90	77	8280	

Attention: Adopt PVC40 or bigger pipe to be the main pipe.

3. Individual design of drainage pipe system
   - The drainage pipe of air conditioner shall be installed separately with other sewage pipe, rainwater pipe and drainage pipe in building.
   - The drainage pipe of the indoor unit with water pump should be apart from the one without water pump.
4. Supporter gap of drainage pipe
   - In general, the supporter gap of the drainage pipe horizontal pipe and vertical pipe is respectively 1m~1.5m and 1.5m~2.0m.
   - Each vertical pipe shall be equipped with not less than two hangers.
   - Overlarge hanger gap for horizontal pipe shall create bending, thus leading to air block.

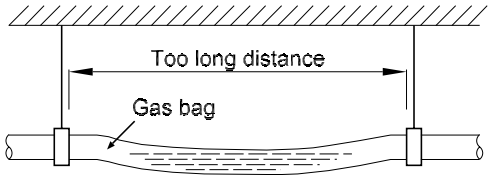

5. The horizontal pipe layout should avoid converse flow or bad flow

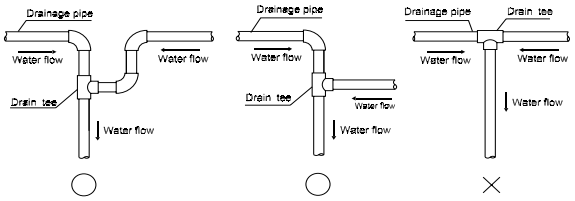

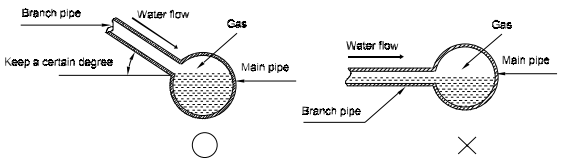

- The correct installation will not cause converse water flow and the slope of the branch pipes can be adjusted freely
- The false installation will cause converse water flow and the slope of the branch pipe can not be adjusted.

6. Water storage pipe setting

- If the indoor unit has high extra static pressure and without water pump to elevate the condensate water, such as high extra static pressure duct unit , the water storage pipe should be set to avoid converse flow or blow water phenomena.

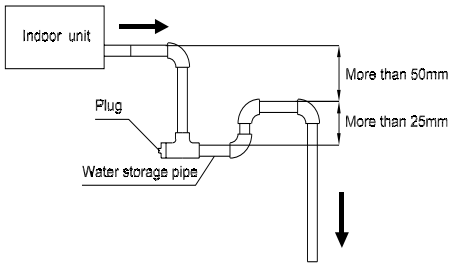

7. Lifting pipe setting of indoor unit with water pump

- The length of lifting pipe should not exceed 750mm/29.5in;

The drainage pipe should be set down inclined after the lifting pipe immediately to avoid wrong operation of water level switch.

- Refer the following picture for installation reference.

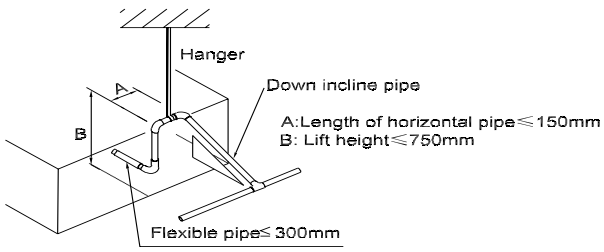

8. Blowhole setting

- For the concentrated drainage pipe system, there should design a blowhole at the highest point of main pipe to ensure the condensate water discharge smoothly.
- The air outlet shall face down to prevent dirt entering pipe.
- Each indoor unit of the system should be installed it.
- The installation should be considering the convenience for future cleaning.

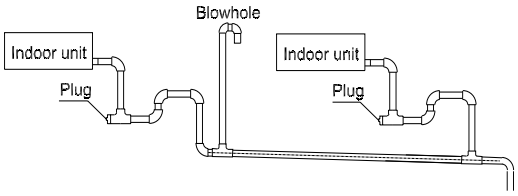

9. The end of drainage pipe shall not contact with ground directly.

5.3 Insulation work of drainage pipe

Refer the introduction to the insulation engineering parts.

6. Refrigerant Pipe Installation

6.1 Maximum length and drop height

Ensure that the length of the refrigerant pipe, the number of bends, and the drop height between the indoor and outdoor units meets the requirements shown in the following table.

For North America, Australia and Europe 3D Inverter models:

Capacity(kBtu/h)	Max. Length (m/ft)	Max. Elevation (m/ft)
<15	25/82	10/32.8
15-23	30/98.4	20/65.6
24~35	50/164	25/82
36~60	75/246.06	30/98.4

For other models:

Capacity(kBtu/h)	Max. Length (m/ft)	Max. Elevation (m/ft)
12	15/49	8/26
18-24	25/82	15/49
30-36	30/98.4	20/65.6
42~60	50/164	30/98.4

Caution:

1. The capacity test is based on the standard length and the maximum permissive length is based on the system reliability.

2. Oil traps

-If oil flows back into the outdoor unit's compressor, this might cause liquid compression or deterioration of oil return. Oil traps in the rising gas piping can prevent this.

-An oil trap should be installed every 6m(20ft) of vertical suction line riser (<36000Btu/h unit).

-An oil trap should be installed every 10m(32.8ft) of vertical suction line riser (≥36000Btu/h unit).

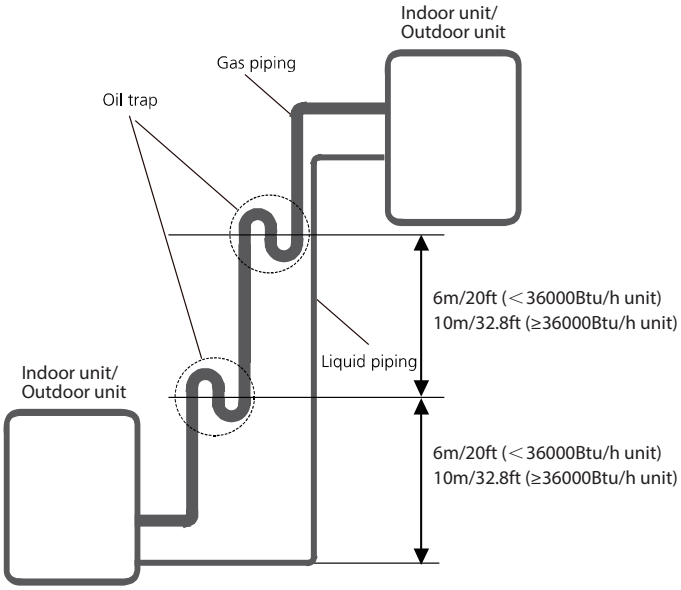

6.2 The procedure of connecting pipes

1.Choose the pipe size according to the specification table.

2.Confirm the cross way of the pipes.

3.Measure the necessary pipe length.

4.Cut the selected pipe with pipe cutter

- Make the section flat and smooth.

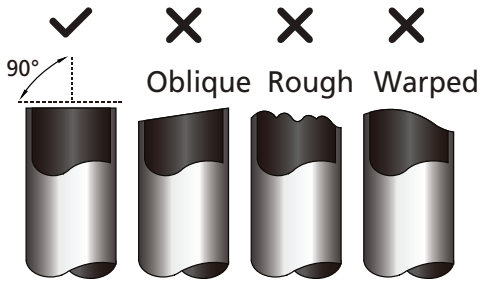

5. Insulate the copper pipe

- Before test operation, the joint parts should not be heat insulated.

6. Flare the pipe

- Insert a flare nut into the pipe before flaring the pipe
- According to the following table to flare the pipe.

Pipe diameter (inch(mm))	Flare dimension A (mm/inch)		Flare shape
	Min	Max	
1/4" (6.35)	8.4/0.33	8.7/0.34	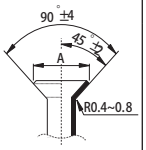
3/8" (9.52)	13.2/0.52	13.5/0.53	
1/2" (12.7)	16.2/0.64	16.5/0.65	
5/8" (15.9)	19.2/0.76	19.7/0.78	
3/4" (19)	23.2/0.91	23.7/0.93	
7/8" (22)	26.4/1.04	26.9/1.06	

- After flared the pipe, the opening part must be seal by end cover or adhesive tape to avoid duct or exogenous impurity come into the pipe.

7. Drill holes if the pipes need to pass the wall.

8. According to the field condition to bend the pipes so that it can pass the wall smoothly.

9. Bind and wrap the wire together with the insulated pipe if necessary.

10. Set the wall conduit

11. Set the supporter for the pipe.

12. Locate the pipe and fix it by supporter

- For horizontal refrigerant pipe, the distance between supporters should not be exceed 1m.
- For vertical refrigerant pipe, the distance between supporters should not be exceed 1.5m.

13. Connect the pipe to indoor unit and outdoor unit by using two spanners.

- Be sure to use two spanners and proper torque to fasten the nut, too large torque will damage the bellmouthing, and too small torque may cause leakage. Refer the following table for different pipe connection.

Pipe Diameter	Torque	Sketch map
	N.m(lb.ft)	
1/4" (6.35)	15~16 (11~11.8)	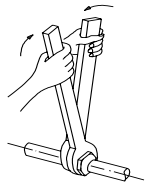
3/8" (9.52)	25~26 (18.4~19.18)	
1/2" (12.7)	35~36 (25.8~26.55)	
5/8" (15.9)	45~47 (33.19~34.67)	
3/4" (19)	65~67 (47.94~49.42)	
7/8" (22)	75-85 (55.3-62.7)	

7. Vacuum Drying and Leakage Checking

7.1 Purpose of vacuum drying

- Eliminating moisture in system to prevent the phenomena of ice-blockage and copper oxidation.

  Ice-blockage shall cause abnormal operation of system, while copper oxide shall damage compressor.
- Eliminating the non-condensable gas (air) in system to prevent the components oxidizing, pressure fluctuation and bad heat exchange during the operation of system.

7.2 Selection of vacuum pump

- The ultimate vacuum degree of vacuum pump shall be -756mmHg or above.
- Precision of vacuum pump shall reach 0.02mmHg or above.

7.3 Operation procedure for vacuum drying

Due to different construction environment, two kinds of vacuum drying ways could be chosen, namely ordinary vacuum drying and special vacuum drying.

7.3.1 Ordinary vacuum drying

1. When conduct first vacuum drying, connect pressure gauge to the infusing mouth of gas pipe and liquid pipe, and keep vacuum pump running for 1hour (vacuum degree of vacuum pump shall be reached -755mmHg).

2. If the vacuum degree of vacuum pump could not reach -755mmHg after 1 hour of drying, it indicates that there is moisture or leakage in pipeline system and need to go on with drying for half an hour.

3. If the vacuum degree of vacuum pump still could not reach -755mmHg after 1.5 hours of drying, check whether there is leakage source.

4 . Leakage test: After the vacuum degree reaches -755mmHg, stop vacuum drying and keep the pressure for 1 hour. If the indicator of vacuum gauge does not go up, it is qualified. If going up, it indicates that there is moisture or leak source.

7.3.2 Special vacuum drying

The special vacuum drying method shall be adopted when:

1. Finding moisture during flushing refrigerant pipe.

2. Conducting construction on rainy day, because rain water might penetrated into pipeline.

3. Construction period is long, and rain water might penetrated into pipeline.

4. Rain water might penetrate into pipeline during construction.

Procedures of special vacuum drying are as follows:

1. Vacuum drying for 1 hour.

2. Vacuum damage, filling nitrogen to reach 0.5Kgf/cm^2 .

Because nitrogen is dry gas, vacuum damage could achieve the effect of vacuum drying, but this method could not achieve drying thoroughly when there is too much moisture. Therefore, special attention shall be drawn to prevent the entering of water and the formation of condensate water.

3. Vacuum drying again for half an hour.

If the pressure reached -755mmHg, start to pressure leakage test. If it cannot reached the value, repeat vacuum damage and vacuum drying again for 1 hour.

4. Leakage test: After the vacuum degree reaches -755mmHg, stop vacuum drying and keep the pressure for 1 hour. If the indicator of vacuum gauge does not go up, it is qualified. If going up, it indicates that there is moisture or leak source.

8. Additional Refrigerant Charge

- After the vacuum drying process is carried out, the additional refrigerant charge process need to be performed.
- The outdoor unit is factory charged with refrigerant. The additional refrigerant charge volume is decided by the diameter and length of the liquid pipe between indoor and outdoor unit. Refer the following formula to calculate the charge volume.

	Diameter of liquid pipe (mm(inch))	Formula
R22/ R410A(Throttling part in the indoor unit)	6.35(1/4)	V=30(0.32)g/m(oz/ft)×(L-standard pipe length)
	9.52(3/8)	V=65(0.69)g/m(oz/ft)×(L-standard pipe length)
	12.7(1/2)	V=115(1.23)g/m(oz/ft)×(L-standard pipe length)
R22(Throttling part in the outdoor unit)	6.35(1/4)	V=15(0.16)g/m(oz/ft)×(L-standard pipe length)
	9.52(3/8)	V=30(0.32)g/m(oz/ft)×(L-standard pipe length)
	12.7(1/2)	V=60(0.64)g/m(oz/ft)×(L-standard pipe length)
R410A(Throttling part in the outdoor unit)	6.35(1/4)	V=15(0.16)g/m(oz/ft)×(L-standard pipe length)
	9.52(3/8)	V=30(0.32)g/m(oz/ft)×(L-standard pipe length)
	12.7(1/2)	V=65(0.69)g/m(oz/ft)×(L-standard pipe length)
R32	6.35(1/4)	V=12(0.13)g/m(oz/ft)×(L-standard pipe length)
	9.52(3/8)	V=24(0.26)g/m(oz/ft)×(L-standard pipe length)
	12.7(1/2)	V=40(0.42)g/m(oz/ft)×(L-standard pipe length)

V: Additional refrigerant charge volume.

L : The length of the liquid pipe.

Note:

- Refrigerant may only be charged after performed the vacuum drying process.
- Always use gloves and glasses to protect your hands and eyes during the charge work.
- Use electronic scale or fluid infusion apparatus to weight refrigerant to be recharged. Be sure to avoid extra refrigerant charged, it may cause liquid hammer of the compressor or protections.
- Use supplementing flexible pipe to connect refrigerant cylinder, pressure gauge and outdoor unit. And The refrigerant should be charged in liquid state. Before recharging, The air in the flexible pipe and manifold gauge should be exhausted.
- After finished refrigerant recharge process, check whether there is refrigerant leakage at the connection joint part.(Using gas leakage detector or soap water to detect).

9 . Engineering of Insulation

9.1 Insulation of refrigerant pipe

1. Operational procedure of refrigerant pipe insulation

Cut the suitable pipe → insulation (except joint section) → flare the pipe → piping layout and connection→ vacuum drying → insulate the joint parts

2. Purpose of refrigerant pipe insulation

- During operation, temperature of gas pipe and liquid pipe shall be over-heating or over-cooling extremely. Therefore, it is necessary to carry out insulation; otherwise it shall debase the performance of unit and burn compressor.
- Gas pipe temperature is very low during cooling. If insulation is not enough, it shall form dew and cause leakage.
- Temperature of gas pipe is very high (generally 50-100℃) during heating. Insulation work must be carried out to prevent hurt by carelessness touching.

3. Insulation material selection for refrigerant pipe

- The burning performance should over 120℃
- According to the local law to choose insulation materials
- The thickness of insulation layer shall be above 10mm.If in hot or wet environment place, the layer of insulation should be thicker accordingly.

4. Installation highlights of insulation construction

- Gas pipe and liquid pipe shall be insulated separately, if the gas pipe and liquid pipe were insulated together; it will decrease the performance of air conditioner.

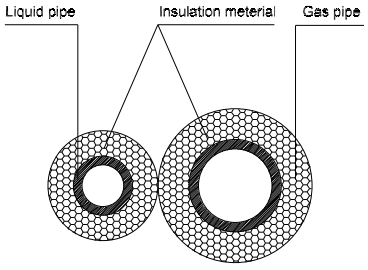

- The insulation material at the joint pipe shall be 5~10cm longer than the gap of the insulation material.
- The insulation material at the joint pipe shall be inserted into the gap of the insulation material.
- The insulation material at the joint pipe shall be banded to the gap pipe and liquid pipe tightly.
- The linking part should be use glue to paste together
- Be sure not bind the insulation material over-tight, it may extrude out the air in the material to cause bad insulation and cause easy aging of the material.

9.2 Insulation of drainage pipe

1. Operational procedure of refrigerant pipe insulation

Select the suitable pipe → insulation (except joint section) → piping layout and connection→ drainage test→ insulate the joint parts

2. Purpose of drainage pipe insulation

The temperature of condensate drainage water is very low. If insulation is not enough, it shall form dew and cause leakage to damage the house decoration.

3. Insulation material selection for drainage pipe

- The insulation material should be flame retardant material, the flame retardancy of the material should be selected according to the local law.
- Thickness of insulation layer is usually above 10mm.
- Use specific glue to paste the seam of insulation material, and then bind with adhesive tape. The width of tape shall not be less than 5cm. Make sure it is firm and avoid dew.

4. Installation and highlights of insulation construction

- The single pipe should be insulated before connecting to another pipe, the joint part should be insulated after the drainage test.
- There should be no insulation gap between the insulation material.

10. Engineering of Electrical Wring

1. Highlights of electrical wiring installation

- All field wiring construction should be finished by qualified electrician.
- Air conditioning equipment should be grounded according to the local electrical regulations.
- Current leakage protection switch should be installed.
- Do not connect the power wire to the terminal of signal wire.
- When power wire is parallel with signal wire, put wires to their own wire tube and remain at least 300mm gap.
- According to table in indoor part named "the specification of the power" to choose the wiring, make sure the selected wiring not small than the date showing in the table.
- Select different colors for different wire according to relevant regulations.
- Do not use metal wire tube at the place with acid or alkali corrosion, adopt plastic wire tube to replace it.
- There must be not wire connect joint in the wire tube If joint is a must, set a connection box at the place.
- The wiring with different voltage should not be in one wire tube.
- Ensure that the color of the wires of outdoor and the terminal No. are same as those of indoor unit respectively.

Table: Minimum Cross-Sectional Area able of Power and Signal Cables

For North America:

Rated Current of Appliance (A)	AWG
≤ 6	18
6 - 10	16
10 - 16	14
16 - 25	12
25 - 32	10

For the other regions:

Rated Current of Appliance (A)	Nominal Cross-Sectional Area(mm^2)
≤ 6	0.75
6 - 10	1
10 - 16	1.5
16 - 25	2.5
25 - 32	4
32 - 45	6

11. Test Operation

1. The test operation must be carried out after the entire installation has been completed.

2. Please confirm the following points before the test operation.

- The indoor unit and outdoor unit are installed properly.
- Piping and wiring are properly connected.
- Ensure that there are no obstacles near the inlet and outlet of the unit that might cause poor performance or product malfunction.
- The refrigeration system does not leak.
- The drainage system is unimpeded and draining to a safe location.
- The heating insulation is properly installed.
- The grounding wires are properly connected
- The length of the piping and the added refrigerant stow capacity have been recorded.
- The power voltage is the correct voltage for the air conditioner.

CAUTION: Failure to perform the test run may result in unit damage, property damage or personal injury.

3. Test Run Instructions

1. Open both the liquid and gas stop valves.

2. Turn on the main power switch and allow the unit to warm up.

3. Set the air conditioner to COOL mode, and check the following points.

Indoor unit

- Whether the switch on the remote controller works well.
- Whether the buttons on the remote controller works well.
- Whether the air flow louver moves normally.
- Whether the room temperature is adjusted well.
- Whether the indicator lights normally.
- Whether the temporary buttons works well.
- Whether the drainage is normal.
- Whether there is vibration or abnormal noise during operation.

Outdoor unit

- Whether there is vibration or abnormal noise during operation.
- Whether the generated wind, noise, or condensed of by the air conditioner have influenced your neighborhood.
- Whether any of the refrigerant is leaked.

4. Drainage Test

a. Ensure the drainpipe flow smoothly. New buildings should perform this test before finishing the ceiling.

b. Remove the test cover. Add 2000ml of water to the tank through the attached tube.

c. Turn on the main power switch and run the air conditioner in COOL mode.

d. Listen to the sound of the drain pump to see if it makes any unusual noises.

e. Check to see that the water is discharged. It may take up to one minute before the unit begins to drain depending on the drainpipe.

f. Make sure that there are no leaks in any of the piping.

g. Stop the air conditioner. Turn off the main power switch and reinstall the test cover.

Maintenance

Contents

1. First Time Installation Check 2

2 Refrigerant Recharge 4

3 Re-Installation 5

3.1 Indoor Unit 5

3.2 Outdoor Unit 7

1. First Time Installation Check

Air and moisture trapped in the refrigerant system affects the performance of the air conditioner by:

- Increasing pressure in the system.
- Increasing the operating current.
- Decreasing the cooling or heating efficiency.
- Congesting the capillary tubing due to ice build-up in the refrigerant circuit.
- Corroding the refrigerant system.

To prevent air and moisture from affecting the air conditioner's performance, the indoor unit, as well as the pipes between the indoor and outdoor unit, must be be leak tested and evacuated.

Leak test (soap water method)

Use a soft brush to apply soapy water or a neutral liquid detergent onto the indoor unit connections and outdoor unit connections. If there is gas leakage, bubbles will form on the connection.

Air purging with vacuum pump

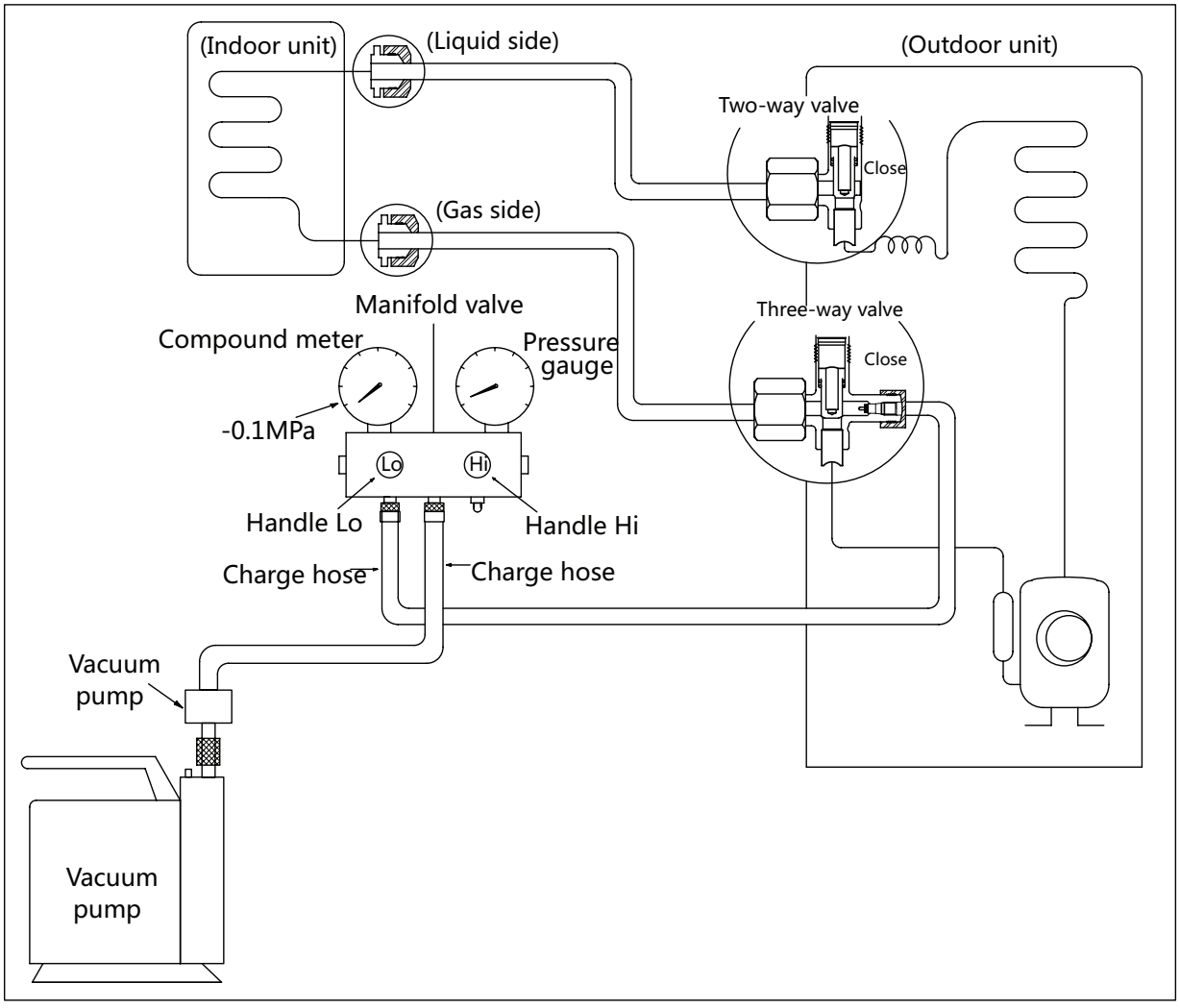

Procedure:

1. Tighten the flare nuts of the indoor and outdoor units, and confirm that both the 2- and 3-way valves are closed.
2. Connect the charge hose with the push pin of Handle Lo to the gas service port of the 3-way valve.
3. Connect another charge hose to the vacuum pump.
4. Fully open the Handle Lo manifold valve.
5. Using the vacuum pump, evacuate the system for 30 minutes.
   a. Check whether the compound meter indicates -0.1 MPa (14.5 Psi).
      - If the meter does not indicate -0.1 MPa (14.5 Psi) after 30 minutes, continue evacuating for an additional 20 minutes.
      - If the pressure does not achieve -0.1 MPa (14.5 Psi) after 50 minutes, check for leakage.
      - If the pressure successfully reaches -0.1 MPa (14.5 Psi), fully close the Handle Lo valve, then cease vacuum pump operations.
   b. Wait for 5 minutes then check whether the gauge needle moves after turning off the vacuum pump. If the gauge needle moves backward, check wether there is gas leakage.
6. Loosen the flare nut of the 3-way valve for 6 or 7 seconds and then tighten the flare nut again.
   a. Confirm the pressure display in the pressure indicator is slightly higher than the atmospheric pressure.
   b. Remove the charge hose from the 3-way valve.
7. Fully open the 2- and 3-way valves and tighten the cap of the 2- and 3-way valves.

2. Refrigerant Recharge

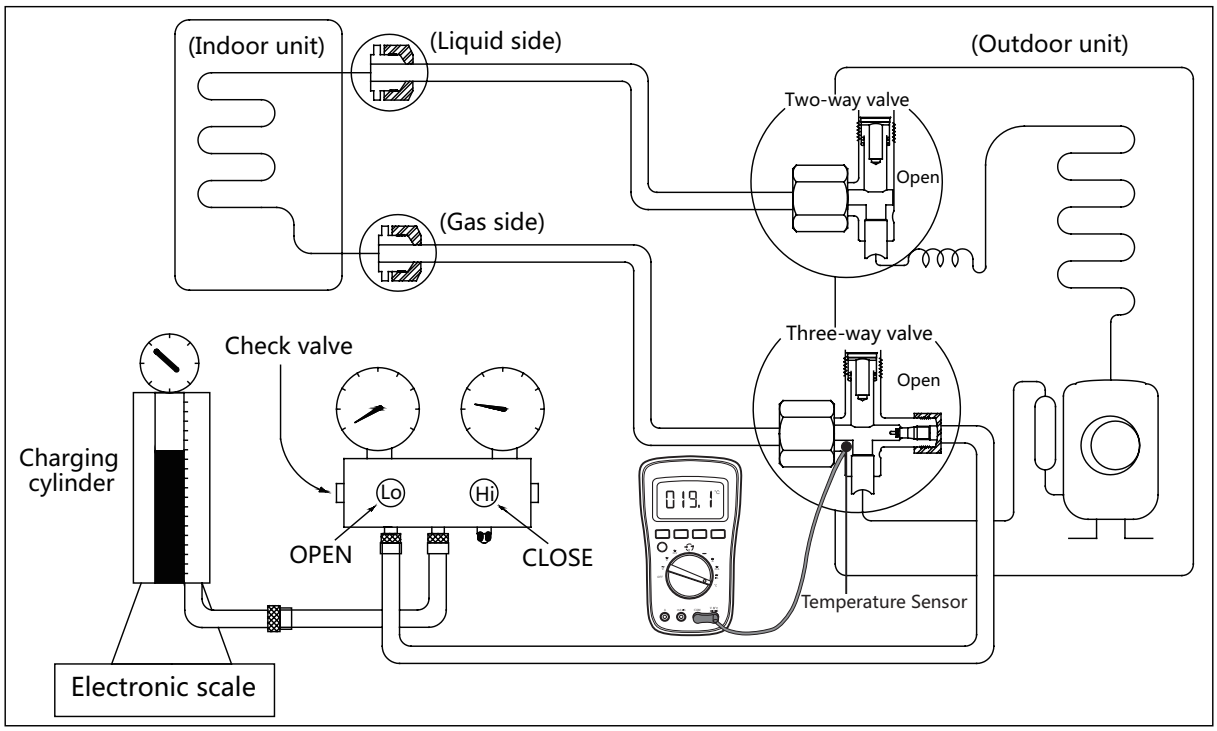

Procedure:

1. Close both 2- and 3-way valves.
2. Slightly connect the Handle Lo charge hose to the 3-way service port.
3. Connect the charge hose to the valve at the bottom of the cylinder.
4. If the refrigerant is R410A/R32, invert the cylinder to ensure a complete liquid charge.
5. Open the valve at the bottom of the cylinder for 5 seconds to purge the air in the charge hose, then fully tighten the charge hose with push pin Handle Lo to the service port of 3-way valve..
6. Place the charging cylinder onto an electronic scale and record the starting weight.
7. Fully open the Handle Lo manifold valve, 2- and 3-way valves.
8. Operate the air conditioner in cooling mode to charge the system with liquid refrigerant.
9. When the electronic scale displays the correct weight (refer to the gauge and the pressure of the low side to confirm, the value of pressure refers to chapter Appendix), turn off the air conditioner, then disconnect the charge hose from the 3-way service port immediately..
10. Mount the caps of service port and 2- and 3-way valves.
11. Use a torque wrench to tighten the caps to a torque of 18 N.m.
12. Check for gas leakage.

3. Re-Installation

3.1 Indoor Unit

Collecting the refrigerant into the outdoor unit

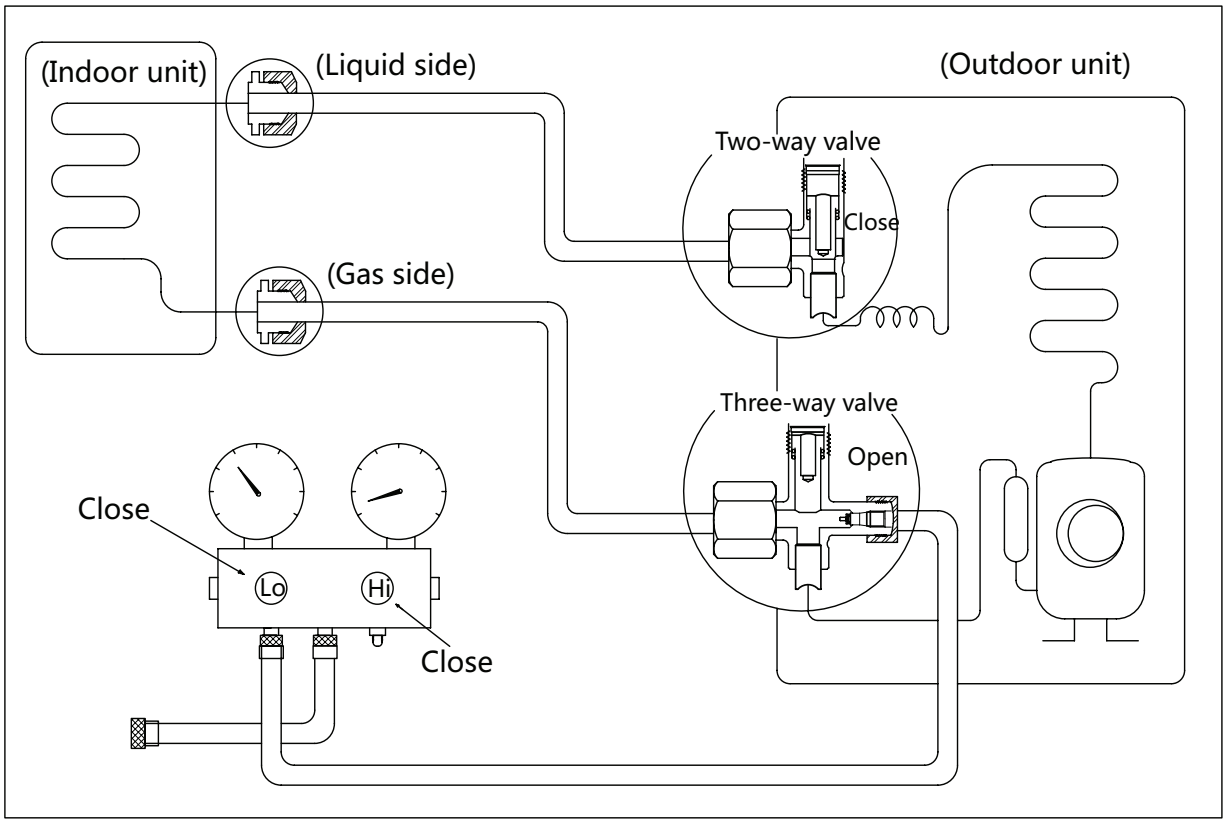

Procedure:

1. Confirm that the 2- and 3-way valves are opened.
2. Connect the charge hose with the push pin of Handle Lo to the 3-way valve's gas service port.
3. Open the Handle Lo manifold valve to purge air from the charge hose for 5 seconds and then close it quickly.
4. Close the 2-way valve.
5. Operate the air conditioner in cooling mode. Cease operations when the gauge reaches 0.1 MPa (14.5 Psi).
6. Close the 3-way valve so that the gauge rests between 0.3 MPa (43.5 Psi) and 0.5 MPa (72.5 Psi).
7. Disconnect the charge set and mount the caps of service port and 2- and 3-way valves.
8. Use a torque wrench to tighten the caps to a torque of 18 N.m.
9. Check for gas leakage.

Air purging with vacuum pump

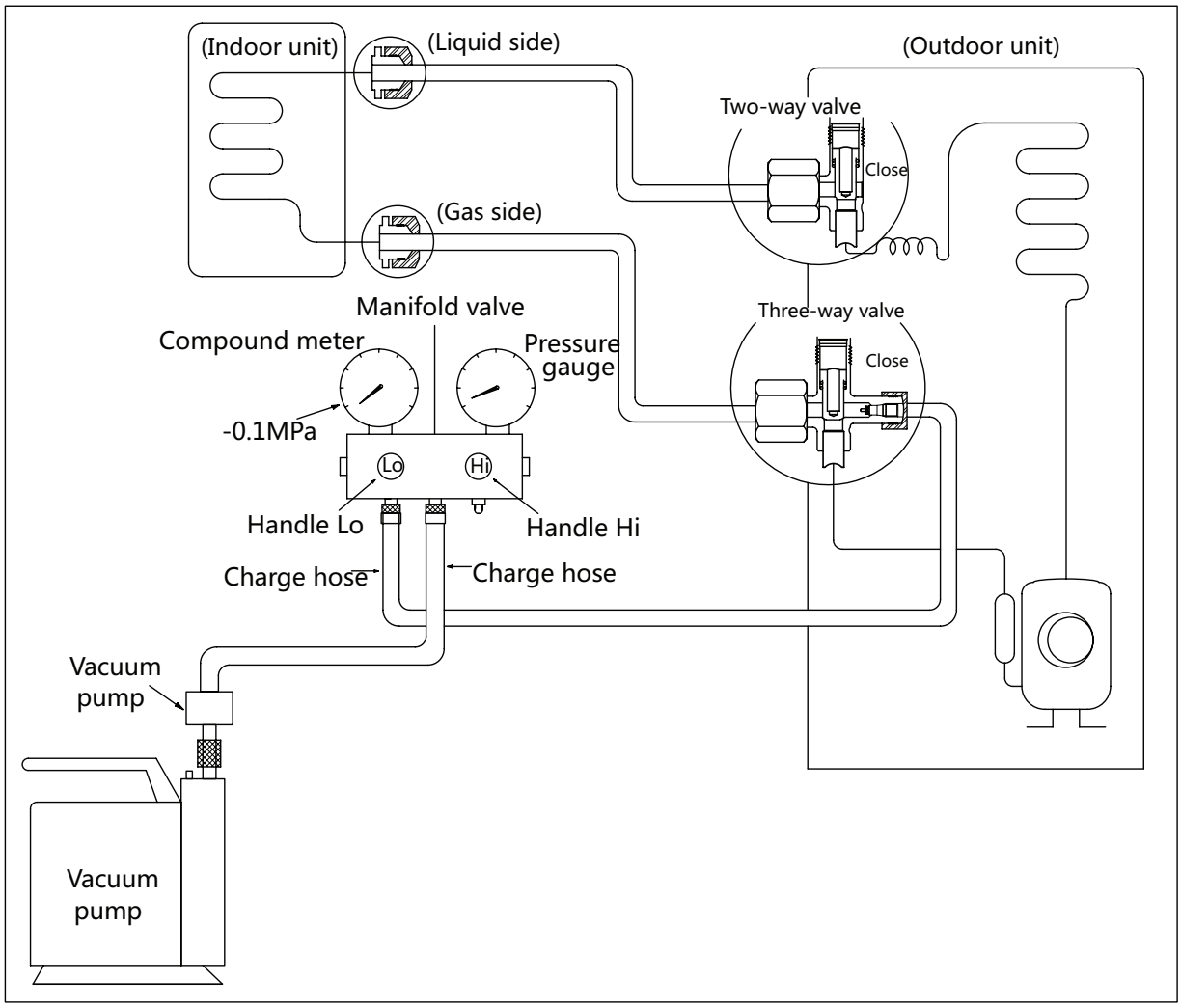

Procedure:

1. Tighten the flare nuts of the indoor and outdoor units, and confirm that both the 2- and 3-way valves are closed.
2. Connect the charge hose with the push pin of Handle Lo to the gas service port of the 3-way valve.
3. Connect another charge hose to the vacuum pump.
4. Fully open the Handle Lo manifold valve.
5. Using the vacuum pump, evacuate the system for 30 minutes.
   a. Check whether the compound meter indicates -0.1 MPa (14.5 Psi).
      - If the meter does not indicate -0.1 MPa (14.5 Psi) after 30 minutes, continue evacuating for an additional 20 minutes.
      - If the pressure does not achieve -0.1 MPa (14.5 Psi) after 50 minutes, check for leakage.
      - If the pressure successfully reaches -0.1 MPa (14.5 Psi), fully close the Handle Lo valve, then cease vacuum pump operations.

   b. Wait for 5 minutes then check whether the gauge needle moves after turning off the vacuum pump. If the gauge needle moves backward, check wether there is gas leakage.
6. Loosen the flare nut of the 3-way valve for 6 or 7 seconds and then tighten the flare nut again.
   a. Confirm the pressure display in the pressure indicator is slightly higher than the atmospheric pressure.
   b. Remove the charge hose from the 3-way valve.
7. Fully open the 2- and 3-way valves and tighten the cap of the 2- and 3-way valves.

3.2 Outdoor Unit

Evacuation for the whole system

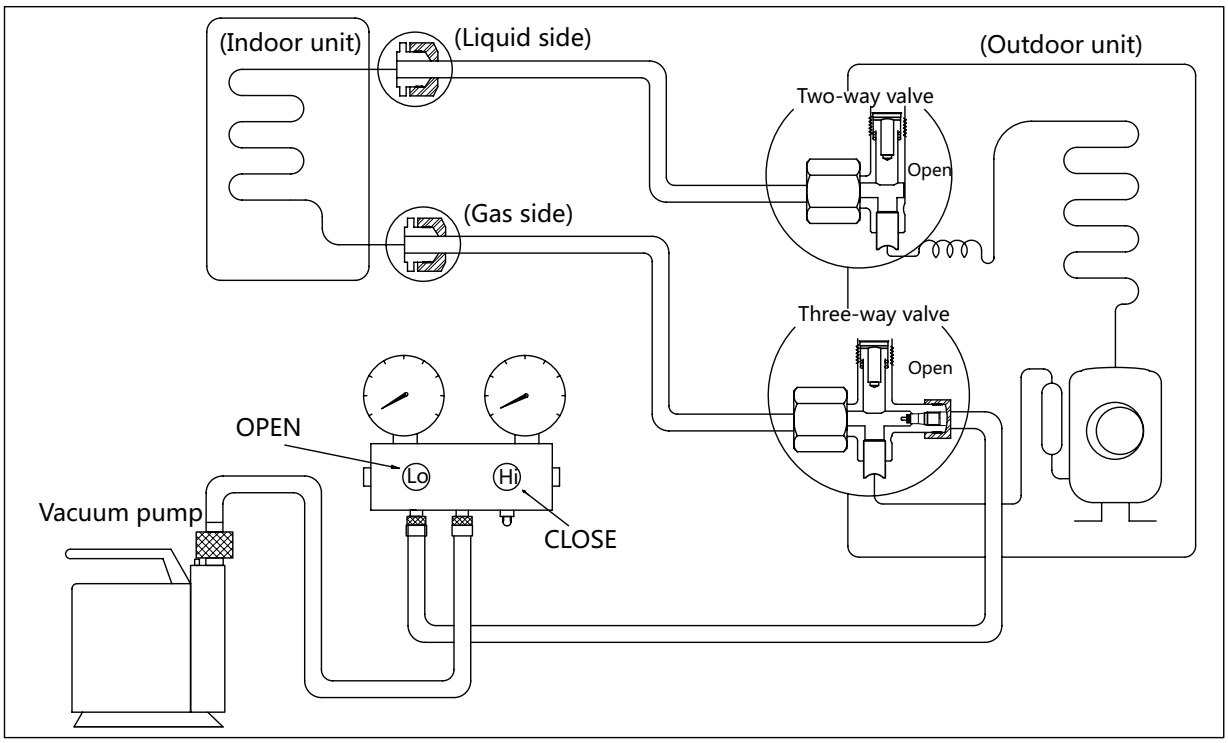

Procedure:

1. Confirm that the 2- and 3-way valves are opened.
2. Connect the vacuum pump to the 3-way valve's service port.
3. Evacuate the system for approximately one hour. Confirm that the compound meter indicates -0.1 MPa (14.5Psi).
4. Close the valve (Low side) on the charge set and turn off the vacuum pump.
5. Wait for 5 minutes then check whether the gauge needle moves after turning off the vacuum pump. If the gauge needle moves backward, check whether there is gas leakage.
6. Disconnect the charge hose from the vacuum pump.
7. Mount the caps of service port and 2- and 3-way valves.
8. Use a torque wrench to tighten the caps to a torque of 18 N.m.

Refrigerant charging

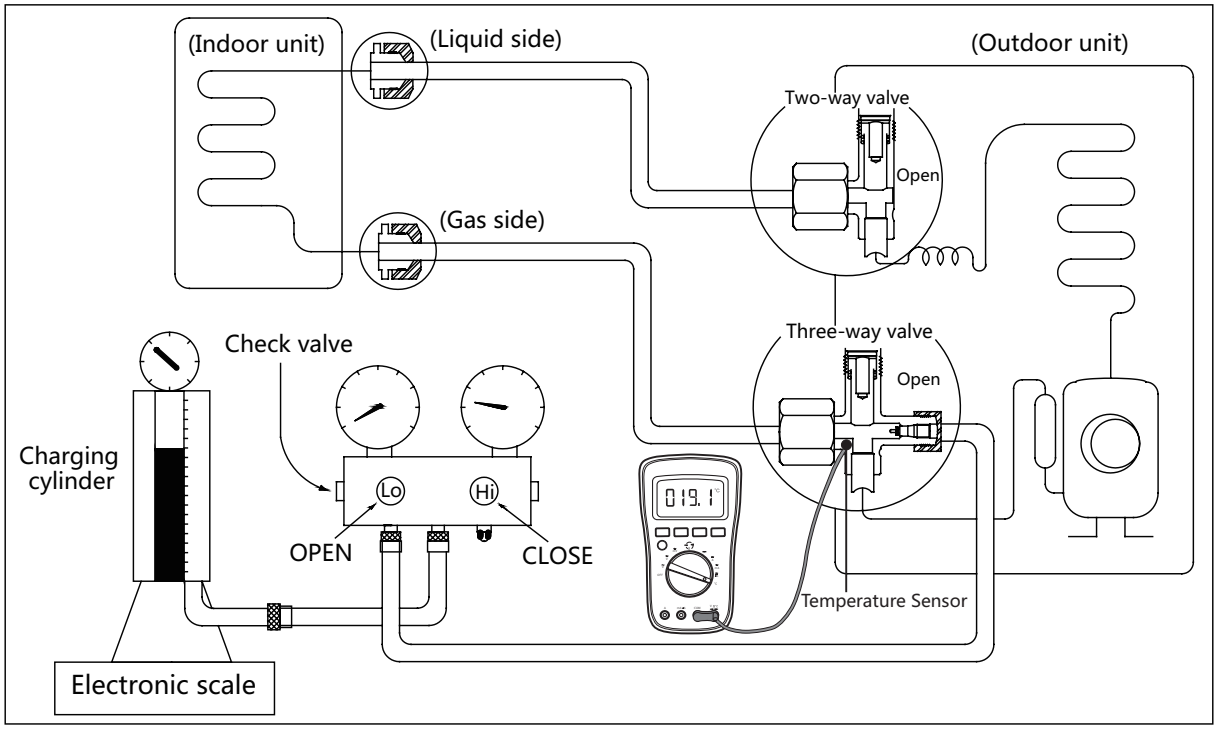

Procedure:

1. Close both 2- and 3-way valves.
2. Slightly connect the Handle Lo charge hose to the 3-way service port.
3. Connect the charge hose to the valve at the bottom of the cylinder.
4. If the refrigerant is R410A/R32, invert the cylinder to ensure a complete liquid charge.
5. Open the valve at the bottom of the cylinder for 5 seconds to purge the air in the charge hose, then fully tighten the charge hose with push pin Handle Lo to the service port of 3-way valve..
6. Place the charging cylinder onto an electronic scale and record the starting weight.
7. Fully open the Handle Lo manifold valve, 2- and 3-way valves.
8. Operate the air conditioner in cooling mode to charge the system with liquid refrigerant.
9. When the electronic scale displays the correct weight (refer to the gauge and the pressure of the low side to confirm, the value of pressure refers to chapter Appendix), turn off the air conditioner, then disconnect the charge hose from the 3-way service port immediately..
10. Mount the caps of service port and 2- and 3-way valves.
11. Use a torque wrench to tighten the caps to a torque of 18 N.m.
12. Check for gas leakage.

Note: 1. Mechanical connectors used indoors shall comply with local regulations.

2. When mechanical connectors are reused indoors, sealing parts shall be renewed. When flared joints are reused indoors, the flare part shall be re-fabricated.

Product Features

Contents

1. Display Function 2

2 Safety Features 5

3. Basic Functions 6

3.1 Table 6

3.2 Abbreviation 7

3.3 Fan Mode 7

3.4 Cooling Mode 7

3.5 Heating Mode(Heat Pump Units) 8

3.6 Auto-mode 9

3.7 Drying Mode 10

3.8 Forced Operation Function 10

3.9 Timer Function 10

3.10 Sleep Function 10

3.11 Auto-Restart Function 10

4. Optional Functions 11

5. Remote Controller Functions 12

5.1 Infrared Wireless Remote Controller 12

5.2 LCD Wired Remote Controller 16

5.3 Centralized Controller 32

5.4 Using the wire controller to set external static pressure(for duct type) 33

5.5 Using the wire controller to set airflow rate(for duct type) 33

1. Display Function

Floor Ceiling Type

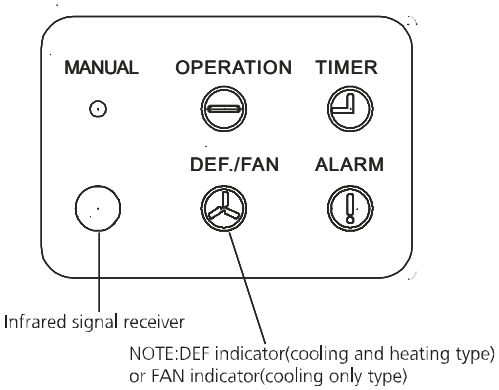

Display 1

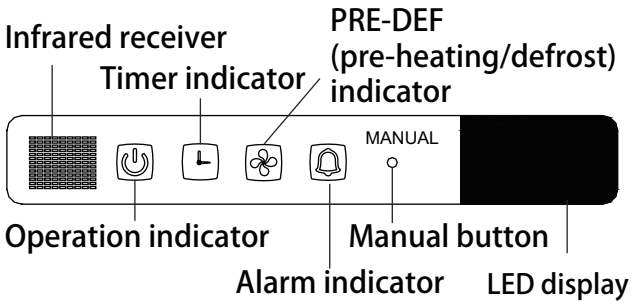

Display 2

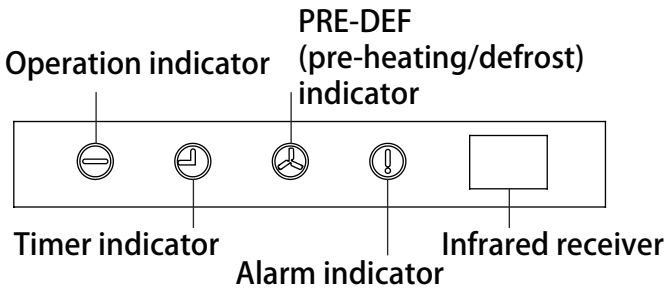

Display 3

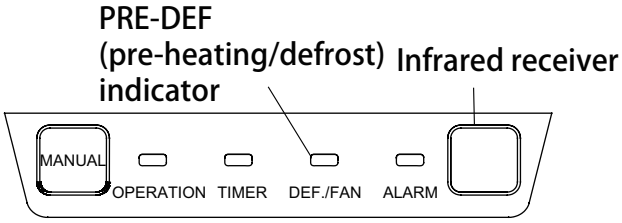

Display 4

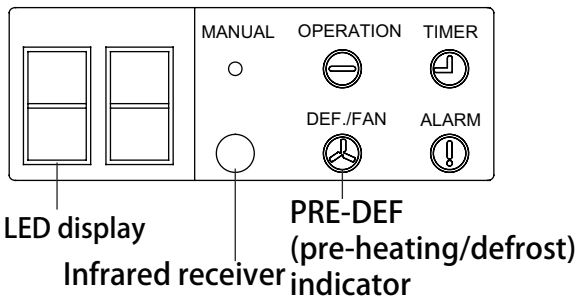

Display 5

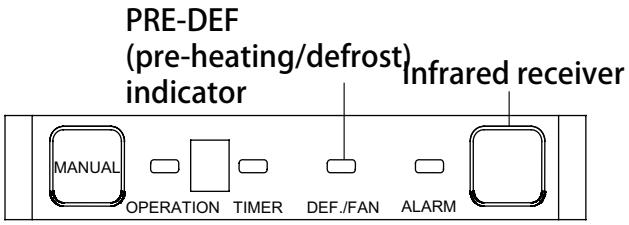

Display 6

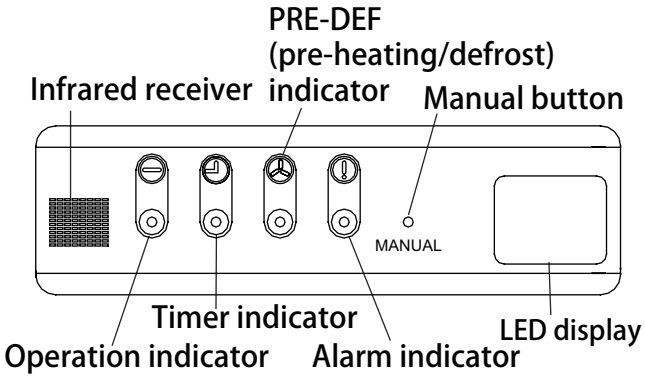

Display 7

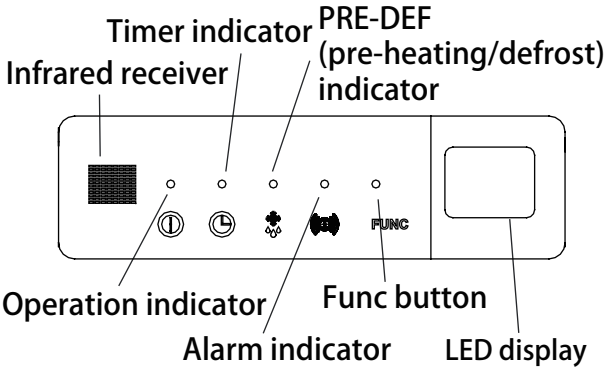

Display 8

Super-slim Cassette Type

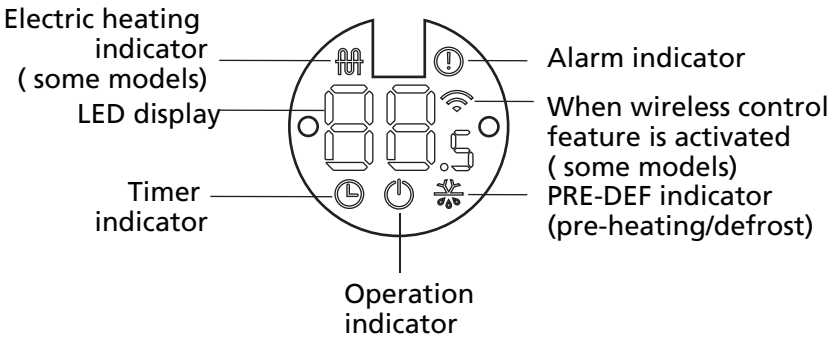

Duct Type

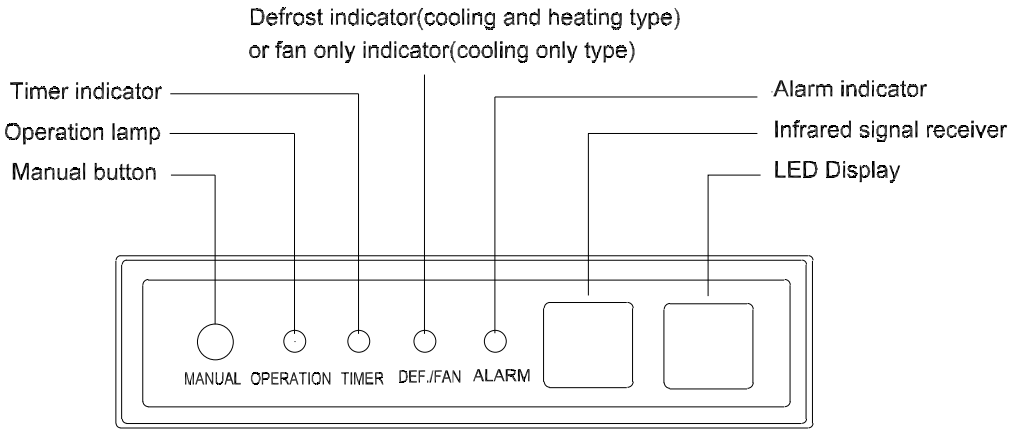

Compact Cassette Type

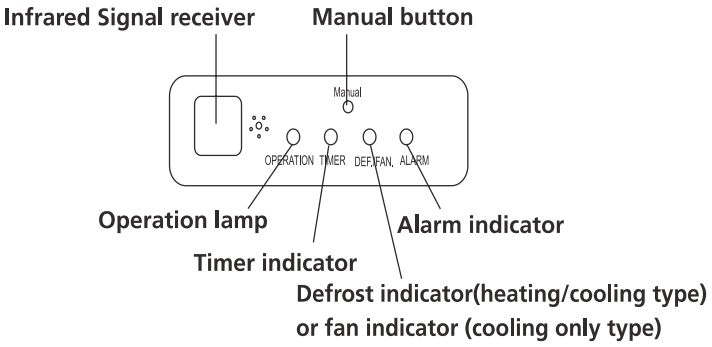

Console Type

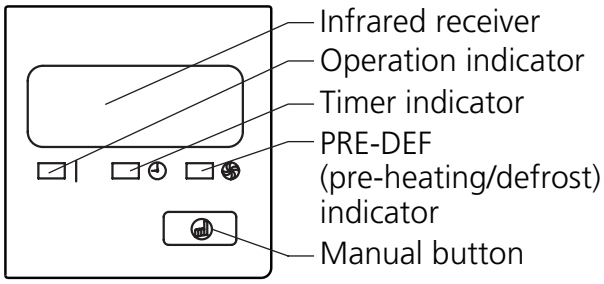

Display 1

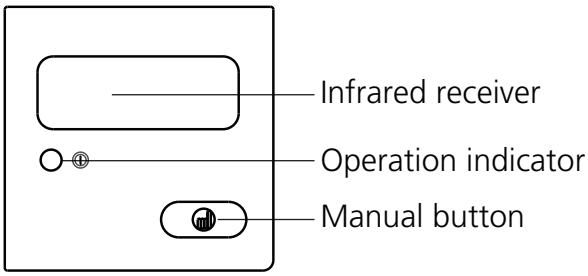

Display 2

Note: Please select the display function according to your purchase product.

2. Safety Features

Compressor three-minute delay at restart

Compressor functions are delayed for up to ten seconds upon the first startup of the unit, and are delayed for up to three minutes upon subsequent unit restarts.

Automatic shutoff based on discharge temperature

If the compressor discharge temperature exceeds a certain level for nine seconds, the compressor ceases operation.

Inverter module protection

The inverter module has an automatic shutoff mechanism based on the unit's current, voltage, and temperature. If automatic shutoff is initiated, the corresponding error code is displayed on the indoor unit and the unit ceases operation.

Indoor fan delayed operation

- When the unit starts, the louver is automatically activated and the indoor fan will operate after a period of setting time or the louver is in place.
- If the unit is in heating mode, the indoor fan is regulated by the anti-cold wind function.

Compressor preheating

Preheating is automatically activated when T4 sensor is lower than setting temperature.

Sensor redundancy and automatic shutoff

- If one temperature sensor malfunctions, the air conditioner continues operation and displays the corresponding error code, allowing for emergency use.
- When more than one temperature sensor is malfunctioning, the air conditioner ceases operation.

3. Basic Functions

3.1 Table

Functions		Cooling Mode&Heating mode		Heating Mode			
		Outdoor Fan Control		Defrosting Mode		Anti-cold Air Function	
Cases		Case 1: Compressor Frequency and T4	Case 2:T4	Case 1:T3 and T4,15 min	Case 2: T3,10 min	Case 1	Case 2
Type	Cassette	✓		✓			✓
	Console	✓		✓			✓
	Duct	✓		✓			✓
	Ceiling&floor	✓		✓			✓

Functions		Auto mode	
Cases		Case 1:	Case 2:
Type	Cassette		✓
	Console		✓
	Duct	✓	
	Ceiling&floor	✓	

Note: The detailed description of case 1 or case 2 is shown in the following function sections(from 3.4 to 3.6).

3.2 Abbreviation

Unit element abbreviations

Abbreviation	Element
T1	Indoor room temperature
T2	Coil temperature of evaporator
T3	Coil temperature of condenser
T4	Outdoor ambient temperature
TP	Compressor discharge temperature
Tsc	Adjusted setting temperature

In this manual, such as CDIFTEMP, HDIFTEMP2, TCE1, TCE2...etc., they are well-setting parameter of EEPROM.

3.3 Fan Mode

When fan mode is activated:

- The outdoor fan and compressor are stopped.
- Temperature control is disabled and no temperature setting is displayed.
- The indoor fan speed can be set to 1%~100%, or low, medium, high and auto.
- The louver operations are identical to those in cooling mode.
- Auto fan: In fan-only mode, AC operates the same as auto fan in cooling mode with the temperature set at 24°C.

3.4 Cooling Mode

3.4.1 Compressor Control

Reach the configured temperature:

1) When the compressor runs continuously for less than 120 minutes.
   - If the following conditions are satisfied, the compressor ceases operation.
     - Calculated frequency(fb) is less than minimum limit frequency(FminC).
     - Compressor runs at FminC more than ten minutes.
     - T1 is lower than or equal to (Tsc-CDIFTEMP-0.5°C)
2) When the compressor runs continuously for more than 120 minutes.
   - If the following conditions are satisfied, the compressor ceases operation.
     - Calculated frequency(fb) is less than minimum limit frequency(FminC).
     - Compressor runs at FminC more than 10 minutes.
     - When T1 is lower than or equal to (Tsc-CDIFTEMP).
3) If one of the following conditions is satisfied, not judge protective time.
   - Compressor running frequency is more than test frequency.
   - When compressor running frequency is equal to test frequency, T4 is more than 15°C or T4 fault.
   - Change setting temperature.
   - High or sleep function on/off
   - Various frequency limit shutdown occurs.

3.4.2 Indoor Fan Control

1) In cooling mode, the indoor fan operates continuously. The fan speed can be set to 1%-100%, or low, medium, high and auto.
2) Auto fan action in cooling mode:
   - Descent curve
     - When T1-Tsc is lower than or equal to 3.5°C, fan speed reduces to 80%(High);
     - When T1-Tsc is lower than or equal to 1°C, fan speed reduces to 60%(Medium);
     - When T1-Tsc is lower than or equal to 0.5°C, fan speed reduces to 40%(Low);
     - When T1-Tsc is lower than or equal to 0°C, fan speed reduces to 20%(Low);;
     - When T1-Tsc is lower than or equal to -0.5°C, fan speed reduces to 1%(Low);.
   - Rise curve
     - When T1-Tsc is higher than 0°C, fan speed increases to 20%(Low);;
     - When T1-Tsc is higher than 0.5°C, fan speed increases to 40%(Low);
     - When T1-Tsc is higher than 1°C, fan speed increases to 60%(Medium);
     - When T1-Tsc is higher than 1.5°C, fan speed increases to 80%(High);
     - When T1-Tsc is higher than 4°C, fan speed increases to 100%(High).

3.4.3 Outdoor Fan Control

Case 1:

- The outdoor unit will be run at different fan speed according to T4 and compressor frequency.
- For different outdoor units, the fan speeds are different.

Case 2:

- The outdoor unit will be run at different fan speed according to T4.
- For different outdoor units, the fan speeds are different.

3.4.4 Condenser Temperature Protection

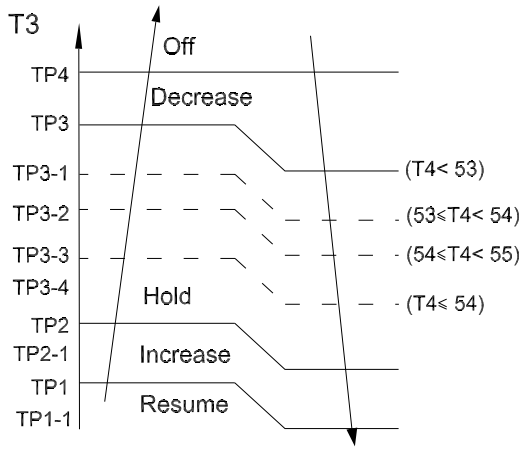

When the condenser temperature exceeds a configured value, the compressor ceases operation.

3.4.5 Evaporator Temperature Protection

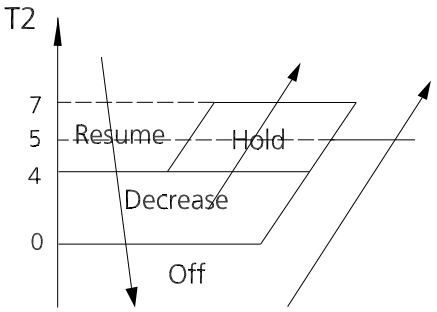

- Off: Compressor stops.
- Decrease: Decrease the running frequency to the lower level per 1 minute.
- Hold: Keep the current frequency.
- Resume: No limitation for frequency.

3.5 Heating Mode(Heat Pump Units)

3.5.1 Compressor Control

1) Reach the configured temperature

- If the following conditions are satisfied, the compressor ceases operation.
  - Calculated frequency(fb) is less than minimum limit frequency(FminH).
  - Compressor runs at FminH more than 10 minutes.
  - T1 is higher than or equal to Tsc+ HDIFTEMP2.

Note: HDIFTEMP2 is EEPROM setting parameter. It is 2°C usually.

- If one of the following conditions is satisfied, not judge protective time.
  - Compressor running frequency is more than test frequency.
  - Compressor running frequency is equal to test frequency, T4 is more than 15°C or T4 fault.
  - Change setting temperature.
  - High or sleep function on/off.

2) When the current is higher than the predefined safe value, surge protection is activated, causing the compressor to cease operations.

3.5.2 Indoor Fan Control:

1) In heating mode, the indoor fan operates continuously. The fan speed can be set to 1%-100%,or low, medium, high and auto.

- Anti-cold air function
  - The indoor fan is controlled by the indoor temperature T1 and indoor unit coil temperature T2.

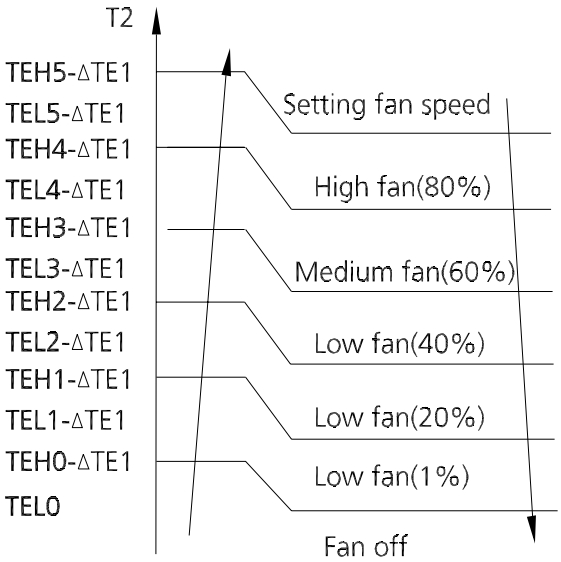

Case 1:

T1 ≥ 19°C(66.2°F)	ΔTE1=0
15°C(59°F) ≤ T1 <19°C(66.2°F)	ΔTE1=19°C−T1 (34.2°F-T1)
T1<15°C(59°F)	ΔTE1=4°C(7.2°F)

Case 2: ΔTE1=0

2) Auto fan action in heating mode:

- Rise curve
  - When T1-Tsc is higher than -1.5°C, fan speed reduces to 80%(High);
  - When T1-Tsc is higher than 0°C, fan speed reduces to 60%(Medium);
  - When T1-Tsc is higher than 0.5°C, fan speed reduces to 40%(Low);
  - When T1-Tsc is higher than 1°C, fan speed reduces to 20%(Low);.

- Descent curve
  - When T1-Tsc is lower than or equal to 0.5°C, fan speed increases to 40%(Low);
  - When T1-Tsc is lower than or equal to 0°C, fan speed increases to 60%(Medium);
  - When T1-Tsc is lower than or equal to -1.5°C, fan speed increases to 80%(high);
  - When T1-Tsc is lower than or equal to -3°C, fan speed increases to 100%(High)..

3.5.3 Outdoor Fan Control:

Case 1:

- The outdoor unit will be run at different fan speed according to T4 and compressor frequency.
- For different outdoor units, the fan speeds are different.

Case 2:

- The outdoor unit will be run at different fan speed according to T4.
- For different outdoor units, the fan speeds are different.

3.5.4 Defrosting mode

Case 1:

- The unit enters defrosting mode according to the temperature value of T3 and T4 as well as the compressor running time.
- In defrosting mode, the compressor continues to run, the indoor and outdoor motor will cease operation, the defrost light of the indoor unit will turn on, and the "dF" symbol is displayed.
- If any one of the following conditions is satisfied, defrosting ends and the machine switches to normal heating mode:
  - T3 rises above TCDE1.
  - T3 maintained above TCDE2 for 80 seconds.
  - Unit runs for 15 minutes consecutively in defrosting mode.
- If T4 is lower than or equal to -22°C and compressor running time is more than TIMING_DEFROST_TIME, if any one of the following conditions is satisfied, defrosting ends and the machine switches to normal heating mode:
  - Unit runs for 10 minutes consecutively in defrosting mode.
  - T3 rises above 10°C.

Case 2:

- The unit enters defrosting mode according to the temperature value of T3 as well as the compressor running time.
- In defrosting mode, the compressor continues to run, the indoor and outdoor motor will cease operation, the defrost light of the indoor unit will turn on, and the "dF" symbol is displayed.
- If any one of the following conditions is satisfied, defrosting ends and the machine switches to normal heating mode:
  - T3 rises above TCDE1.
  - T3 maintained above TCDE2 for 80 seconds.
  - Unit runs for 10 minutes consecutively in defrosting mode.

3.5.5 Evaporator Coil Temperature Protection

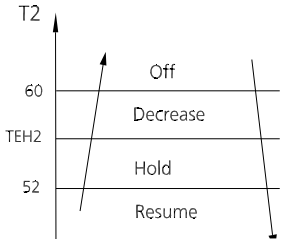

- Off: Compressor stops.
- Decrease: Decrease the running frequency to the lower level per 20 seconds.
- Hold: Keep the current frequency.
- Resume: No limitation for frequency.

3.6 Auto-mode

- This mode can be selected with the remote controller and the temperature setting can be adjusted between 16°C~30°C.

Case 1:

- In auto mode, the machine selects cooling, heating, or fan-only mode on the basis of **Δ**T (**Δ**T =T1-TS).

ΔT	Running mode
ΔT>2°C(3.6°F)	Cooling
-3℃(-5.4°F)≤ΔT≤2°C(3.6°F)	Fan-only
ΔT<-3°C(-5.4°F)	Heating*

Heating*: In auto mode, cooling only models run the fan

- Indoor fan will run at auto fan speed.
- The louver operates same as in relevant mode.
- If the machine switches mode between heating and cooling, the compressor will keep stopping for certain time and then choose mode according to **Δ**T.

Case 2:

In auto mode, the machine selects cooling, heating or fan-only mode on the basis of T1,Ts and T4.

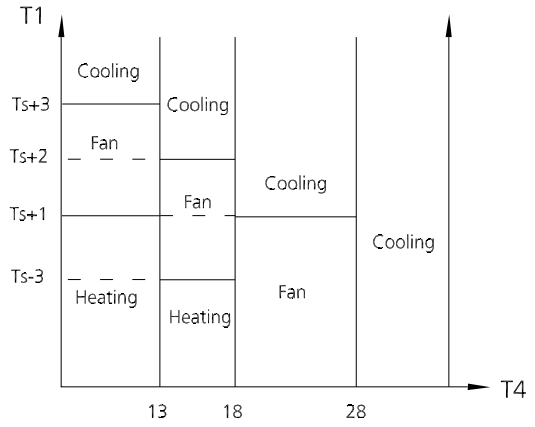

3.7 Drying mode

- In drying mode, AC operates the same as auto fan in cooling mode.
- All protections are activated and operate the same as they do that in cooling mode.
- Low Room Temperature Protection

If the room temperature is lower than 10°C, the compressor ceases operations and does not resume until room temperature exceeds 12°C.

3.8 Forced operation function

Press the AUTO/COOL button, the AC will run as below sequence:

Forced auto →Forced cooling →Off

- Forced cooling mode:

The compressor and outdoor fan continue to run and the indoor fan runs at breeze speed. After running for 30 minutes, the AC will switch to auto mode with a preset temperature of 24°C(76°F).

- Forced auto mode:

Forced auto mode operates the same as normal auto mode with a preset temperature of 24°C(76°F).

- The unit exits forced operation when it receives the following signals:
  - Switch off
  - Changes in:
    - mode
    - fan speed
    - sleep mode
    - Follow me

3.9 Timer Function

- The timing range is 24 hours.
- Timer On. The machine turns on automatically at the preset time.
- Timer Off. The machine turns off automatically at the preset time.
- Timer On/Off. The machine turns on automatically at the preset On Time, and then turns off automatically at the preset Off Time.
- Timer Off/On. The machine turns off automatically at the preset Off Time and then turns on automatically at the preset On Time.
- The timer does not change the unit operation mode. If the unit is off now, it does not start up immediately after the "timer off" function is set. When the setting time is reached, the timer LED switches off and the unit running mode remains unchanged.
- The timer uses relative time, not clock time

3.10 Sleep function

- The sleep function is available in cooling, heating, or auto mode.
- The operational process for sleep mode is as follows:
  - When cooling, the temperature rises 1°C (to not higher than 30°C/86°F) every hour. After 2 hours, the temperature stops rising and the indoor fan is fixed at low speed.
  - When heating, the temperature decreases 1°C(to not lower than 16°C/60.8°F) every hour. After 2 hours, the temperature stops decreasing and the indoor fan is fixed at low speed. Anti-cold wind function takes priority.
- The operating time for sleep mode is 8 hours, after which, the unit exits this mode.
- The timer setting is available in this mode.

3.11 Auto-Restart function

- The indoor unit has an auto-restart module that allows the unit to restart automatically. The module automatically stores the current settings and in the case of a sudden power failure, will restore those setting automatically within 3 minutes after power returns.

4. Optional Functions

4.1 8°C Heating

In heating mode, the temperature can be set to as low as 8°C, preventing the indoor area from freezing if unoccupied during severe cold weather.

4.2 Follow me

- If you press "Follow Me" on the remote, the indoor unit will beep. This indicates the follow me function is active.
- Once active, the remote control will send a signal every 3 minutes, with no beeps. The unit automatically sets the temperature according to the measurements from the remote control.
- The unit will only change modes if the information from the remote control makes it necessary, not from the unit's temperature setting.
- If the unit does not receive a signal for 7 minutes or you press "Follow Me," the function turns off. The unit regulates temperature based on its own sensor and settings.

4.3 Silence

- Press "Silence" or keep pressing Fan button for more than 2 seconds on the remote control to enable the SILENCE function. While this function is active, the compressor frequency is maintained at a lower level than F3. The indoor unit will run at faint breeze(1%), which reduces noise to the lowest possible level.
- When match with multi outdoor unit, this function is disabled.

4.4 ECO Function

- Used to enter the energy efficient mode.
  - Under cooling mode, press ECO button, the remote controller will adjust the temperature automatically to 24°C/75°F, fan speed of Auto to save energy (but only if the set temperature is less than 24°C/75°F). If the set temperature is more than 24°C/75°F and 30°C/86°F, press the ECO button, the fan speed will change to Auto, the set temperature will remain unchanged.
- When pressing the ECO button, or modifying the mode or adjusting the set temperature to less than 24°C/75°F, the AC will quit the ECO operation.
- Operation time in ECO mode is 8 hours. After 8 hours the AC quits this mode.

4.5 Electrical energy consumption control function (Optional)

Press the "Gear" button on remote controller to enter the energy efficient mode in a sequence of following:

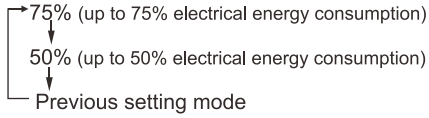

Turn off the unit or activate ECO, sleep, Super cool, 8°C Heating, Silence or self clean function will quit this function.

4.6 Breeze Away function (for some models)

- This feature avoids direct airflow blowing on the body and makes you feel indulging in silky coolness.
- NOTE: This feature is available under cooling mode, fan-only mode and drying mode.

4.7 Active Clean function

- The Active Clean Technology washes away dust, mold, and grease that may cause odors when it adheres to the heat exchanger by automatically freezing and then rapidly thawing the frost. The internal wind wheel then keeps operating to blow-dry the evaporator, thus preventing the growth of mold and keeping the inside clean.
- When this function is turned on, the indoor unit display window appears "CL", after 20 to 45 minutes, the unit will turn off automatically and cancel Active Clean function.

5. Remote Controller Functions

5.1 Infrared Wireless Remote Controller

5.1.1 (Standard for some units)

Remote Controller Specifications

Model	RG10A(B2S)/BGEF
Rated Voltage	
Reaching Distance	8m
Environment Temperature Range	-5°C~60°C(23°F~140°F)

Buttons and Functions

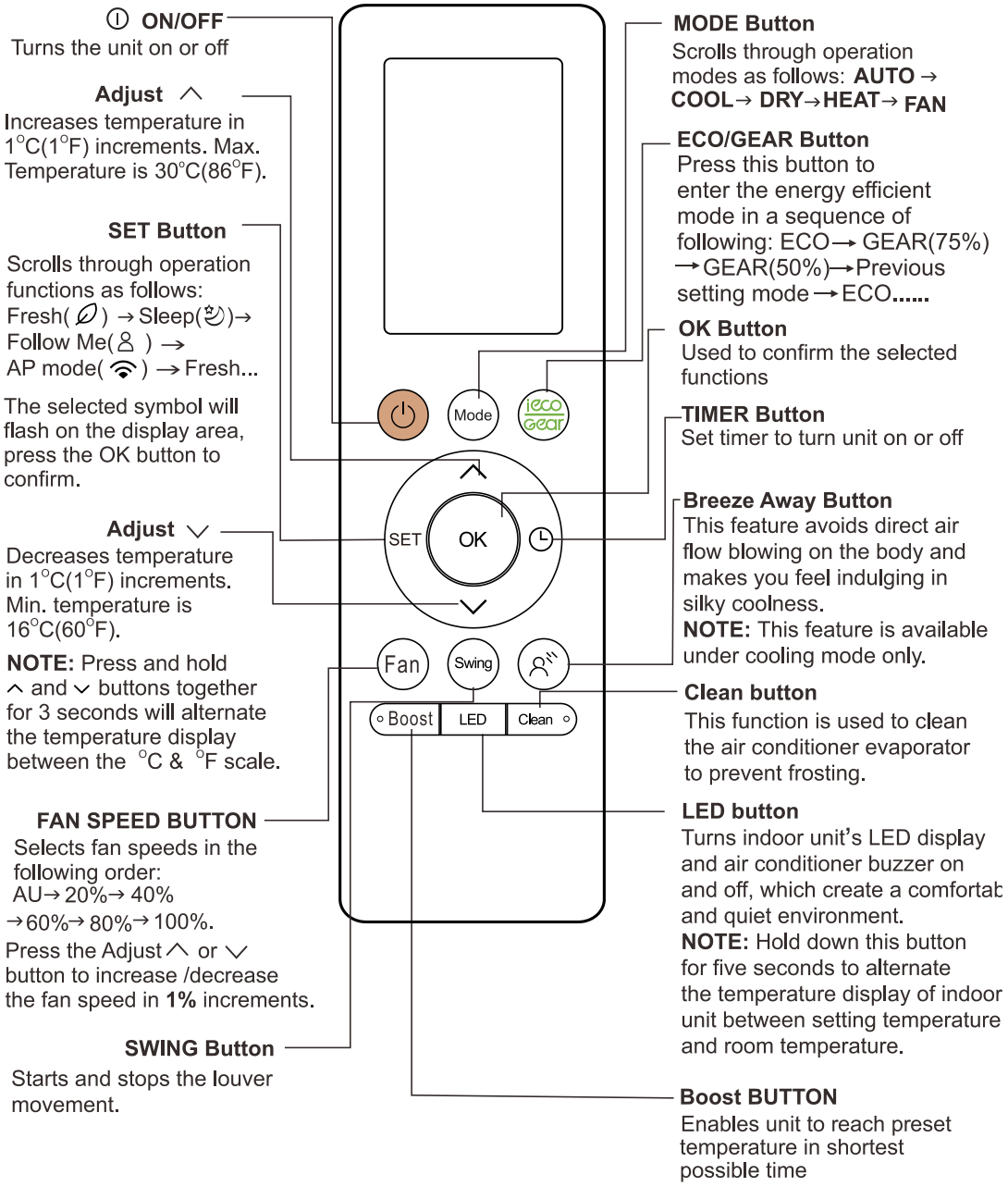

Remote LCD Screen Indicators

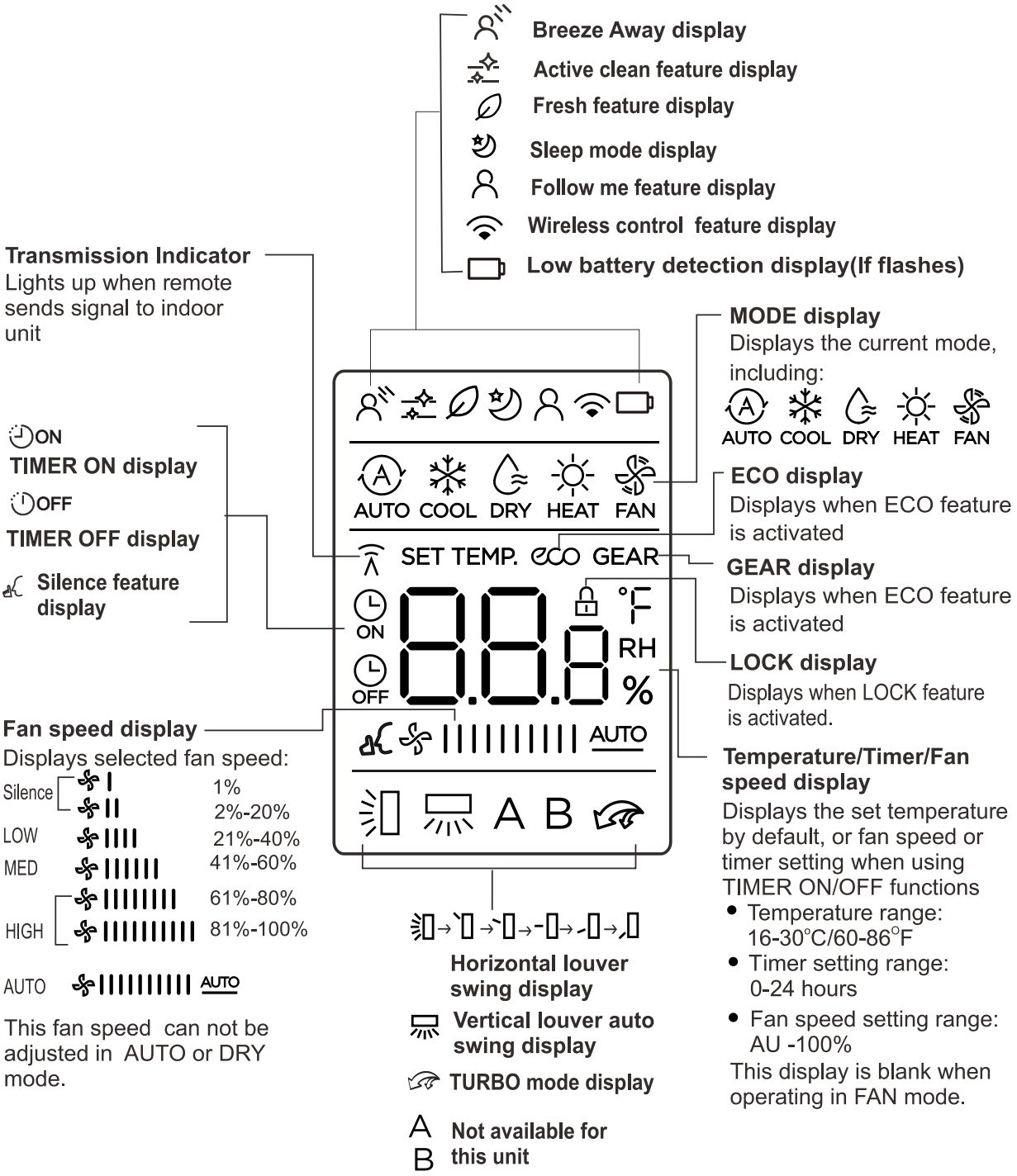

5.1.2 Remote Control (Standard for some units)

Remote Controller Specifications

Model	
Rated Voltage	3.0V (Dry batteries R03/LR03×2)
Reaching Distance	8m
Environment Temperature Range	-5°C~60°C(23°F~140°F)

Buttons and Functions

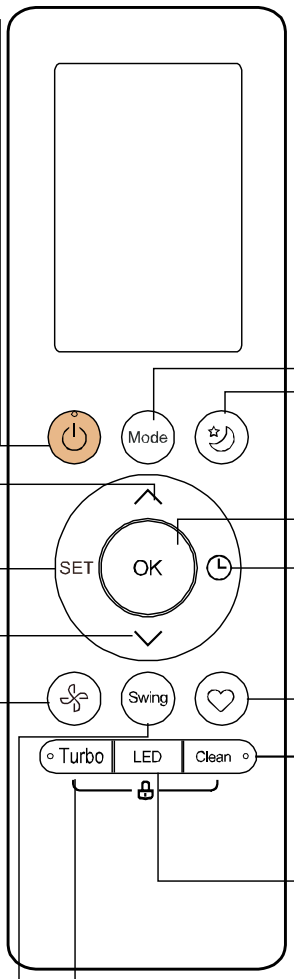

ON/OFF
Turns the unit on or off.

TEMP ∧
Increases temperate in 1°C (1°F) increments. Max. temperature is 30°C (86°F).
NOTE: Press together ∨& ∧ buttons at the same time for 3 seconds will alternate the temperature display between the °C & °F.

SET
Scrolls through operation functions as follows:
Fresh( ) → Follow Me( )
AP mode( ) → Fresh ....
The selected symbol will flash on the display area, press the OK button to confirm.

TEMP ∨
Decreases temperature in 1°C(1°F) increments. Min. temperature is 16°C(60°F).

FAN SPEED
Selects fan speeds in the following order:
AUTO → LOW→ MED→ HIGH
NOTE: Holding this button down for 2 seconds will activate Silence feature.

SWING
Starts and stops the horizontal louver movement. Hold down for 2 seconds to initiate vertical louver auto swing feature (some units).

MODE
Scrolls through operation modes as follows: **AUTO → COOL → DRY → HEAT → FAN**
NOTE: HEAT mode is not supported by the cooling only appliance.

SLEEP
Saves energy during sleeping hours.

OK
Used to confirm the selected functions

TIMER
Set timer to turn unit on or off.

SHORTCUT
Used to restore the current settings or resume previous settings.

CLEAN
Used to start/stop the Self Clean or Active Clean function.

LED
Turns indoor unit's LED display and air conditioner buzzer on ar off (modeldependent), which create a comfortable and quiet environment.

Turbo
Enables unit to reach preset temperature in shortest possible time

Remote LCD Screen Indicators

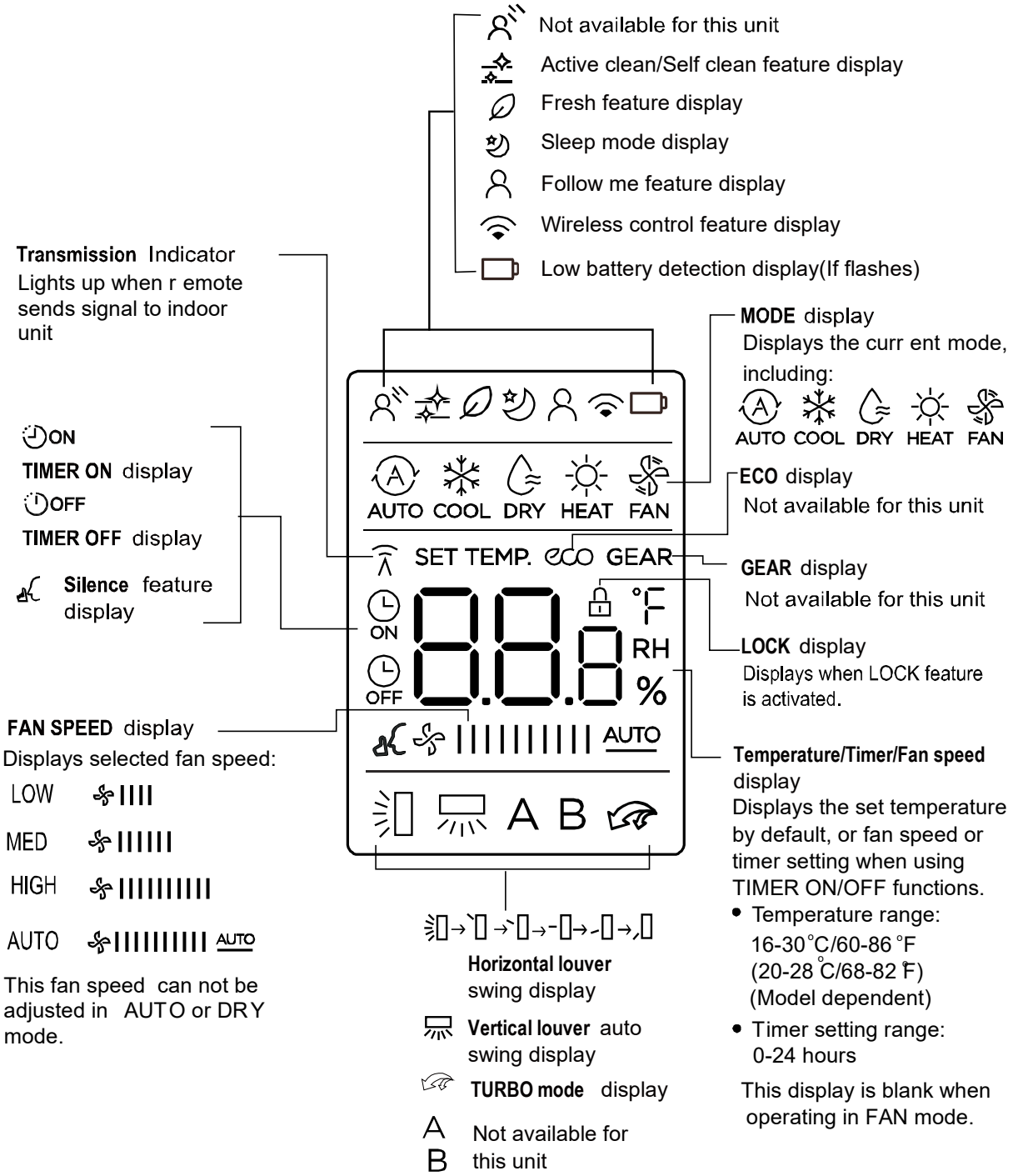

5.2 LCD Wired Remote Controller

5.2.1 LCD Wired Remote Controller

wired remote controller is standard for Duct type and is optional for some types.

i) Buttons and Functions

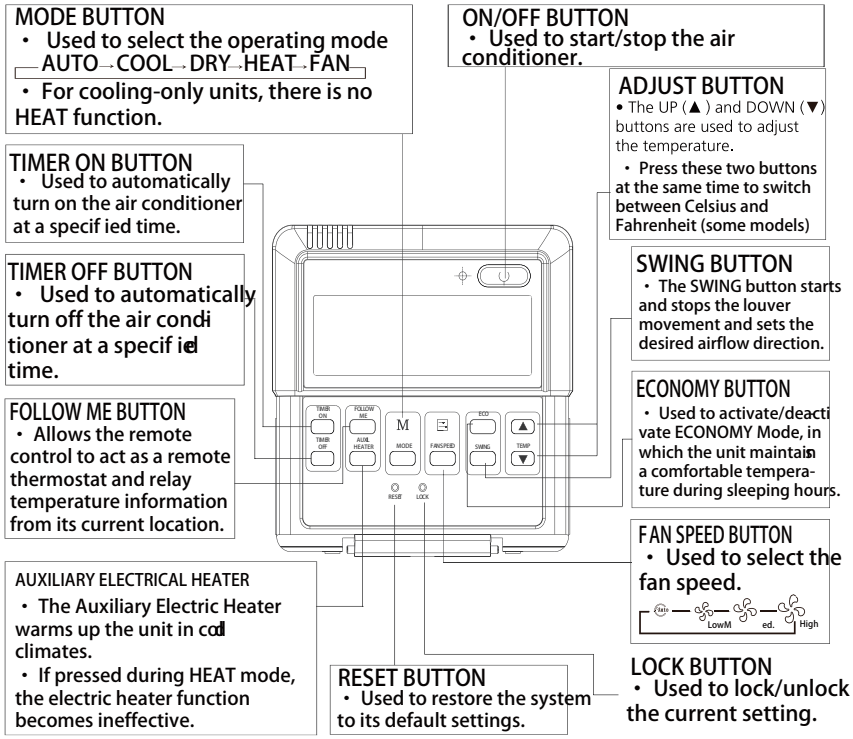

ii) LCD Screen

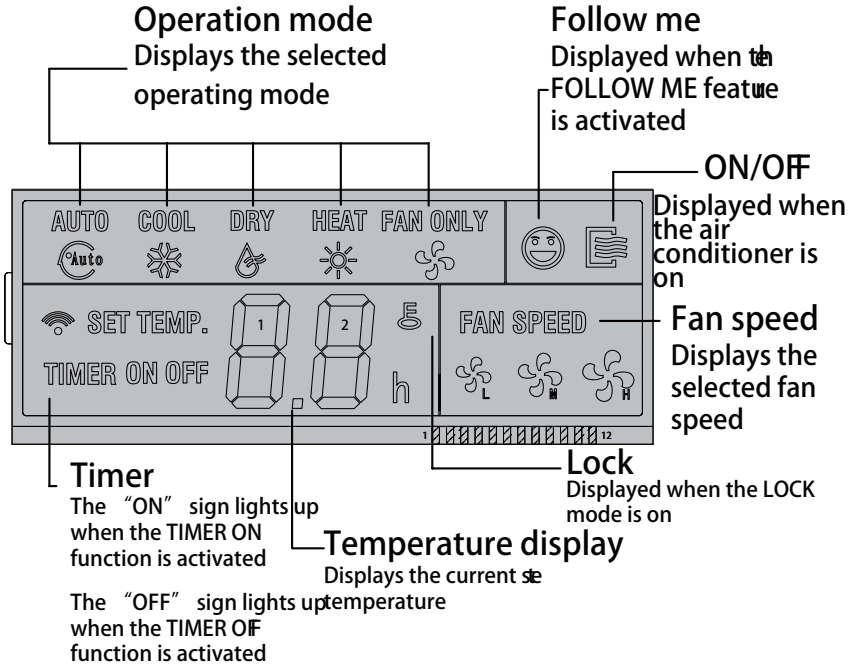

iii) Installation

- **Dimensions**

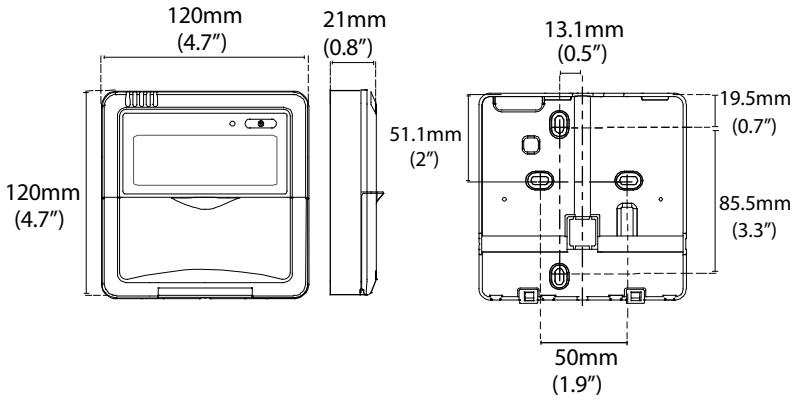

- **Wiring diagram**

  Refer to the following diagram to wire the wall-mounted remote control to the indoor unit.

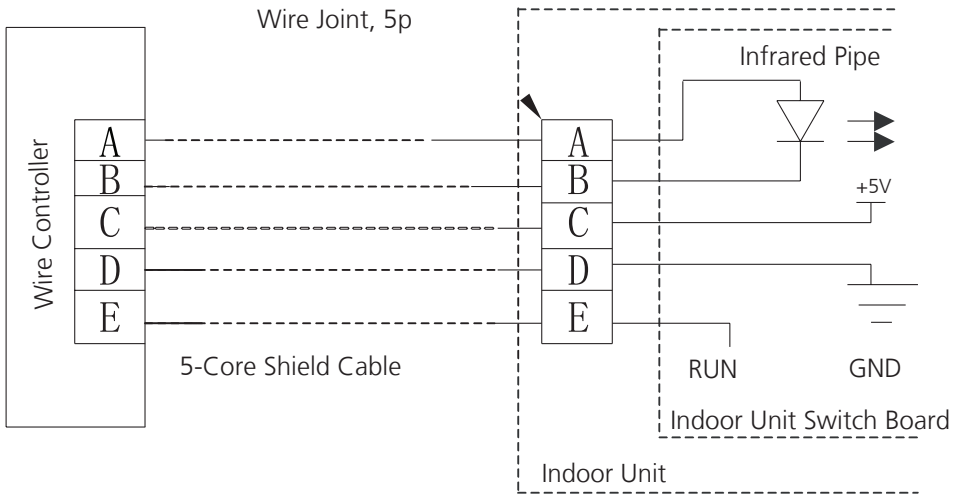

- **Installation Diagram**

Connect the wire from the display panel of the indoor unit to a connecting cable. Then connect the other side of the connecting cable to the remote control.

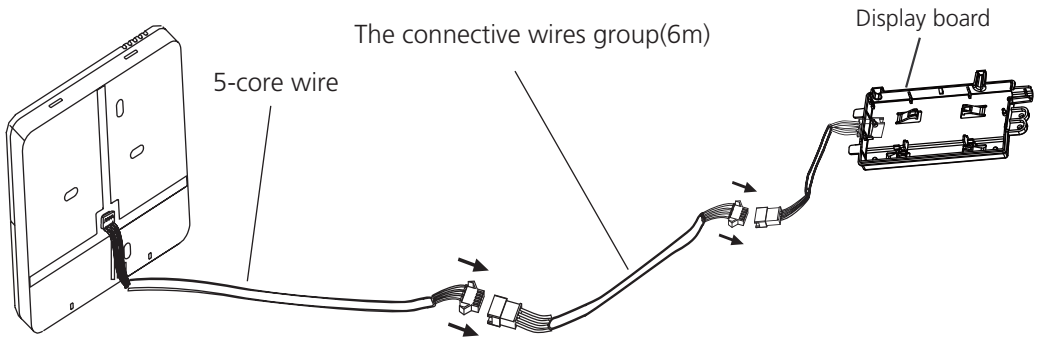

Note: Be sure to reserve a length of the connecting wire for periodic maintenance.

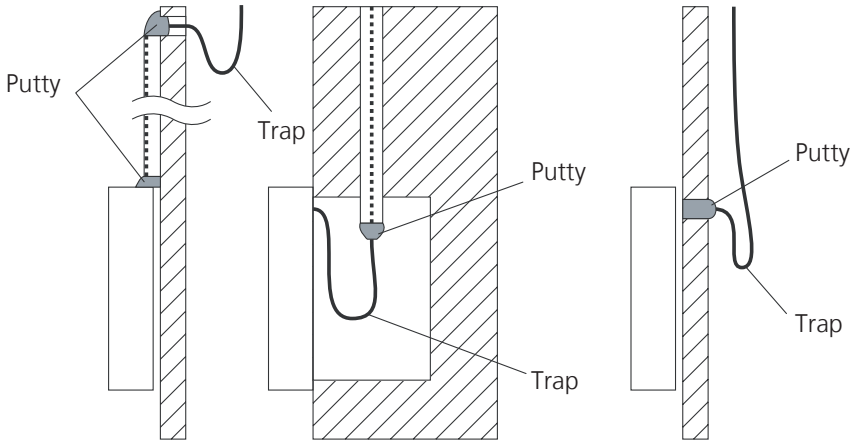

Note: DO NOT allow water to enter the remote control. Use the trap and putty to seal the wires.

- **For exposed mounting, cut holes on four of the sides according to the picture below.**

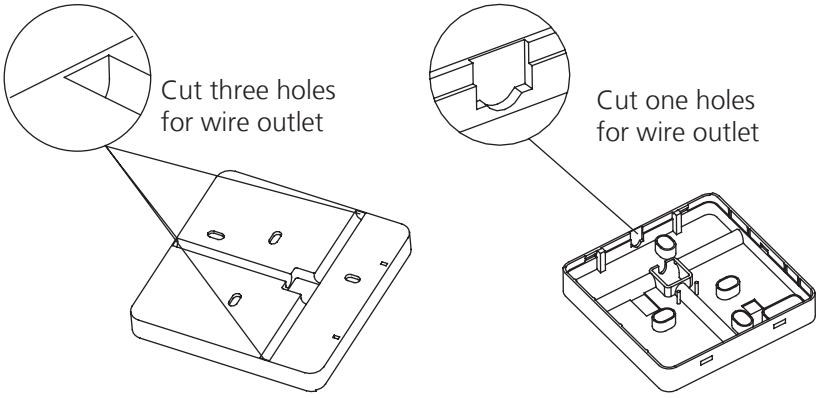

- **For shielded wiring, please refer to the picture below.**

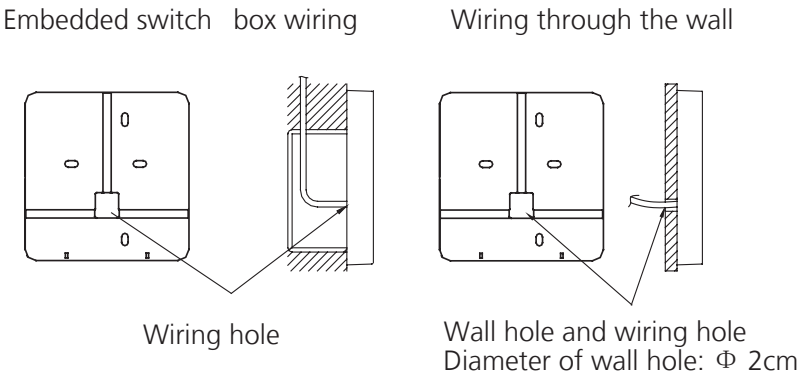

5.2.2 LCD Wired Remote Controller (Optional)

The wired remote controller is optional for some types.

i) Buttons and Functions

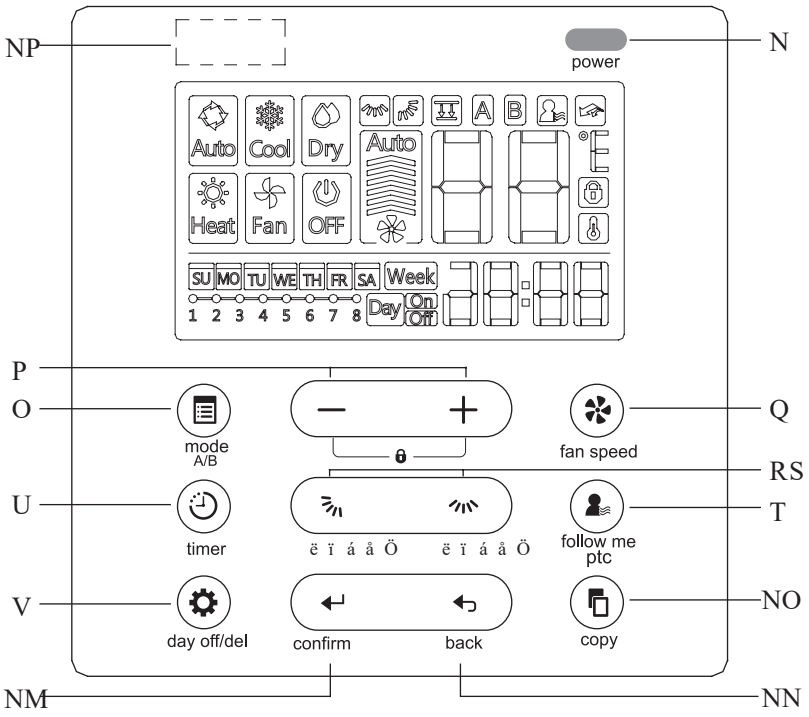

1. POWER button

Turn on of turn off the unit.

2. MODE(A/B) button

Used to select the operation mode: Auto / Cooling / Drying / Heating / Fan;

Hold to active the operation of auto-lifting panel when off

3. Adjust button

To set temperature, time and timer; set up or down the auto-lifting panel

4. FAN SPEED button

Used to select the fan speed.

5. Up-down airflow direction and swing Button

Press for adjusting the angel of louver, hold for vertical swing; individual louver control for cassette panel

6. Left-right airflow swing Button

Press for stop or start the horizontal swing

7. FOLLOW ME(PTC) button

Allows the remote control to act as a remote thermostat and send temperature information from its current location.

8. TIMER button

To set timer on and timer off time of one day

9. DELAY/DAY OFF button

To set 1 to 2 hours delay off for each day or a whole day off in a weekly timer schedule

10. CONFIRM button

To confirm an setting or call up the menu

11. BACK button

Back to previous operation or superior menu

12. COPY button

Copy timer setting of one day to another in weekly schedule setting

13 Infrared remote receiver (on some models)

ii) LCD Screen

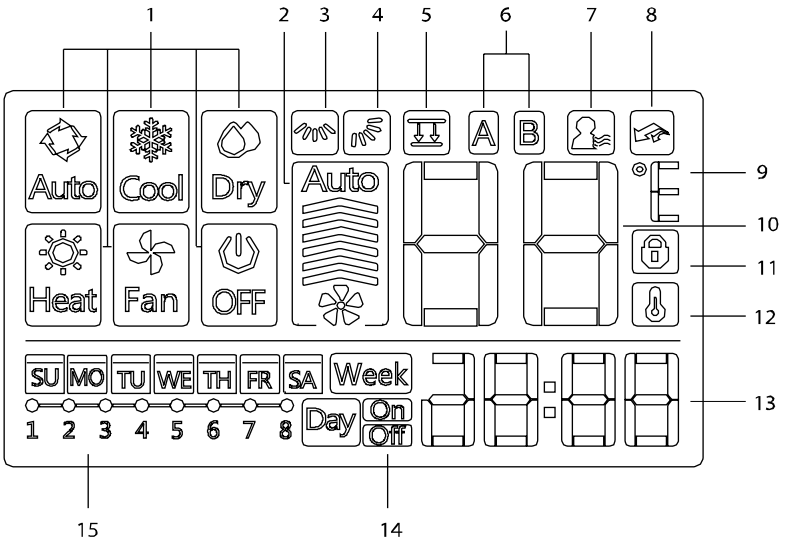

1 Operation mode indication

2 Fan speed indication

3 Left-right swing indication

4 Up-down swing indication

5 Faceplate function indication

6 Main unit and secondary unit indication

7 Follow me function indication

8 PTC function indication

9 C° / F° indication

10 Temperature display

11 Lock indication

12 Room temperature indication

13 Clock display

14 On/Off timer

15 Timer display

iii) Installation

- **Dimensions**

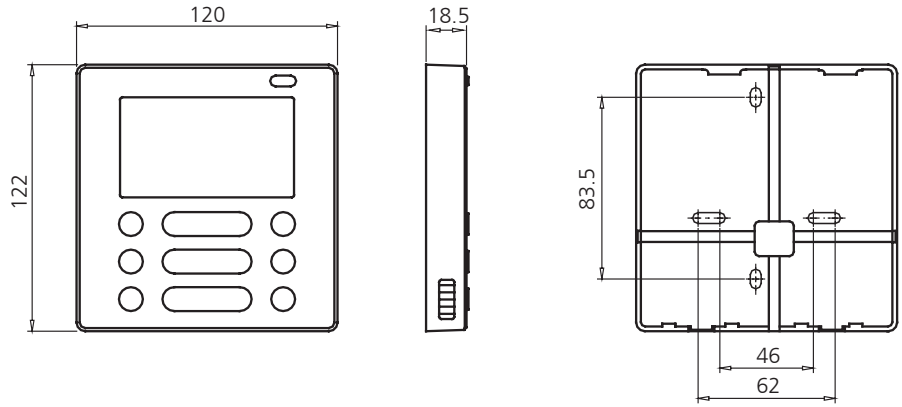

- **Wiring diagram**

Refer to the following diagram to wire the wall-mounted remote control to the indoor unit.

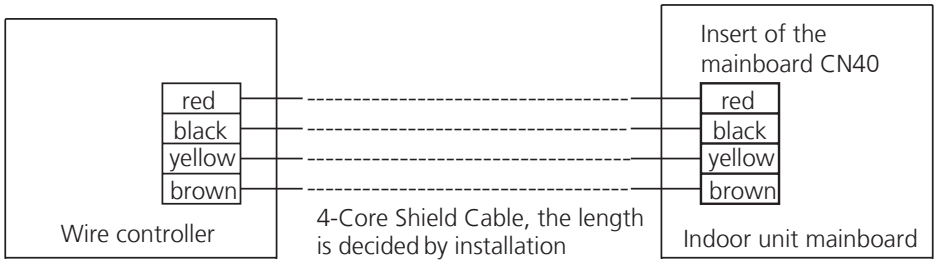

- **Installation Diagram**

Connect the female joint of wires group from the main board with the male joint of connective wires group. Then connect the other side of connective wires group with the male joint of wires group leads from wire controller.

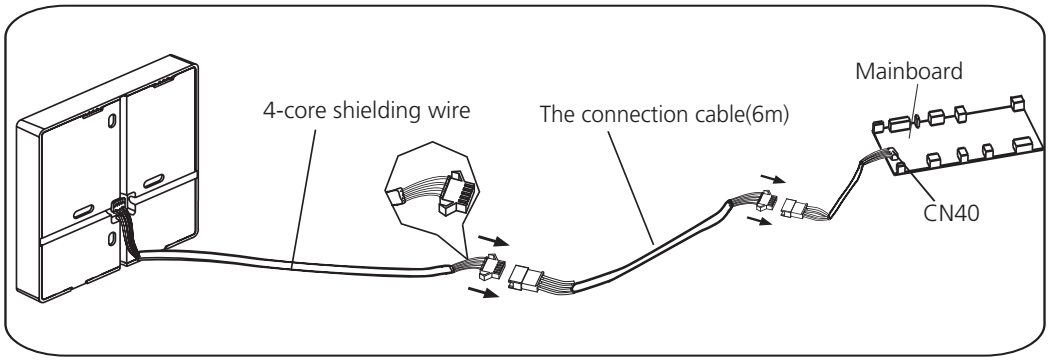

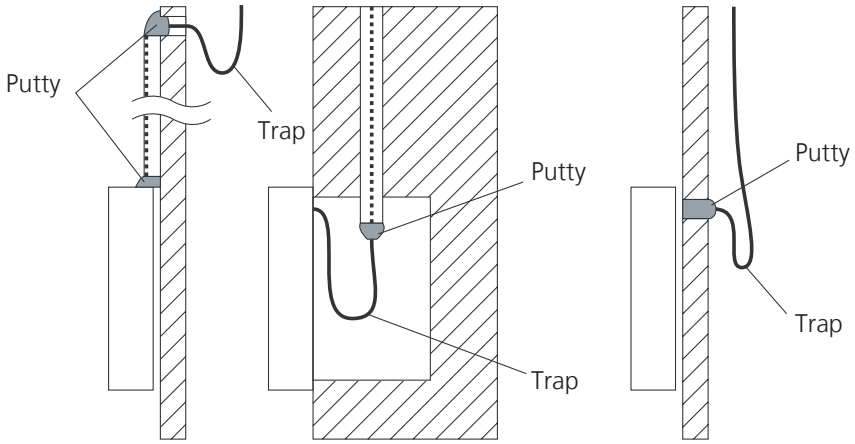

Note: DO NOT allow water to enter the remote control. Use the trap and putty to seal the wires.

- **For exposed mounting, four outletting positions. There are three need cutting.**

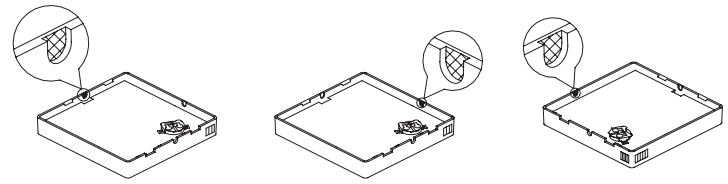

Cutting place of top side wire outlet

Cutting place of left side wire outlet

Cutting place of right side wire outlet

- **For shielded wiring, please refer to the picture below.**

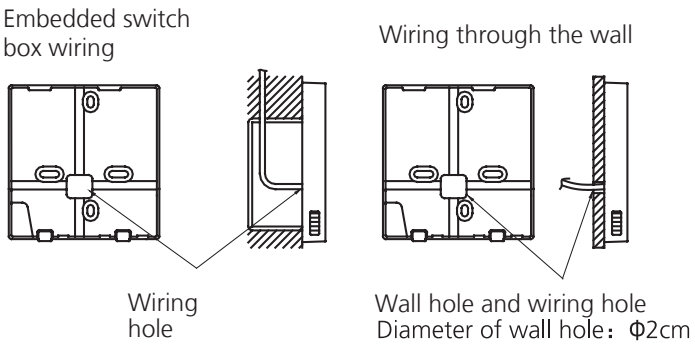

5.2.3 LCD Wired Remote Controller (Optional)

The wired remote controller is optional for some types.

i) Buttons and Functions

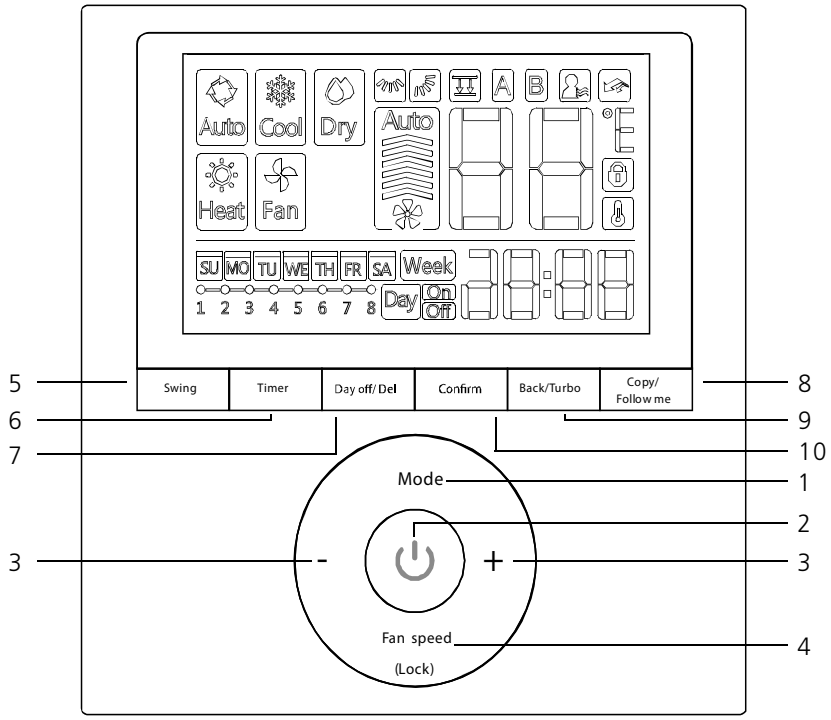

1 MODE button

Used to select the operation mode: Auto / Cooling / Drying / Heating / Fan;

Hold to active the operation of auto-lifting panel when off

2. POWER button

Turn on of turn off the unit.

3. Adjust button

To set temperature, time and timer; set up or down the auto-lifting panel

4. FAN SPEED button

Used to select the fan speed.

5. Swing Button

Press to active vertical swing, hold for horizontal swing

6. TIMER button

To set timer on and timer off time of one day

7. DELAY/DAY OFF button

To set 1 to 2 hours delay off for each day or a whole day off in a weekly timer schedule

8. COPY/FOLLOW ME button

To copy timer setting of one day to another in weekly schedule setting;

To active the follow me function while in normal operation.

9. BACK/TURBO button

Back to previous operation or superior menu

To active turbo mode while in normal operation

10. CONFIRM button

To confirm an setting or call up the superior menu

ii) LCD Screen

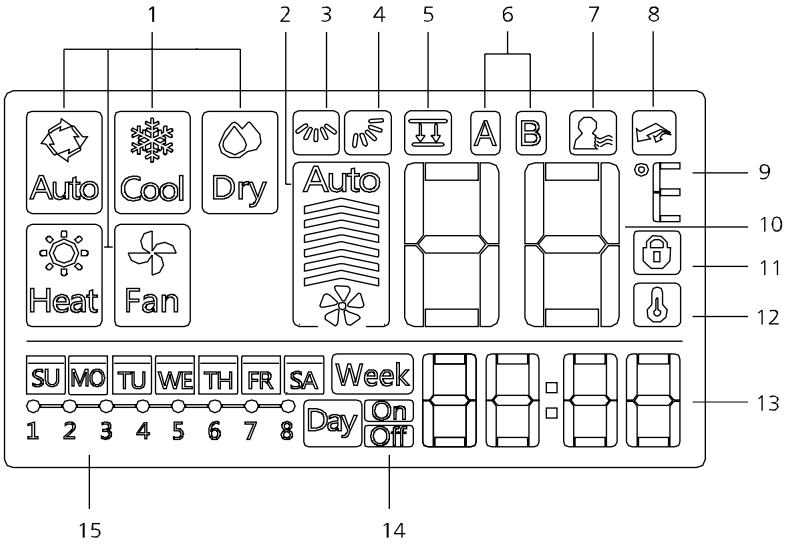

1 Operation mode indication

2 Fan speed indication

3 Left-right swing indication

4 Up-down swing indication

5 Faceplate function indication

6 Main unit and secondary unit indication

7 Follow me function indication

8 Turbo/PTC function indication

9 C° / F° indication

10 Temperature display

11 Lock indication

12 Room temperature indication

13 Clock display

14 On/Off timer

15 Timer display

iii) Installation

- **Dimensions**

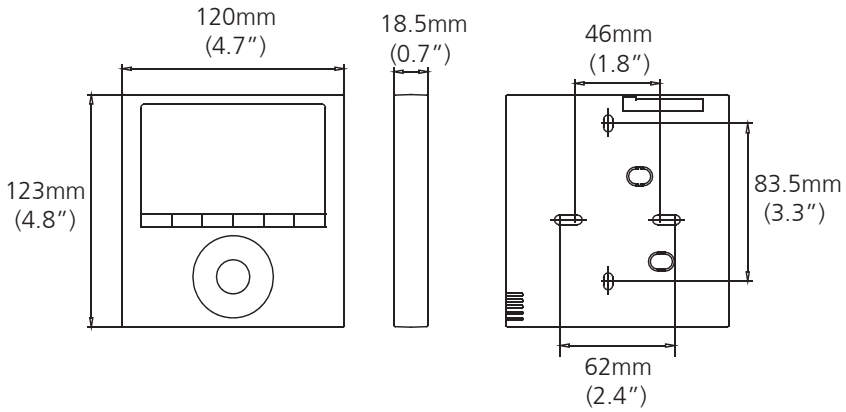

- **Wiring diagram**

1) Connection

For Cassette: The wired controller connects to main control board directly.

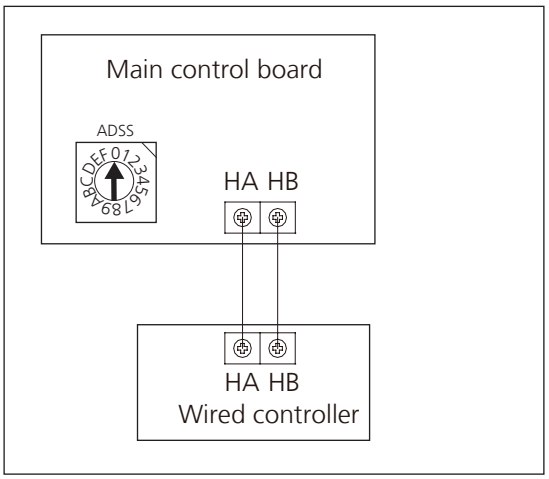

For Duct, Ceiling& floor: The wired controller connects to terminal board, terminal board connects to main control board.

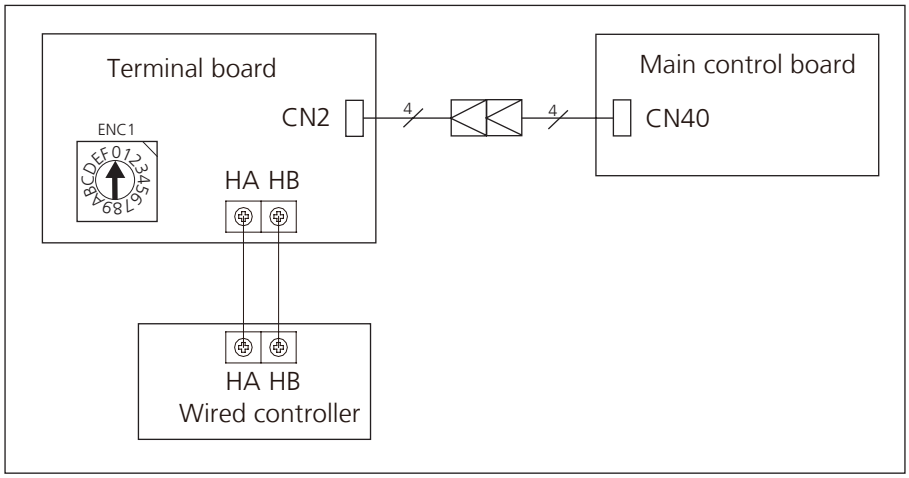

2) Address setting

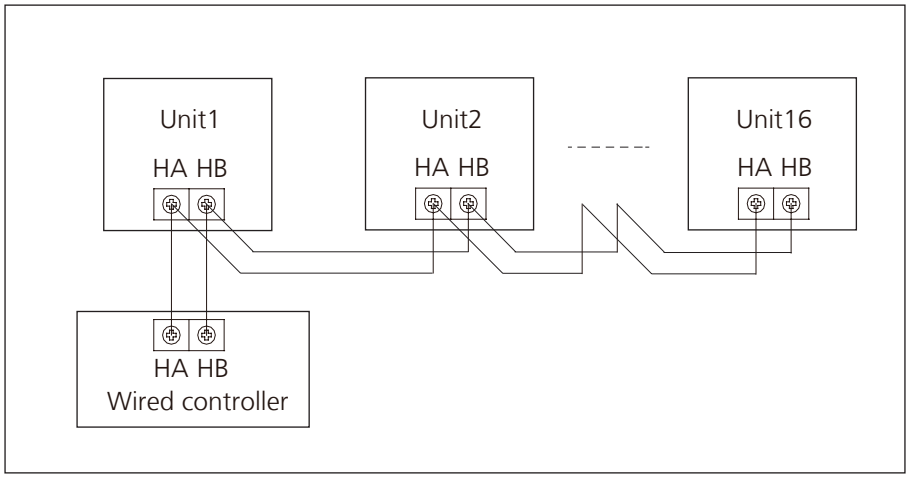

a. One non-polarity controller can control up to 16 indoor units.

b. When the non-polarity controller is connected to several units, every air-conditioner in network has only one network address to distinguish each other.

c. Address code of air-conditioner in LAN is set by code switch ENC1(Duct and Ceiling& Floor) or ADSS(Cassette) of the indoor unit, and the set range is 0-15.

d. Note: The indoor units are controlled at the same time, not independently. The purpose of setting network address is identify the unit when error occurs.

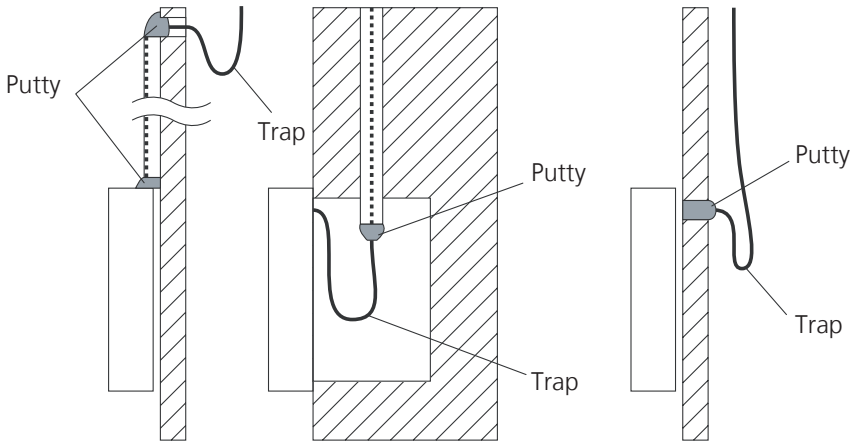

Note: DO NOT allow water to enter the remote control. Use the trap and putty to seal the wires.

- **For wiring the indoor unit, there are four methods:**
  - From the rear;
  - From the bottom;
  - From the top;
  - From the top center.

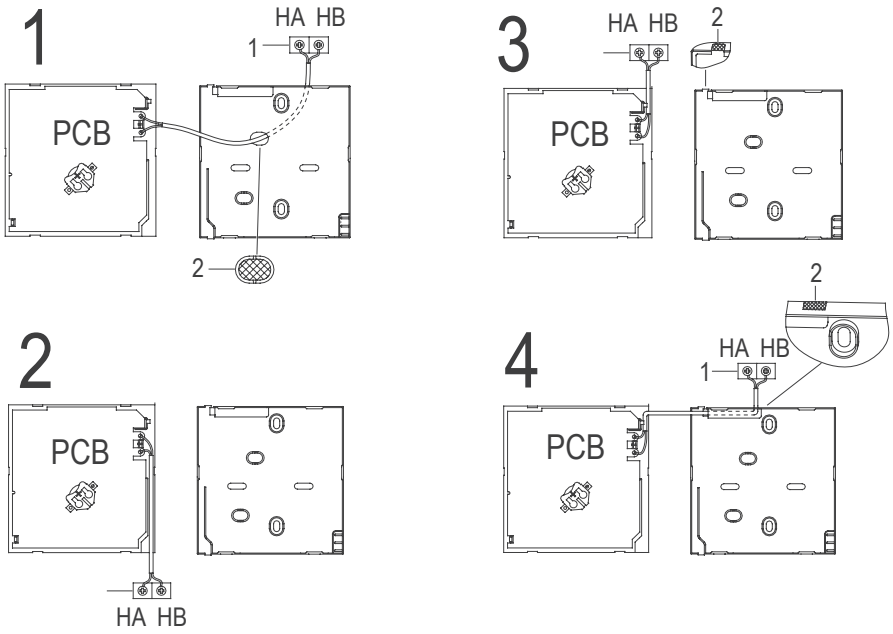

- 1: Indoor Unit.
- 2: Notch the part for the wiring to pass through with a nipper tool.
- Connect the terminals on the remote controller (HA ,HB), and the terminals of the indoor unit. (HA ,HB). (HA and HB do not have polarity.)

5.2.4 LCD Wired Remote Controller (Optional)

The wired remote controller is optional for some types.

i) Buttons and Functions

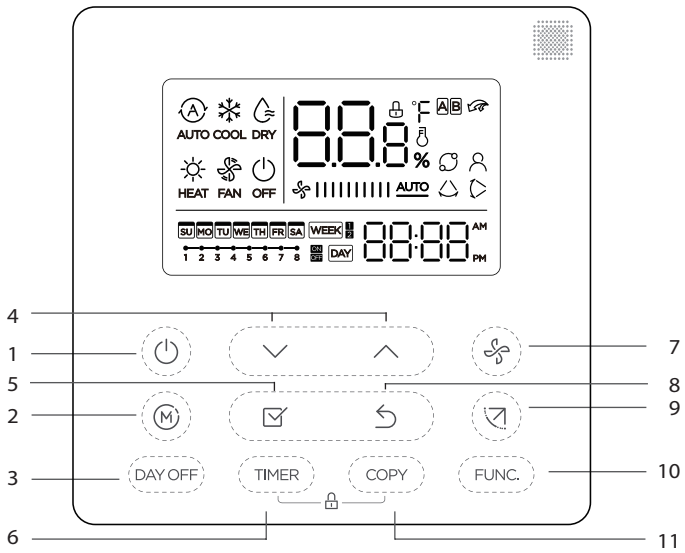

1. POWER button

Turn on of turn off the unit.

2 MODE button

Used to select the operation mode: Auto / Cooling / Drying / Heating / Fan;

3. DAY OFF/DEL button

To set 1 to 2 hours delay off for each day or a whole day off in a weekly timer schedule.

4. Adjust button

To set temperature, time and timer

5. CONFIRM button

To confirm an setting or call up the superior menu

6. TIMER button

To set timer on and timer off time of one day 7. FAN SPEED button

Used to select the fan speed.

8. BACK button

Back to previous operation or superior menu

9. Swing Button

Press to active vertical swing, hold for horizontal swing

10. FUNC. button

Press the FUNC. button to set the turbo or rotating or Ifeel function.

11. COPY button

To copy timer setting of one day to another in weekly schedule setting.

ii) LCD Screen

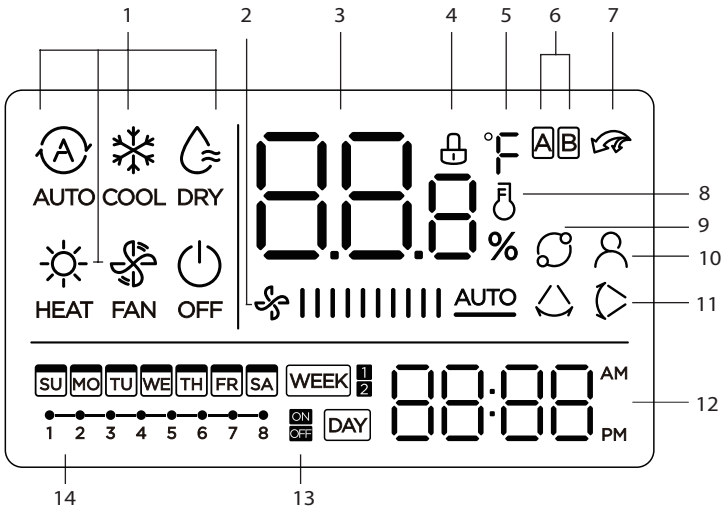

1 Operation mode indication
2 Fan speed indication
3 Temperature display
4 Lock indication
5 °C / °F indication
6 Main unit and secondary unit indication
7 Turbo function indication
8 Room temperature indication
9 Rotating indication
10 Follow Me function indication
11 Left-right swing indication (some models)
12 Clock display
13 On/Of timer
14 Timer display

iii) Installation

- **Dimensions**

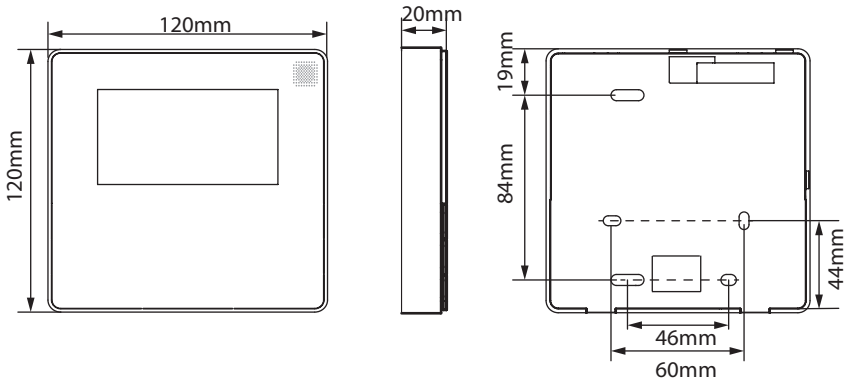

3) Connection

- **Wire with the indoor unit:**

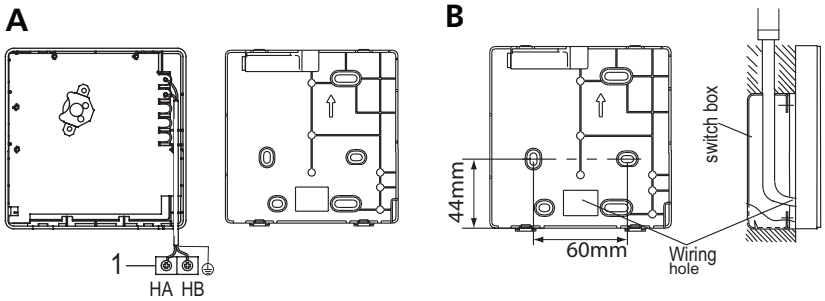

- 1: Indoor Unit.
- 2: Notch the part for the wiring to pass through with a nipper tool.
- Connect the terminals on the remote controller (HA ,HB), and the terminals of the indoor unit. (HA ,HB). (HA and HB do not have polarity.)

For some models: The wired controller connects to main control board directly.

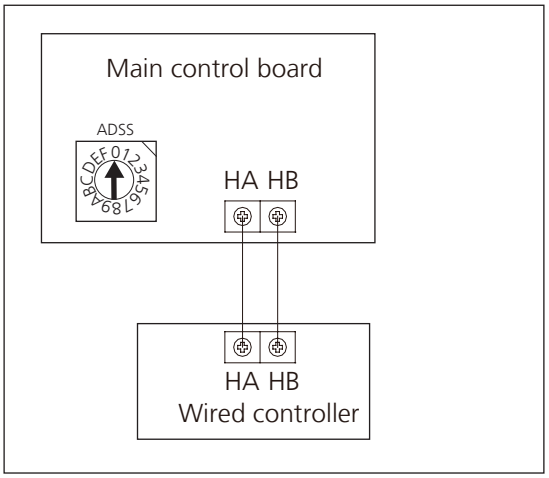

For some models: The wired controller connects to terminal board, terminal board connects to main control board.

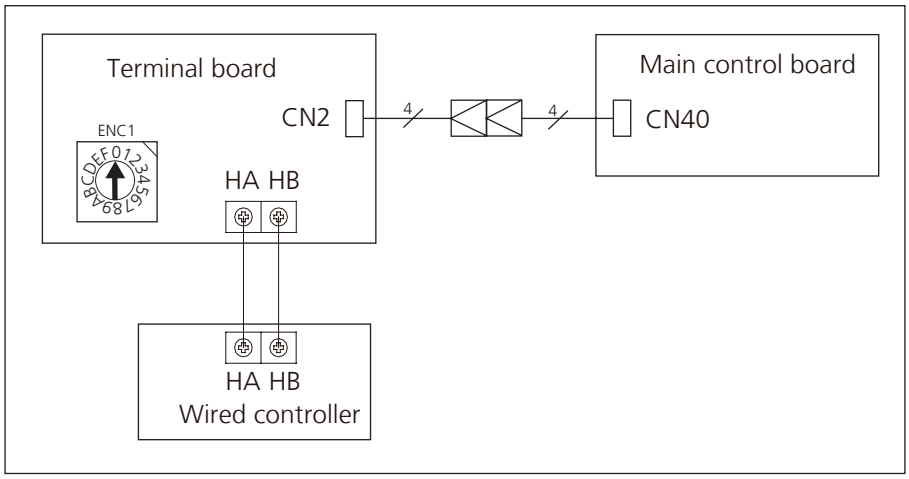

4) Address setting

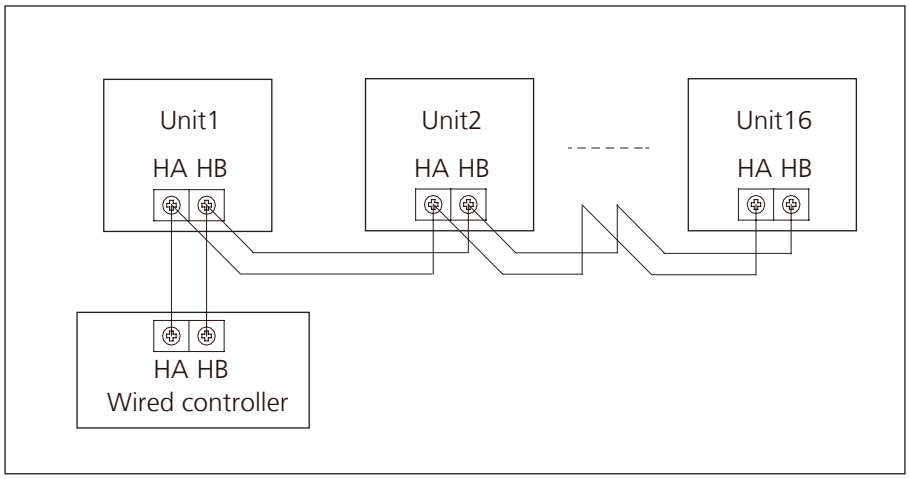

a. One non-polarity controller can control up to 16 indoor units.

b. When the non-polarity controller is connected to several units, every air-conditioner in network has only one network address to distinguish each other.

c. Address code of air-conditioner in LAN is set by code switch ENC1(Duct and Ceiling& Floor) or ADSS(Cassette) of the indoor unit, and the set range is 0-15.

d. Note: The indoor units are controlled at the same time, not independently. The purpose of setting network address is identify the unit when error occurs.

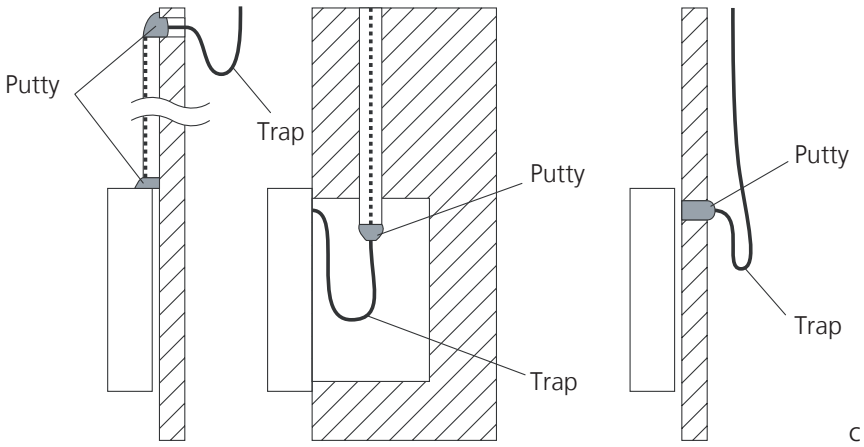

Note: DO NOT allow water to enter the remote control. Use the trap and putty to seal the wires.

5.3 Centralized Controller

1) Connection

For Light commercial air conditioner with XYE port, it can be directly connected to Centralized Controller (CCM03, CCM09).

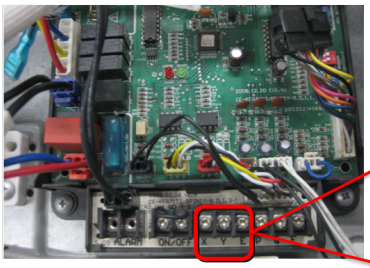

Indoor unit

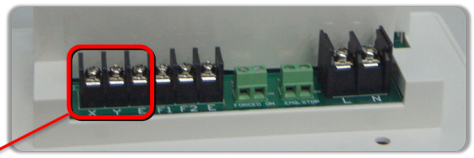

CCM03



CCM09

2) Address setting

When setting the address, please make sure the unit is powered off. The address can be set from 0 to 63 by the switch. Turn on the unit, then the address will be effective.

SWITCH	FOR CCM UNIT ADDRESS	
S2 + S1	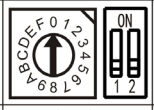	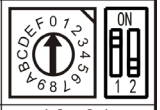
ADDRESS	0~15	16~31
Factory Setting	✓	
S2 + S1	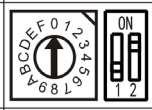	
ADDRESS	32~47	48~63
Factory Setting		

Note: For light commercial aire conditioner with XYE port, it can be also connected to BMS (Building Management System).

If there is any CAC (central air conditioner) connecting with the central controller at the same time, please set the address from largest (63,62,61…), since the CAC units could obtain address automatically from the smallest (00,01,02…)

5.4 Using the wire controller to set external static pressure

- You can use the unit's automatic airflow adjustment function to set external static pressure.
- Automatic airflow adjustment is the volume of blow-off air that has been automatically adjusted to the quantity rated.

1. Make sure the test run is done with a dry coil. If the coil is not dry, run the unit for 2 hours in FAN ONLY mode to dry the coil.

2. Check that both power supply wiring and duct installation have been completed. Check that any closing dampers are open. Check that the air filter is properly attached to the air suction side passage of the unit.

3. If there is more than one air inlet and outlet, adjust the dampers so that the airflow rate of each air inlet and outlet conforms with the designed airflow rate. Make sure the unit is in FAN ONLY mode. Press and set the airflow adjustment button on the remote control to change the airflow rate from H or L.

4. Set the parameters for automatic airflow adjustment. When the air conditioning unit is off, perform the following steps:

- When the unit is turned off, hold the MODE button and

FAN button down together for three seconds. ("AF" indicator flashes for 3 times.)

- Press " △ " or " ▽ " to select the AF.

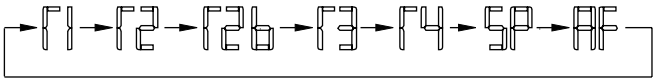

- Press "MODE". The air conditioning unit will then start the fan for airflow automatic adjustment.

After 3 to 6 minutes, the air conditioning unit stops operating once automatic airflow adjustment has finished.

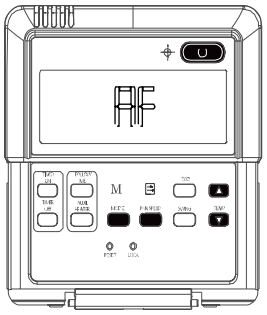

Caution: DO NOT adjust the dampers when automatic airflow adjustment is active.

Caution:

• If there is no change after airflow adjustment in the ventilation paths, be sure to reset automatic airflow adjustment.

• If there is no change to ventilation paths after airflow adjustment,contact your dealer, especially if this occurs after testing the outdoor unit or if the unit has been moved to a different location.

• Do not use automatic airflow adjustment with remote control,if you are using booster fans, outdoor air processing unit, or a HRV via duct.

• If the ventilation paths have been changed, reset airflow automatic adjustment as described from step 3 onwards.

5.5 Using the wire controller to set airflow rate

When the air conditioning unit is off, perform the following steps:

1. Press"MODE" and "FAN" for three seconds.

2. Press " △ " or " ▽ " to select the SP.

3. Press "MODE" to set the airflow rate in the range of 0~4.

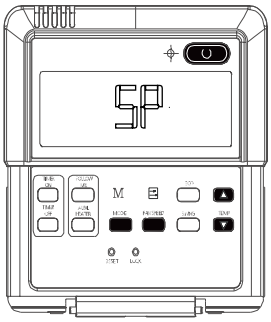

"0": No airflow change

"1"~"4":Airflow increase progressively

4. Press "ON/OFF" to finish the airflow setting.

Troubleshooting

Contents

1. Safety Caution 3

2. General Troubleshooting 4

3. Information Inquiry 6

4. Error Diagnosis and Troubleshooting Without Error Code.....13

4.1 Remote maintenance.....13

4.2 Field maintenance 14

5. Quick Maintenance by Error Code.....19

6. Troubleshooting by Error Code.....20

6.1 EH 00/EH 0A / EC 51 (EEPROM parameter error Diagnosis and Solution).....20

6.2 EL 01 (Indoor and outdoor unit communication error Diagnosis and Solution)21

6.3 EH 03 / EC 07 (Fan speed is operating outside of the normal range)/EC 71(Over Current Failure of Outdoor DC Fan Motor) Diagnosis and Solution.....23

6.4 EH 60/EH 61/EC 53/EC 52/EC 54/EC 56/EC 50 (Open circuit or short circuit of temperature sensor diagnosis and solution) 27

6.5 EL 0C (Refrigerant Leakage Detection Diagnosis and Solution) 28

6.6 EH 0E (Water-Level Alarm Malfunction Diagnosis and Solution).....29

6.7 PC 00 (IPM Malfunction or IGBT Over-strong Current Protection Diagnosis and Solution).....30

6.8 PC 01 (Over Voltage or Too Low Voltage Protection)/PC 10(Outdoor unit low AC voltage protection)/PC 11(Outdoor unit main control board DC bus high voltage protection)/PC 12(Outdoor unit main control board DC bus high voltage protection /341 MCE error) Diagnosis and Solution.....31

6.9 PC 04 (Inverter Compressor Drive Error Diagnosis and Solution) 32

Troubleshooting

Contents

6.10 PC 03/PC 31 (Low Pressure Protection Diagnosis and Solution) 33

6.11 PC 02 (Top temperature protection of compressor or High temperature protection of IPM module Diagnosis and Solution).....34

6.12 EC 0d (Outdoor unit malfunction Diagnosis and Solution).....35

6.13 PC 40(Communication error between outdoor main PCB and IPM board diagnosis and solution).....36

6.14 PC 08(Current overload protection)/PC 44(Outdoor unit zero speed protection)/ PC 46(Compressor speed has been out of control)/PC 49(Compressor overcurrent failure) diagnosis and solution 37

6.15 PC 0F(PFC module protection diagnosis and solution) 39

6.16 EC 72 (Lack phase failure of outdoor DC fan motor diagnosis and solution).40

6.17 PC 43 (Outdoor compressor lack phase protection diagnosis and solution)...41

6.18 PC 45 (Outdoor unit IR chip drive failure diagnosis and solution).....42

6.19 PC 0L (Low ambient temperature protection).....42

6.20 PC 30 (High pressure protection diagnosis and solution) 43

6.21 PC 0A (High temperature protection of condenser diagnosis and solution)...45

6.22 PC 06 (Discharge temperature protection of compressor diagnosis and solution) 46

7. Check Procedures.....47

1. Safety Caution

WARNING

Be sure to turn off all power supplies or disconnect all wires to avoid electric shock.
While checking indoor/outdoor PCB, please equip oneself with antistatic gloves or wrist strap to avoid damage to the board.

WARNING

Electricity remains in capacitors even when the power supply is off.
Ensure the capacitors are fully discharged before troubleshooting.

Test the voltage between P and N on back of the main PCB with multimeter. If the voltage is lower than 36V, the capacitors are fully discharged.

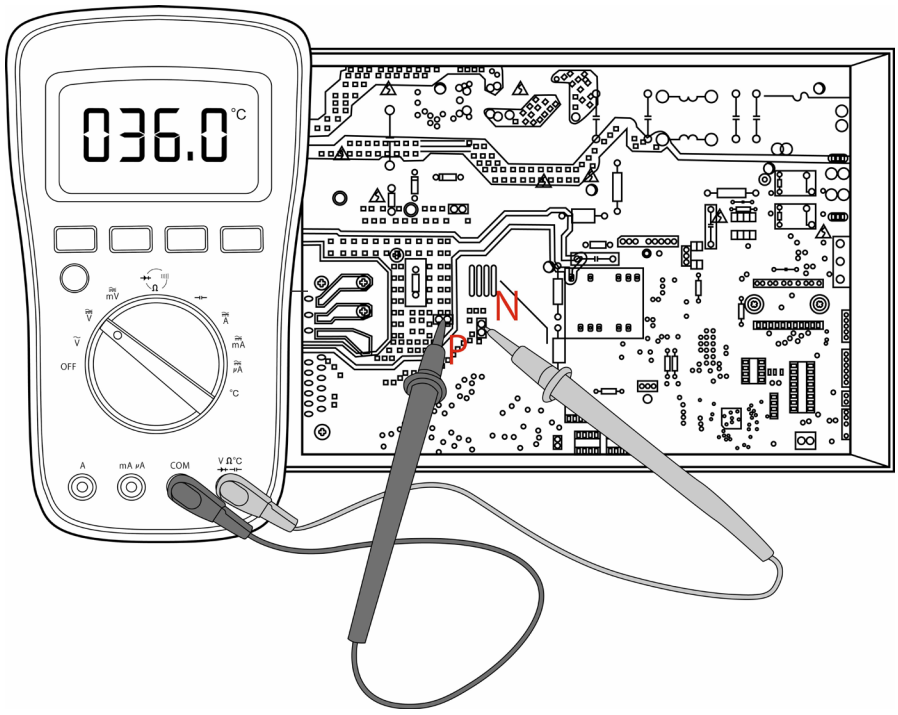

Note: This picture is for reference only. Actual appearance may vary.

2. General Troubleshooting

2.1 Error Display (Indoor Unit)

When the indoor unit encounters a recognized error, the operation lamp will flash in a corresponding series, the timer lamp may turn on or begin flashing, and an error code will be displayed. These error codes are described in the following table:

Operation Lamp	Timer Lamp	Display	Error Information	Solution
1 time	OFF	EH00/ EH0R	Indoor unit EEPROM parameter error	TS20
2 times	OFF	EL01	Indoor / outdoor unit communication error	TS21
4 times	OFF	EH03	The indoor fan speed is operating outside of the normal range(for some models)	TS23
6 times	OFF	EH60	Indoor room temperature sensor T1 is in open circuit or has short circuited	TS27
6 times	OFF	EH61	Evaporator coil temperature sensor T2 is in open circuit or has short circuited	TS27
8 times	OFF	EL0C	Refrigerant Leakage Detection(for some models)	TS27
13 times	OFF	EH0E	Water-level alarm malfunction	TS29
5 times	OFF	EC53	Outdoor room temperature sensor T4 is in open circuit or has short circuited	TS27
5 times	OFF	EC52	Condenser coil temperature sensor T3 is in open circuit or has short circuited	TS27
5 times	OFF	EC54	Compressor discharge temperature sensor TP is in open circuit or has short circuited	TS27
5 times	OFF	EC56	Evaporator coil outlet temperature sensor T2B is in open circuit or has short circuited(for free-match indoor units)	TS27
5 times	ON	EC51	Outdoor unit EEPROM parameter error	TS20
12 times	OFF	EC07	The outdoor fan speed is operating outside of the normal range(for some models)	TS23
7 times	FLASH	PC00	IPM malfunction or IGBT over-strong current protection	TS30
2 times	FLASH	PC01	Over voltage or over low voltage protection	TS31
3 times	FLASH	PC02	Top temperature protection of compressor or High temperature protection of IPM module	TS34
5 times	FLASH	PC04	Inverter compressor drive error	TS32
7 times	FLASH	PC03	High pressure protection or low pressure protection (for some models)	TS43/ TS33
14 times	OFF	EC0d	Outdoor unit malfunction	TS35
1 time	ON	--	Indoor units mode conflict(match with multi outdoor unit) (for some models)	--

For other errors:

The display board may show a garbled code or a code undefined by the service manual. Ensure that this code is not a temperature reading.

Troubleshooting:

Test the unit using the remote control. If the unit does not respond to the remote, the indoor PCB requires replacement. If the unit responds, the display board requires replacement.

LED flash frequency:

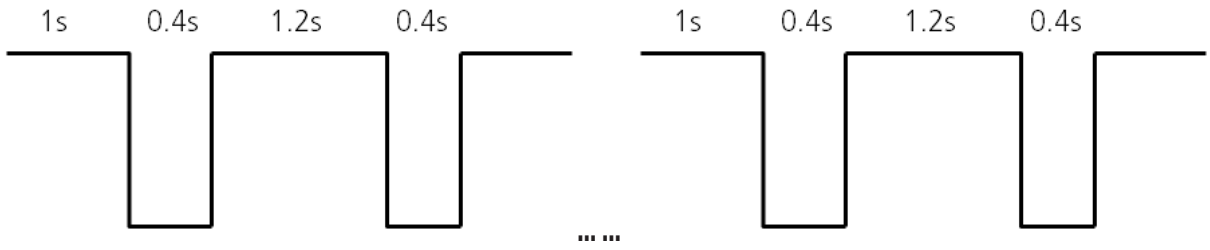

2.2 Error Display (For Some Outdoor Units)

Display	Malfunction or Protection	Solution
EC51	Outdoor EEPROM malfunction	TS20
Eb01	Indoor / outdoor units communication error	TS21
PC40	Communication malfunction between IPM board and outdoor main board	TS36
PC08	Outdoor overcurrent protection	TS37
PC10	Outdoor unit low AC voltage protection	TS31
PC11	Outdoor unit main control board DC bus high voltage protection	TS31
PC12	Outdoor unit main control board DC bus high voltage protection /341 MCE error	TS31
PC00	IPM module protection	TS30
PC0F	PFC module protection	TS39
EC71	Over current failure of outdoor DC fan motor	TS23
EC72	Lack phase failure of outdoor DC fan motor	TS40
EC07	Outdoor fan speed has been out of control	TS23
PC43	Outdoor compressor lack phase protection	TS41
PC44	Outdoor unit zero speed protection	TS37
PC45	Outdoor unit IR chip drive failure	TS42
PC46	Compressor speed has been out of control	TS37
PC49	Compressor overcurrent failure	TS37
PC30	High pressure protection	TS43
PC31	Low pressure protection	TS33
PC0R	High temperature protection of condenser	TS45
PC06	Temperature protection of compressor discharge	TS46
PC02	Top temperature protection of compressor	TS34
EC52	Condenser coil temperature sensor T3 is in open circuit or has short circuited	TS27
EC53	Outdoor room temperature sensor T4 is in open circuit or has short circuited	TS27
EC54	Compressor discharge temperature sensor TP is in open circuit or has short circuited	TS27
EC50	Open or short circuit of outdoor unit temperature sensor(T3,T4.TP)	TS27
PC0L	Low ambient temperature protection	TS42

3. Information Inquiry

Duct type &Floor ceiling Type:

- To enter information inquiry status, complete the following procedure within ten seconds:
  - Press LED(or DO NOT DISTURB) 3 times.
  - Press SWING(or AIR DIRECTION) 3 times.
- Finish 1 and 2 within 10 seconds, you will hear beeps for two seconds, which means the unit goes into parameter checking mode.
- Use the LED(or DO NOT DISTURB) and SWING(or AIR DIRECTION) buttons to cycle through information displayed.
- Pressing LED(or DO NOT DISTURB) will display the next code in the sequence. Pressing SWING(or AIR DIRECTION) will show the previous.
- The following table shows information codes. The screen will display this code for two seconds, then the information for 25 seconds.

Displayed code	Explanation	Displayed value	Meaning	Additional Notes
T1	Room temperature	-1F,-1E,-1d,-1c,-1b,-1A -19—99 A0,A1,…A9 b0,b1,…b9 c0,c1,…c9 d0,d1,…d9 E0,E1,…E9 F0,F1,…F9	-25,-24,-23,-22,-21,-20 -19—99 100,101,…109 110,111,…119 120,121,…129 130,131,…139 140,141,…149 150,151,…159	1. All displayed temperatures use actual values. 2. All temperatures are displayed in °C regardless of remote used. 3. T1, T2, T3, T4, and T2B display ranges from -25 to 70 °C. TP display ranges from -20 to 130 °C. 4. The frequency display ranges from 0 to 159HZ. 5. If the actual values exceed or fall short of the defined range, the values closest to the maximum and minimum values will be displayed.
T2	Indoor coil temperature			
T3	Outdoor coil temperature			
T4	Ambient temperature			
TB	Outlet temperature of indoor coil			
TP	Discharge temperature			
TH	Suction temperature			
FT	Targeted frequency			
FR	Actual frequency			
IF	Indoor fan speed	0 1,2,3,4	OFF Low speed, Medium speed, High speed, Turbo.	N/A Used for some large capacity motors.
OF	Outdoor fan speed	14-FF	Actual fan speed is equal to the display value converted to decimal value and multiplied by 10. This is measured in RPM.	Used for some small capacity motors. The display value is 14-FF (hexadecimal). The corresponding fan speed ranges from 200 to 2550RPM.
LR	EXV opening angle	0-FF	Actual EXV opening value is equal to the display value converted to decimal value and then multiplied by 2.	-
CT	Compressor continuous running time	0-FF	0-255 minutes	If the actual value exceeds or falls short of the defined range, the value closest to the maximum and minimum will be displayed.
ST	Causes of compressor stop	0-99	For a detailed explanation, contact technical support.	-

Displayed code	Explanation	Displayed value	Meaning	Additional Notes
A0	Reserved	0-FF	-	-
A1				
b0				
b1				
b2				
b3				
b4				
b5				
b6		0-63		
du		0-FF		
Rc				
Uo				
Td				
nA				
CF				
PA				
Po				

Console Type& Compact Cassette Type:

- To enter information inquiry status, complete the following procedure within ten seconds:
  - Press LED(or DO NOT DISTURB) 3 times.
  - Press SWING(or AIR DIRECTION) 3 times.
- Finish 1 and 2 within 10 seconds, you will hear beeps for two seconds, which means the unit goes into parameter checking mode.
- Use the LED(or DO NOT DISTURB) and SWING(or AIR DIRECTION) buttons to cycle through information displayed.
- Pressing LED(or DO NOT DISTURB) will display the next code in the sequence. Pressing SWING(or AIR DIRECTION) will show the previous.
- The following table shows information codes. The screen will display this code for two seconds, then the information for 25 seconds.

Displayed code	Explanation	Additional Notes
Error code	Error code	Refer to next list of error code
T1	Room temperature	T1 temperature
T2	Indoor coil temperature	T2 temperature
T3	Outdoor coil temperature	T3 temperature
T4	Ambient temperature	T4 temperature
TP	Discharge temperature	TP temperature
FT	Targeted frequency	Targeted Frequency
Fr	Actual frequency	Actual Frequency
dL	Compressor current	N/A
Uo	Outdoor AC voltage	N/A
Sn	Indoor capacity test	N/A
od	Running mode	
Pr	Outdoor fan speed	Outdoor fan speed=value*8
Lr	EXV opening angle	EXV opening angle-value*8
ir	Indoor fan speed	Indoor fan speed=value*8
HU	Indoor humidity	N/A
TT	Adjusted setting temperature	N/A
DT	Reserve	N/A
iF	Reserve	N/A
nR	Reserve	N/A
oT	GA algorithm frequency	N/A

Super-slim Four-way Cassette Type:

- To enter engineer mode, in power-on or standby mode, and in non-locked state, press the key combination "ON/OFF + Air Speed" for 7s:
- After entering the engineer mode, the remote control will display icons of "Auto, Cool, Dry, Heat", and the Battery icon; at the same time, it will also display the numeric code of the current engineer mode (for the initial engineer mode, the numeric code displayed is 0), and all other icons are inactive.
- In engineer mode, the value of the current numeric code can be adjusted circularly through the Up/Down key, with the setting range of 0 to 30.

Code	Query Content	Additional Notes
0	Error code	Refer to next list of error code
1	Room temperature	T1 temperature
2	Indoor coil temperature	T2 temperature
3	Outdoor coil temperature	T3 temperature
4	Ambient temperature	T4 temperature
5	Discharge temperature	TP temperature
6	Compressor Target Frequency FT	Targeted Frequency
7	Compressor Running Frequency Fr	Actual Frequency
8	Unit Current dL	N/A
9	Outdoor AC Voltage Uo	N/A
10	Current indoor capacity test state Sn	N/A
11	Runnig mode od	
12	Set Speed Pr of the outdoor fan	Outdoor fan speed=value*8
13	Opening Lr of EEV	EXV opening angle-value*8
14	Actual Running Speed ir of the indoor fan	Indoor fan speed=value*8
15	Indoor Humidity Hu	N/A
16	Set Temperature TT after compensation	N/A
17		N/A
18		N/A
19	/	N/A
20	Indoor Target Frequency oT	N/A
21	Reserve	
22		
23		
24		
25		
26		
27		
28		
29		
30		

Exit of engineer mode:
1)In engineer mode, press the key combination of "On/Off + Air speed" for 2s;

2)The engineer mode will be exited if there are no valid key operations for continuous 60s.

Error code of engineer mode

Display	Error Information
EH 00/EH 0R	Indoor unit EEPROM parameter error
EL 01	Indoor / outdoor unit communication error
EH bR	Communication error between indoor unit and indoor external fan module
EH 30	Parameters error of indoor external fan
EH 35	Phase failure of indoor external fan
EH 36	Indoor external fan current sampling bias fault
EH 37	Indoor external fan zero speed failure
EH 38	Indoor external fan stall failure
EH 39	Out of step failure of indoor external fan
EH 3R	Low voltage protection of indoor external fan DC bus
EH 3b	Indoor external fan DC bus voltage is too high fault
EH 3E	Indoor external fan overcurrent fault
EH 3F	Indoor external fan module protection/hardware overcurrent protection
EH 03	The indoor fan speed is operating outside of the normal range
EC 51	Outdoor unit EEPROM parameter error
EC 52	Condenser coil temperature sensor T3 is in open circuit or has short circuited
EC 53	Outdoor room temperature sensor T4 is in open circuit or has short circuited
EC 54	Compressor discharge temperature sensor TP is in open circuit or has short circuited
EC 55	IGBT temperature sensor TH is in open circuit or has short circuited
EC 0d	Outdoor unit malfunction
EH 60	Indoor room temperature sensor T1 is in open circuit or has short circuited
EH 61	Evaporator coil temperature sensor T2 is in open circuit or has short circuited
EC 71	Outdoor external fan overcurrent fault
EC 75	Outdoor external fan module protection/hardware overcurrent protection
EC 72	Outdoor external fan phase failure
EC 74	Outdoor external fan current sampling bias fault
EC 73	Zero speed failure of outdoor unit DC fan
EC 07	The outdoor fan speed is operating outside of the normal range(
EL 0C	Refrigerant leak detected
EH 0E	Water-level alarm malfunction
PC 00	IPM malfunction or IGBT over-strong current protection
PC 10	Over low voltage protection
PC 11	Over voltage protection
PC 12	DC voltage protection
PC 02	Top temperature protection of compressor or High temperature protection of IPM module

PC40	Communication error between outdoor main chip and compressor driven chip
PC41	Current Input detection protection
PC42	Compressor start error
PC43	Lack of phase (3 phase) protection
PC44	Outdoor unit zero speed protection
PC45	341PWM error
PC46	Compressor speed malfunction
PC49	Compressor over current protection
PC06	Compressor discharge temperature protection
PC08	Outdoor current protection
PH09	Anti-cold air in heating mode
PC0F	PFC module malfunction
PC30	System overpressure protection
PC31	System pressure is too low protection
PC03	Pressure protection
PC0L	Outdoor low ambient temperature protection
PH90	Evaporator coil temperature over high protection
PH91	Evaporator coil temperature over low Protection
PC0R	Condenser high temperature protection
PH0C	Indoor unit humidity sensor failure
LH00	Frequency limit caused by T2
LH30	Indoor external fan current limit
LH31	Indoor external fan voltage limit
LC01	Frequency limit caused by T3
LC02	Frequency limit caused by TP
LC05	Frequency limit caused by voltage
LC03	Frequency limit caused by current
LC06	Frequency limit caused by PFC
LC30	Frequency limit caused by high pressure
LC31	Frequency limit caused by low pressure
LH07	Frequency limit caused by remote controller
--	Indoor units mode conflict(match with multi outdoor unit)

4. Error Diagnosis and Troubleshooting Without Error Code

WARNING

Be sure to turn off unit before any maintenance to prevent damage or injury.

4.1 Remote maintenance

SUGGESTION: When troubles occur, please check the following points with customers before field maintenance.

No.	Problem	Solution
1	Unit will not start	TS15 - TS16
2	The power switch is on but fans will not start	TS15 - TS16
3	The temperature on the display board cannot be set	TS15 - TS16
4	Unit is on but the wind is not cold(hot)	TS15 - TS16
5	Unit runs, but shortly stops	TS15 - TS16
6	The unit starts up and stops frequently	TS15 - TS16
7	Unit runs continuously but insufficient cooling(heating)	TS15 - TS16
8	Cool can not change to heat	TS15 - TS16
9	Unit is noisy	TS15 - TS16

4.2 Field maintenance

	Problem	Solution
1	Unit will not start	TS17 - TS18
2	Compressor will not start but fans run	TS17 - TS18
3	Compressor and condenser (outdoor) fan will not start	TS17 - TS18
4	Evaporator (indoor) fan will not start	TS17 - TS18
5	Condenser (Outdoor) fan will not start	TS17 - TS18
6	Unit runs, but shortly stops	TS17 - TS18
7	Compressor short-cycles due to overload	TS17 - TS18
8	High discharge pressure	TS17 - TS18
9	Low discharge pressure	TS17 - TS18
10	High suction pressure	TS17 - TS18
11	Low suction pressure	TS17 - TS18
12	Unit runs continuously but insufficient cooling	TS17 - TS18
13	Too cool	TS17 - TS18
14	Compressor is noisy	TS17 - TS18
15	Horizontal louver can not revolve	TS17 - TS18

1.Remote Maintenance	Electrical Circuit							Refrigerant Circuit							
Possible causes of trouble	Power failure	The main power tripped	Loose connections	Faulty transformer	The voltage is too high or too low	The remote control is powered off	Broken remote control	Dirty air filter	Dirty condenser fins	The setting temperature is higher/lower than the room's(cooling/heating)	The ambient temperature is too high/low when the mode is cooling/heating	Fan mode	SILENCE function is activated(optional function)	Frosting and defrosting frequently	
Unit will not start	☆	☆	☆	☆											
The power switch is on but fans will not start			☆	☆	☆										
The temperature on the display board cannot be set						☆	☆								
Unit is on but the wind is not cold(hot)										☆	☆	☆			
Unit runs, but shortly stops					☆					☆	☆				
The unit starts up and stops frequently					☆						☆			☆	
Unit runs continuously but insufficient cooling(heating)								☆	☆	☆	☆		☆		
Cool can not change to heat															
Unit is noisy															
Test method / remedy	Test voltage	Close the power switch	Inspect connections - tighten	Change the transformer	Test voltage	Replace the battery of the remote control	Replace the remote control	Clean or replace	Clean	Adjust the setting temperature	Turn the AC later	Adjust to cool mode	Turn off SILENCE function.	Turn the AC later	

1.Remote Maintenance	Others						
Possible causes of trouble	Heavy load condition	Loosen hold down bolts and / or screws	Bad airproof	The air inlet or outlet of either unit is blocked	Interference from cell phone towers and remote boosters	Shipping plates remain attached	
Unit will not start							
The power switch is on but fans will not start					☆		
The temperature on the display board cannot be set							
Unit is on but the wind is not cold(hot)							
Unit runs, but shortly stops							
The unit starts up and stops frequently				☆			
Unit runs continuously but insufficient cooling(heating)	☆		☆	☆			
Cool can not change to heat							
Unit is noisy		☆				☆	
Test method / remedy	Check heat load	Tighten bolts or screws	Close all the windows and doors	Remove the obstacles	Reconnect the power or press **ON/OFF** button on remote control to restart operation	Remove them	

2.Field Maintenance	Refrigerant Circuit																			Others				
Possible causes of trouble	Compressor stuck	Shortage of refrigerant	Restricted liquid line	Dirty air filter	Dirty evaporator coil	Insufficient air through evaporator coil	Overcharge of refrigerant	Dirty or partially blocked condenser	Air or incompressible gas in refrigerant cycle	Short cycling of condensing air	High temperature condensing medium	Insufficient condensing medium	Broken compressor internal parts	Inefficient compressor	Expansion valve obstructed	Expansion valve or capillary tube closed completely	Leaking power element on expansion valve	Poor installation of feeler bulb	Heavy load condition	Loosen hold down bolts and / or screws	Shipping plates remain attached	Poor choices of capacity	Contact of piping with other piping or external plate
Unit will not start																							
Compressor will not start but fans run	☆																						
Compressor and condenser (outdoor) fan will not start																							
Evaporator (indoor) fan will not start																							
Condenser (Outdoor) fan will not start																							
Unit runs, but shortly stops		☆	☆				☆	☆								☆	☆						
Compressor short-cycles due to overload		☆					☆	☆															
High discharge pressure							☆	☆	☆	☆	☆	☆											
Low discharge pressure		☆												☆									
High suction pressure							☆							☆				☆	☆				
Low suction pressure		☆	☆	☆	☆	☆									☆	☆	☆						
Unit runs continuously but insufficient cooling		☆	☆	☆	☆	☆		☆	☆	☆				☆					☆			☆	
Too cool																							
Compressor is noisy							☆						☆							☆	☆		☆
Horizontal louver can not revolve																							
Test method / remedy	Replace the compressor	Leak test	Replace restricted part	Clean or replace	Clean coil	Check fan	Change charged refrigerant volume	Clean condenser or remove obstacle	Purge, evacuate and recharge	Remove obstruction to air flow	Remove obstruction in air or water flow	Remove obstruction in air or water flow	Replace compressor	Test compressor efficiency	Replace valve	Replace valve	Replace valve	Fix feeler bulb	Check heat load	Tighten bolts or screws	Remove them	Choose AC of lager capacity or add the number of AC	Rectify piping so as not to contact each other or with external plate

2.Field Maintenance	Electrical Circuit														
Possible causes of trouble	Power failure	Blown fuse or varistor	Loose connections	Shorted or broken wires	Safety device opens	Faulty thermostat / room temperature sensor	Wrong setting place of temperature sensor	Faulty transformer	Shorted or open capacitor	Faulty magnetic contactor for compressor	Faulty magnetic contactor for fan	Low voltage	Faulty stepping motor	Shorted or grounded compressor	Shorted or grounded fan motor
Unit will not start	☆	☆	☆	☆	☆			☆							
Compressor will not start but fans run				☆		☆			☆	☆				☆	
Compressor and condenser (outdoor) fan will not start				☆		☆				☆					
Evaporator (indoor) fan will not start				☆					☆		☆				☆
Condenser (Outdoor) fan will not start				☆		☆			☆		☆				☆
Unit runs, but shortly stops										☆		☆			
Compressor short-cycles due to overload										☆		☆			
High discharge pressure															
Low discharge pressure															
High suction pressure															
Low suction pressure															
Unit runs continuously but insufficient cooling															
Too cool						☆	☆								
Compressor is noisy															
Horizontal louver can not revolve			☆	☆									☆		
Test method / remedy	Test voltage	Inspect fuse type & size	Inspect connections - tighten	Test circuits with tester	Test continuity of safety device	Test continuity of thermostat / sensor & wiring	Place the temperature sensor at the central of the air inlet grille	Check control circuit with tester	Check capacitor with tester	Test continuity of coil & contacts	Test continuity of coil & contacts	Test voltage	Replace the stepping motor	Check resistance with multimeter	Check resistance with multimeter

5. Quick Maintenance by Error Code

If you do not have the time to test which specific parts are faulty, you can directly change the required parts according the error code.

You can find the parts to replace by error code in the following table.

Part requiring replacement	Error Code							
	EH00/EH0R	EL01	EH03	EH60	EH61	EL0C	EH0E	EC53
Indoor PCB	✓	✓	✓	✓	✓	✓	✓	x
Outdoor PCB	x	✓	x	x	x	x	x	✓
Indoor fan motor	x	x	✓	x	x	x	x	x
T1 sensor	x	x	x	✓	x	x	x	x
T2 Sensor	x	x	x	x	✓	✓	✓	x
T3 Sensor	x	x	x	x	x	x	x	x
T4 Sensor	x	x	x	x	x	x	x	✓
Reactor	x	✓	x	x	x	x	x	x
Compressor	x	x	x	x	x	x	x	x
Additional refrigerant	x	x	x	x	x	✓	✓	x
Water-level switch	x	x	x	x	x	x	✓	x
Water pump	x	x	x	x	x	x	✓	x

Part requiring replacement	EC54	EC51	EC52	EC07	PC00	PC01	PC02	PC04	PC03
Indoor PCB	x	x	x	x	x	x	x	x	x
Outdoor PCB	✓	✓	✓	✓	✓	✓	✓	✓	✓
Outdoor fan motor	x	x	x	✓	✓	x	✓	✓	x
T3 Sensor	x	x	✓	x	x	x	x	x	x
TP Sensor	✓	x	x	x	x	x	x	x	x
Reactor	x	x	x	x	x	✓	x	x	x
Compressor	x	x	x	x	✓	x	x	✓	x
IPM module board	x	x	x	x	✓	✓	✓	✓	x
Low pressure protector	x	x	x	x	x	x	x	x	✓
Additional refrigerant	x	x	x	x	x	x	x	x	✓

Note: For certain models, outdoor PCB could not be removed separately. In this case, the outdoor electric control box should be replaced as a whole.

6. Troubleshooting by Error Code

6.1 EH 00/ EH 0A / EC 51 (EEPROM Parameter Error Diagnosis and Solution)

Description: Indoor or outdoor PCB main chip does not receive feedback from EEPROM chip.

Recommended parts to prepare:

- Indoor PCB
- Outdoor PCB

Troubleshooting and repair:

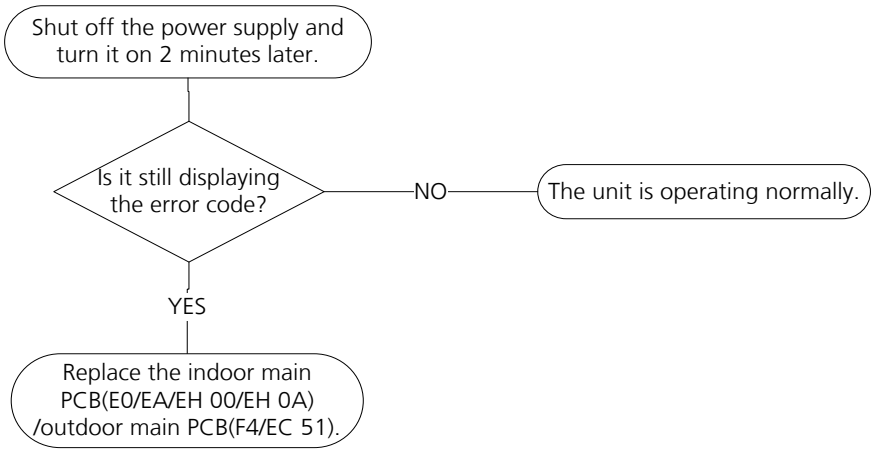

Remarks:
EEPROM: A read-only memory whose contents can be erased and reprogrammed using a pulsed voltage.

The location of the EEPROM chip on the indoor and outdoor PCB is shown in the following two images:

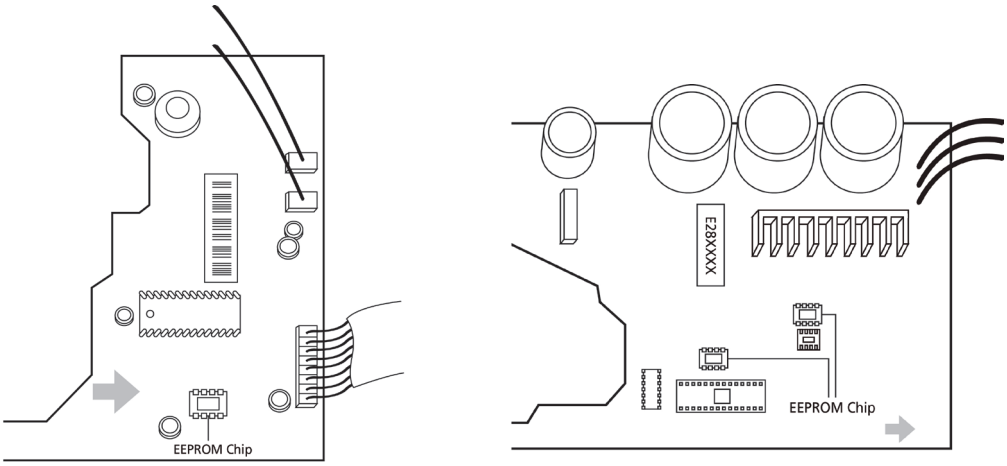

Note: For certain models, outdoor PCB could not be removed separately. In this case, the outdoor electric control box should be replaced as a whole. This pictures are only for reference, actual appearance may vary.

Troubleshooting and repair of compressor driven chip EEPROM parameter error and communication error between outdoor main chip and compressor driven chip are same as EC 51.

6.2 EL 01 (Indoor and Outdoor Unit Communication Error Diagnosis and Solution)

Description: Indoor unit can not communicate with outdoor unit

Recommended parts to prepare:

- Indoor PCB
- Outdoor PCB
- Reactor

Troubleshooting and repair:

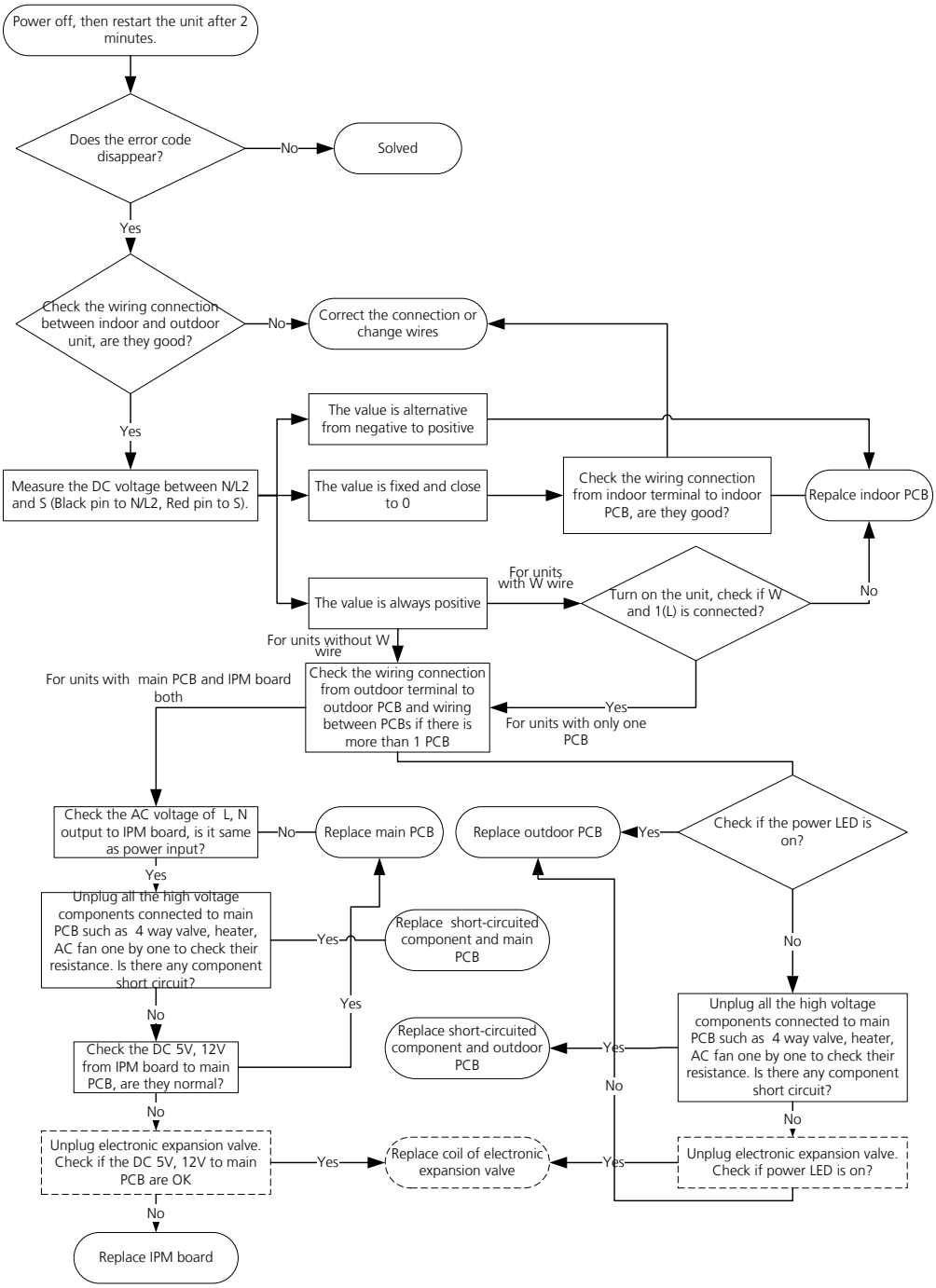

Note: For certain models, outdoor PCB could not be removed separately. In this case, the outdoor electric

control box should be replaced as a whole.

Remarks:

- Use a multimeter to test the DC voltage between 2 port(or S or L2 port) and 3 port(or N or S port) of outdoor unit. The red pin of multimeter connects with 2 port(or S or L2 port) while the black pin is for 3 port(or N or S port) .
- When AC is operating normally, the voltage is moving alternately as positive values and negative values
- If the outdoor unit has malfunction, the voltage has always been the positive value.
- While if the indoor unit has malfunction, the voltage has always been a certain value.

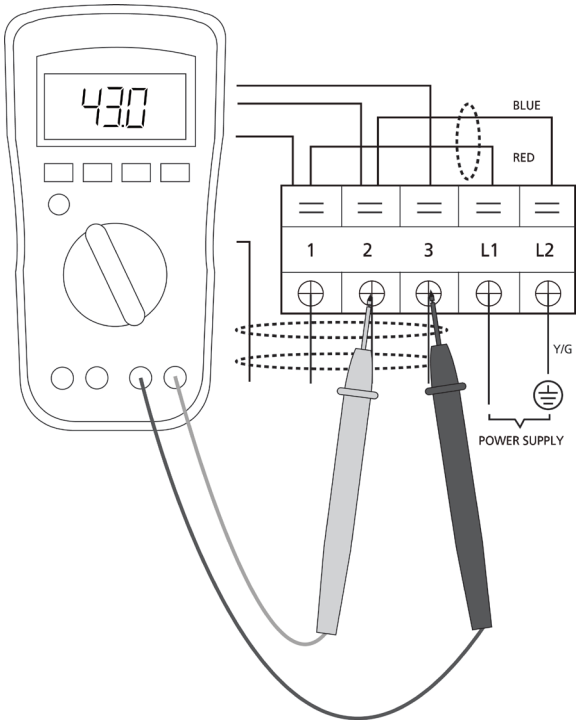

- Use a multimeter to test the resistance of the reactor which does not connect with capacitor.
- The normal value should be around zero ohm. Otherwise, the reactor must have malfunction.

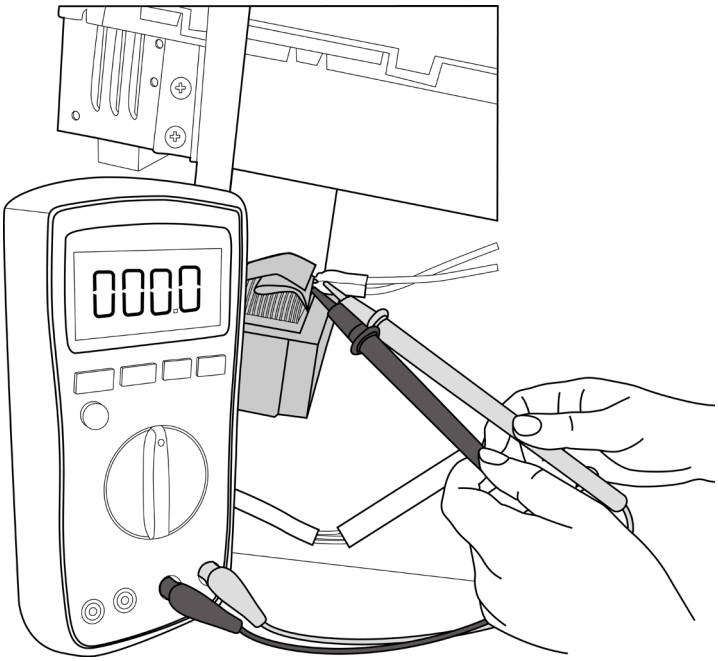

Note: The picture and the value are only for reference, actual condition and specific value may vary.

6.3 EH 03 / EC 07 (Fan Speed Is Operating Outside of Normal Range)/EC 71(Over Current Failure of Outdoor DC Fan Motor) Diagnosis and Solution

Description: When indoor / outdoor fan speed keeps too low or too high for a certain time, the unit ceases operation and the LED displays the failure.

Recommended parts to prepare:

- Connection wires
- Fan assembly
- Fan motor
- PCB

Troubleshooting and repair:

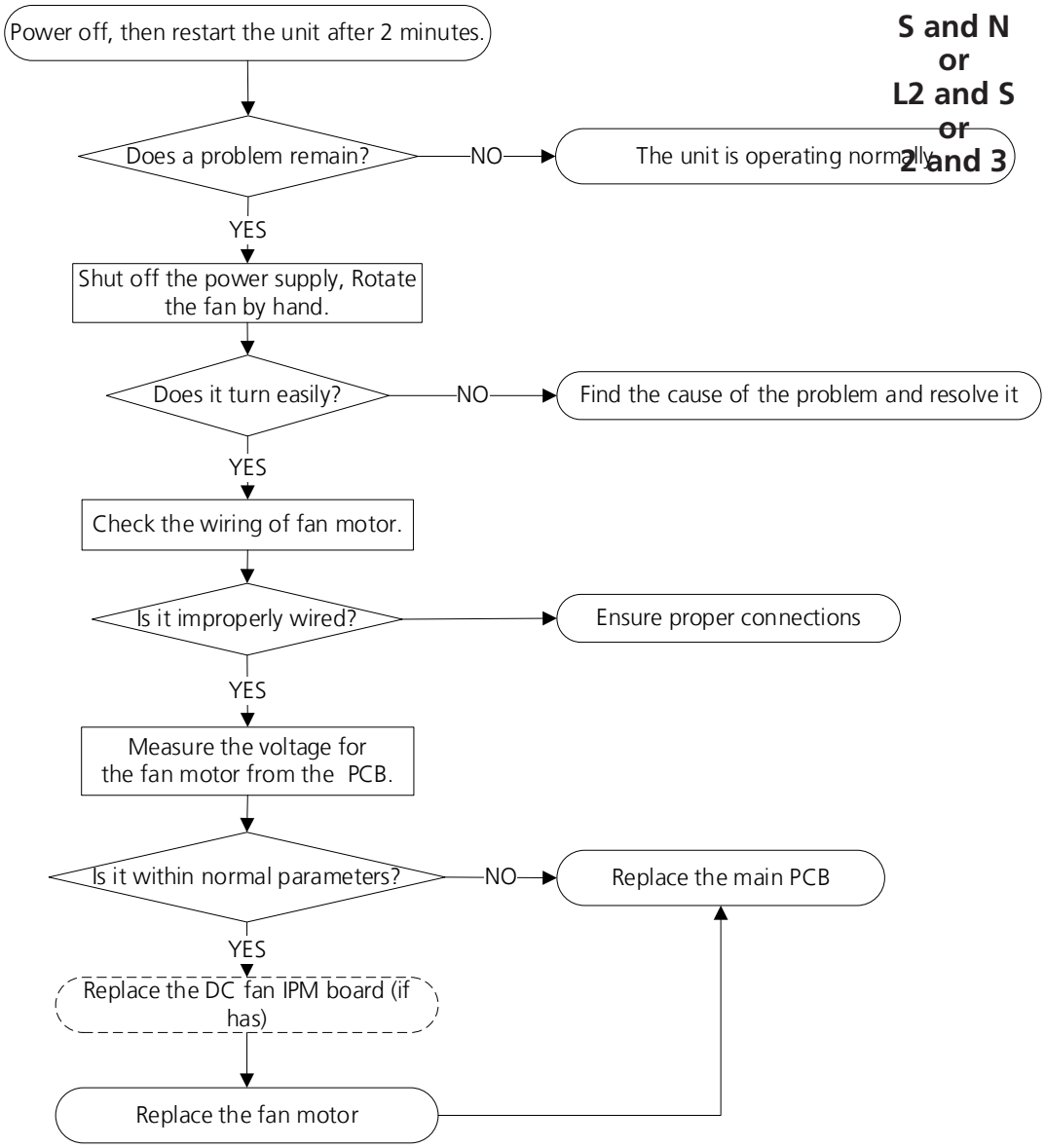

Note: For certain models, outdoor PCB could not be removed separately. In this case, the outdoor electric control box should be replaced as a whole.

Index:

1. Indoor or Outdoor DC Fan Motor(control chip is in fan motor)

Power on and when the unit is in standby, measure the voltage of pin1-pin3, pin4-pin3 in fan motor connector. If the value of the voltage is not in the range showing in below table, the PCB must has problems and need to be replaced.

No.	Color	Signal	Voltage
1	Red	Vs/Vm	192V~380V
2	---	---	---
3	Black	GND	0V
4	White	Vcc	13.5-16.5V
5	Yellow	Vsp	0~6.5V
6	Blue	FG	13.5-16.5V

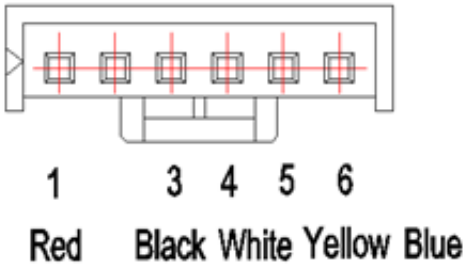

2.Indoor DC Fan IPM Board (Duct and Ceiling-floor Unit)

Power on and when the unit is in standby, measure the voltage of CON1, pin1-pin2 and pin3-pin2 of CN1 in DC motor driver board. If the value of the voltage is not in the range showing in below tables, the indoor main PCB must has problems and need to be replaced.

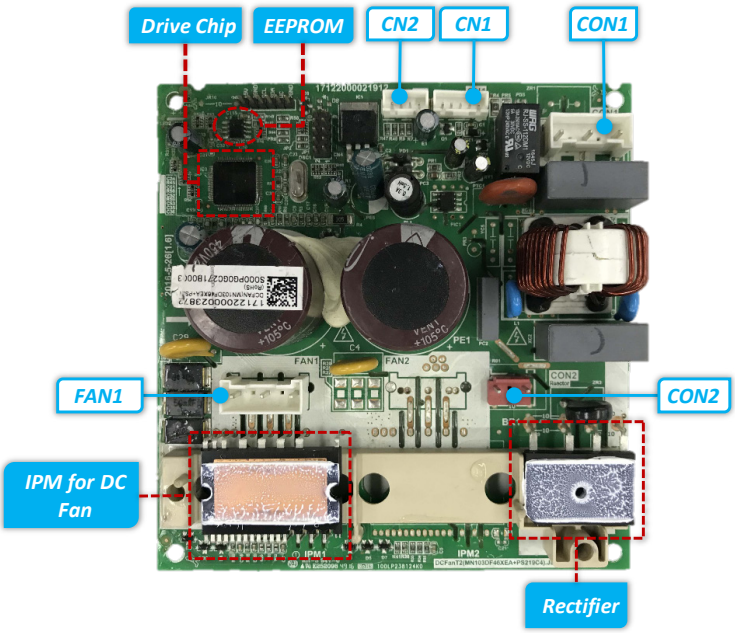

Port	Description	Parameter	Remark
CON1	Power input for the PCB	230V/AC	
CN1	Communication with main PCB	DC	
CN2	Test port	5V/DC	For debugging board
CN23	UVW output for DC fan motor		
CON2	Ports for reactor		

CN1 Communication with main PCB

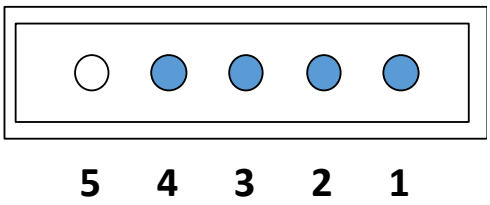

NO.	Signal	Voltage
1	Vcc	+15V
2	GND	
3	TXD	0~6V
4	RXD	0~15V
5	--	--

3. Outdoor DC Fan Motor (control chip is in outdoor PCB)

Release the UVW connector. Measure the resistance of U-V, U-W, V-W. If the resistance is not equal to each other, the fan motor must has problems and need to be replaced. otherwise the PCB must has problems and need to be replaced.

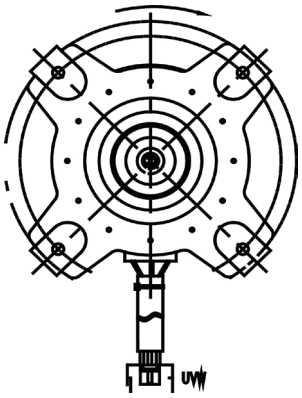

4. Outdoor DC Fan IPM Board(for some double fan models)

Power on and when the unit is in standby, measure the voltage of CON1, pin1-pin2 and pin3-pin2 of CN1 in DC motor driver board. If the value of the voltage is not in the range showing in below tables, the outdoor main PCB must has problems and need to be replaced.

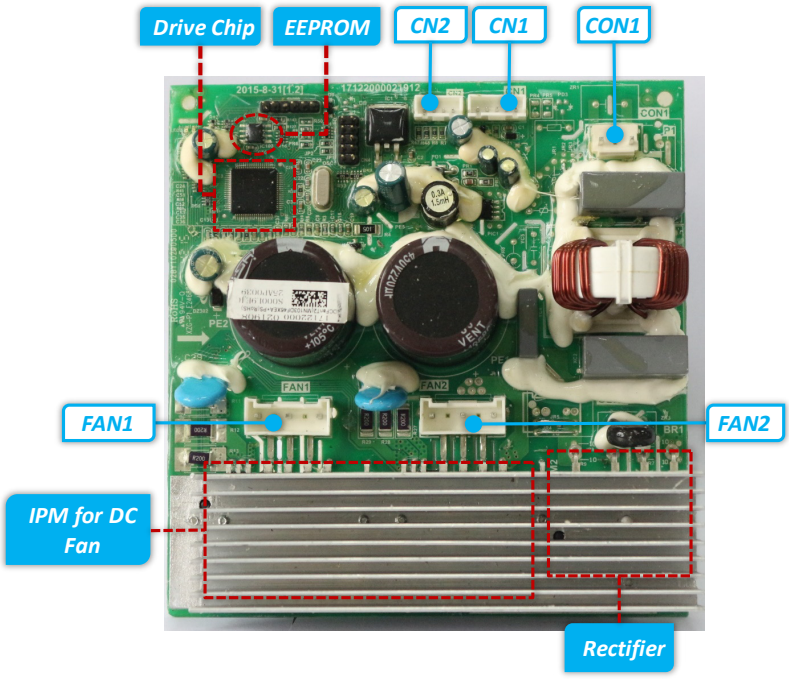

Part	Description	Parameter	Remark
CON1	Power input for the PCB	192-380V/DC	
CN1	Communication with main PCB	DC	
CN2	Test port	5V/DC	For debugging board
FAN1	UVW output for DC fan motor		
FAN2	UVW output for DC fan motor		

CN1 Communication with main PCB

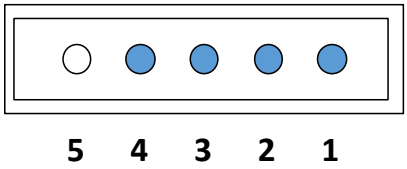

No.	Signal	Voltage
1	Vcc	13.5-16.5V
2	GND	0V
3	Vsp	0~6.5V
4	FG	13.5-16.5V
5	---	---

6.4 EH 60/EH 61/EC 53/EC 52/EC 54/EC 56/EC 50 (Open Circuit or Short Circuit of Temperature Sensor Diagnosis and Solution)

Description: If the sampling voltage is lower than 0.06V or higher than 4.94V, the LED displays the failure.

Recommended parts to prepare:

- Connection wires
- Sensors
- PCB

Troubleshooting and repair:

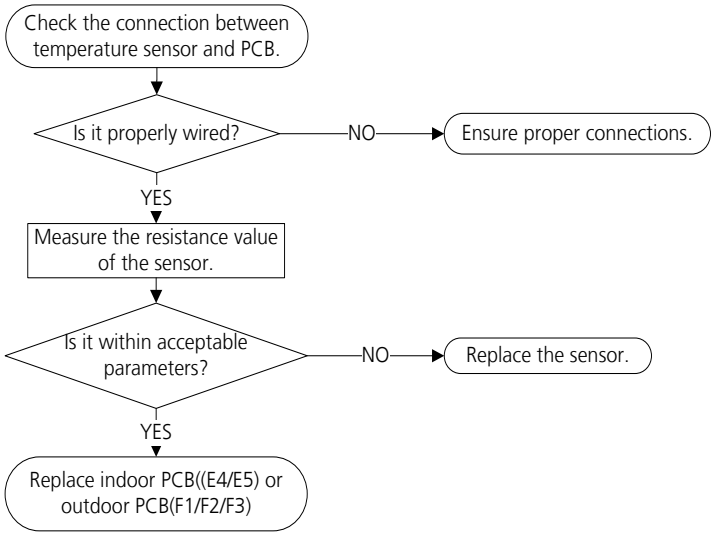

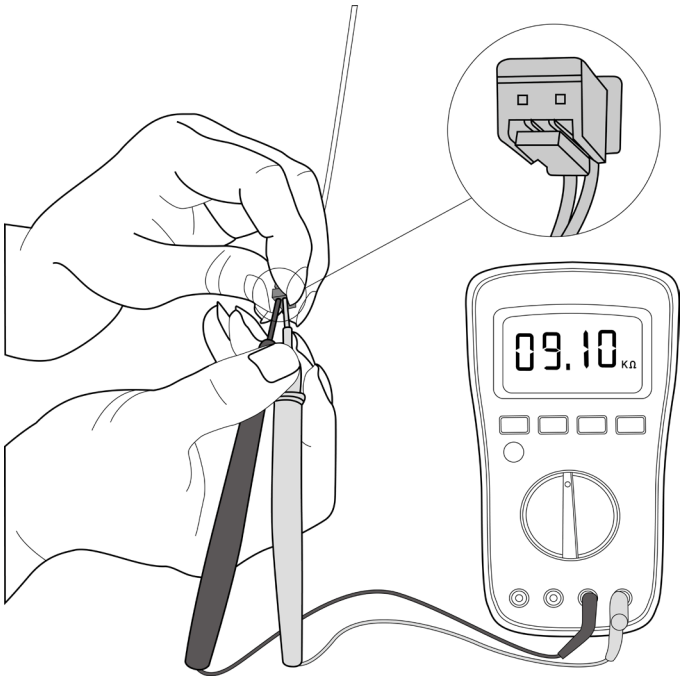

Note: For certain models, outdoor PCB could not be removed separately. In this case, the outdoor electric control box should be replaced as a whole. This picture and the value are only for reference, actual appearance and value may vary

6.5 EL 0C (Refrigerant Leakage Detection Diagnosis and Solution)

Description: Define the evaporator coil temperature T2 of the compressor just starts running as Tcool.

In the beginning 5 minutes after the compressor starts up, if T2 < Tcool-1°C(1.8°F) does not keep continuous 4 seconds and compressor running frequency higher than 50Hz does not keep for 3 minutes, and this situation happens 3 times, the display area will show "EL 0C" and AC will turn off.

Recommended parts to prepare:

- T2 sensor
- Indoor PCB
- Additional refrigerant

Troubleshooting and repair:

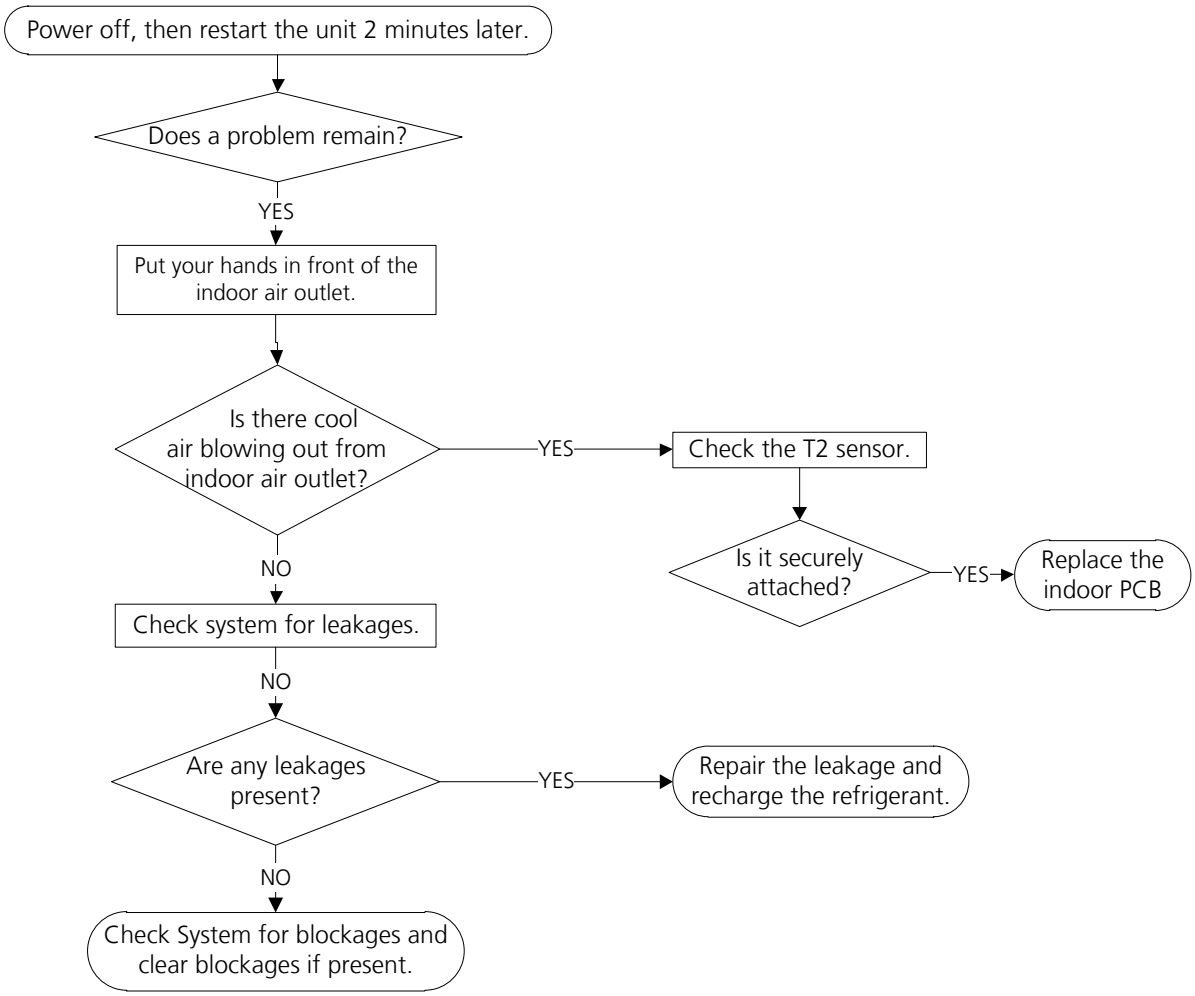

6.6 EH 0E(Water-Level Alarm Malfunction Diagnosis and Solution)

Description: If the sampling voltage is not 5V, the LED displays the failure code.

Recommended parts to prepare:

- Connection wires
- Water-level switch
- Water pump
- Indoor PCB

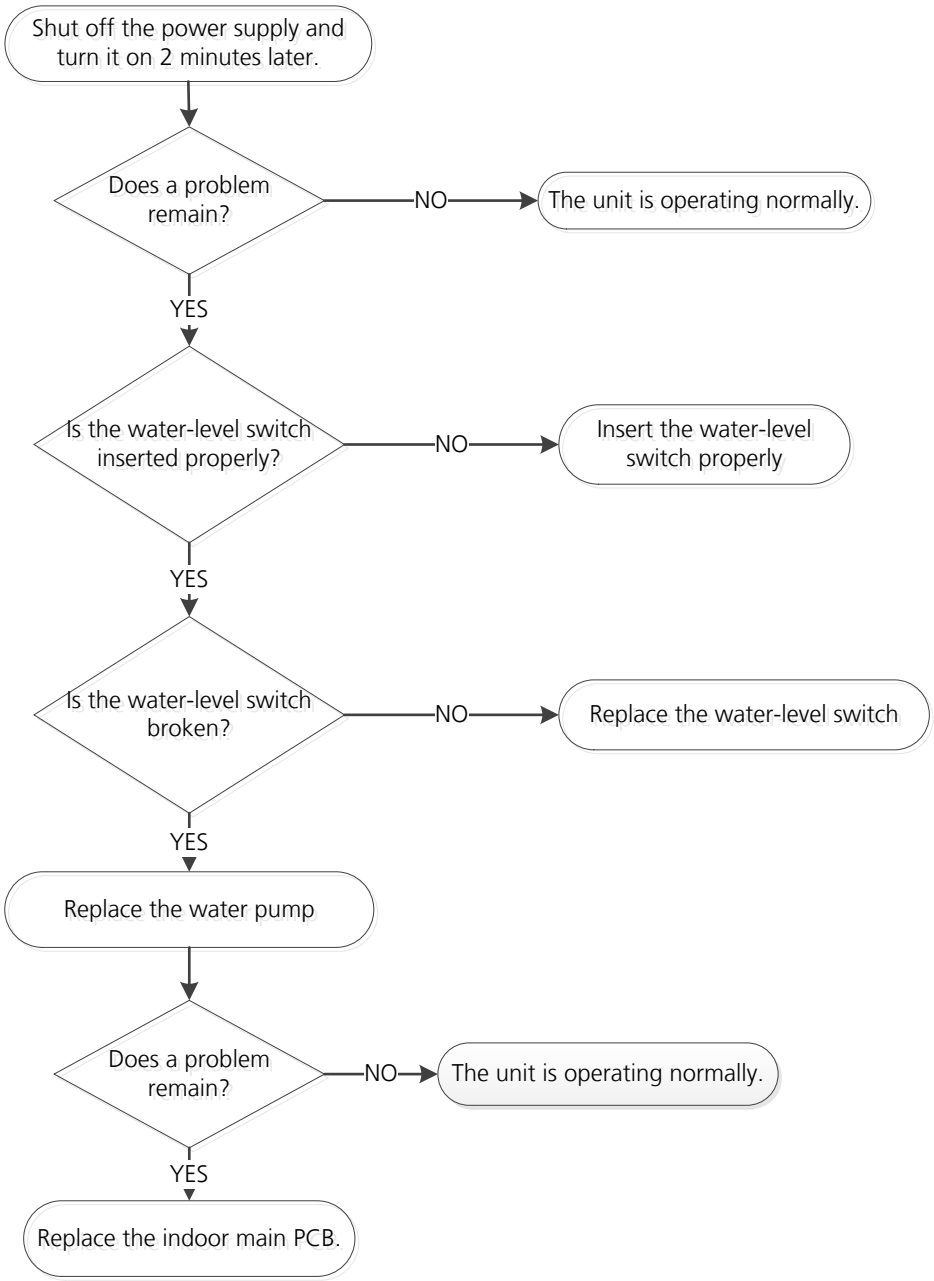

6.7 PC 00(IPM malfunction or IGBT over-strong current protection Diagnosis and Solution)

Description: When the voltage signal the IPM sends to the compressor drive chip is abnormal, the display LED shows "PC 00" and the AC turn off.

Recommended parts to prepare:

- Connection wires
- IPM module board
- Outdoor fan assembly
- Compressor
- Outdoor PCB

Troubleshooting and repair:

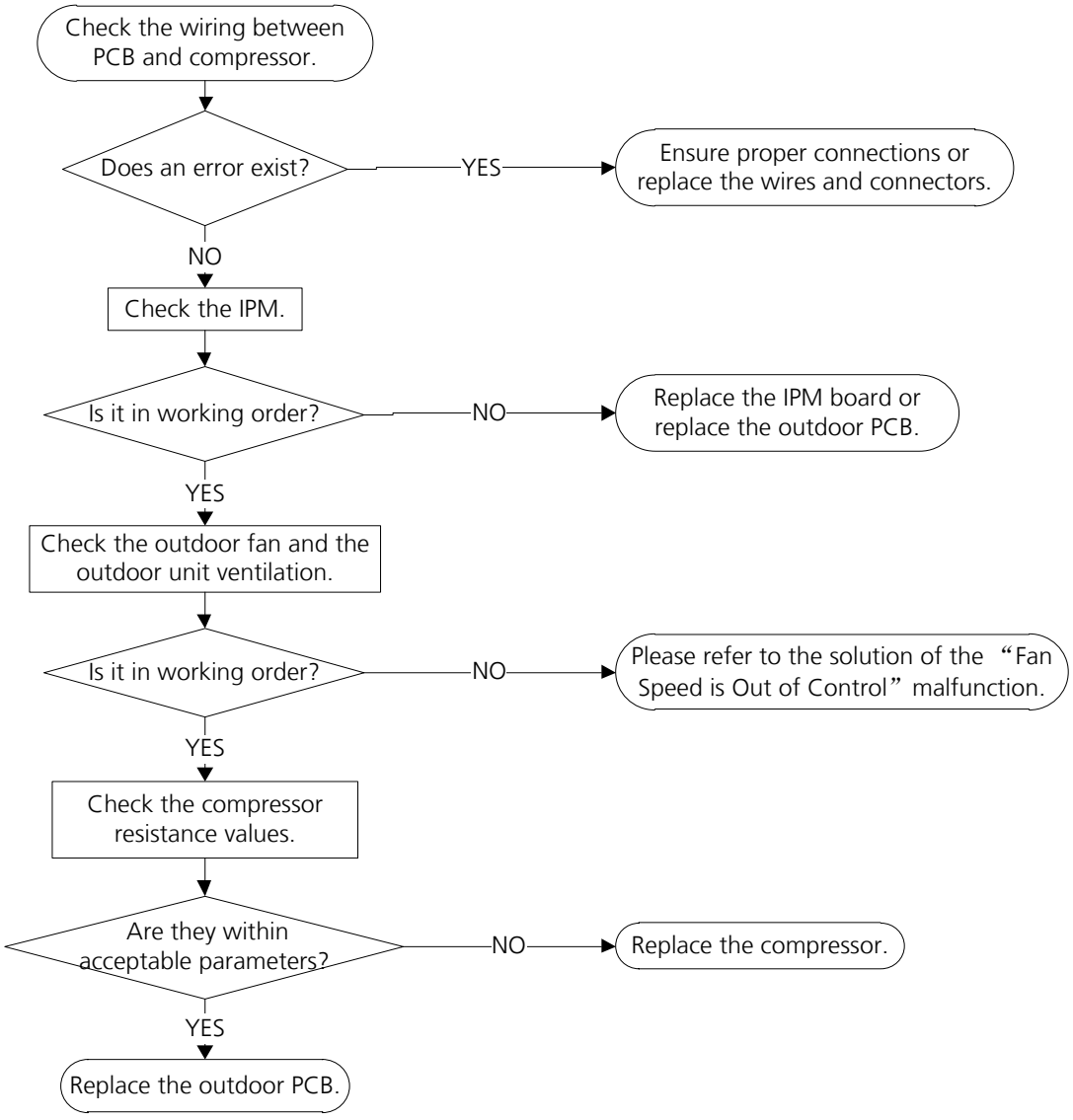

Note: For certain models, outdoor PCB could not be removed separately. In this case, the outdoor electric control box should be replaced as a whole.

6.8 PC 01(Over voltage or too low voltage protection)/PC 10(Outdoor unit low AC voltage protection)/PC 11(Outdoor unit main control board DC bus high voltage protection)/PC 12(Outdoor unit main control board DC bus high voltage protection /341 MCE error) Diagnosis and Solution

Description: Abnormal increases or decreases in voltage are detected by checking the specified voltage detection circuit.

Recommended parts to prepare:

- Power supply wires
- IPM module board
- PCB
- Reactor

Troubleshooting and repair:

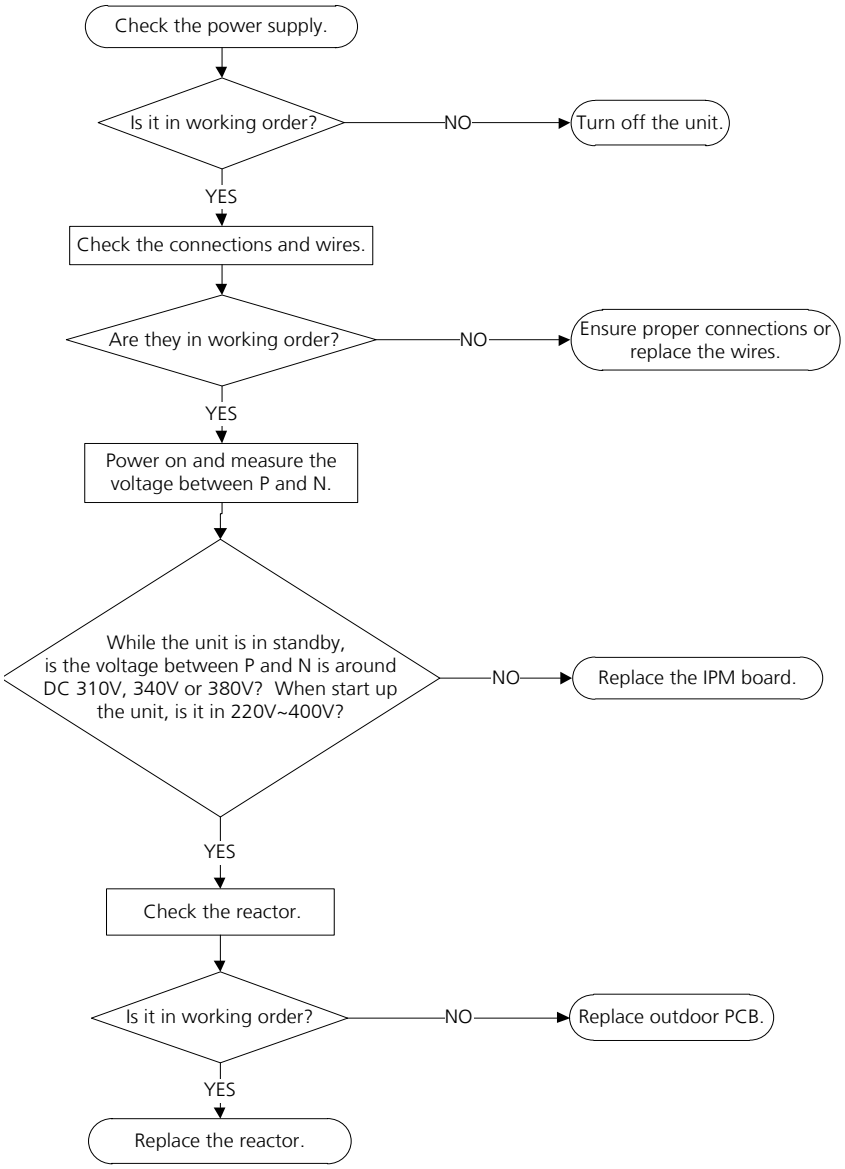

Note: For certain models, outdoor PCB could not be removed separately. In this case, the outdoor electric control box should be replaced as a whole.

6.9 PC 04(Inverter compressor drive error Diagnosis and Solution)

Description: An abnormal inverter compressor drive is detected by a special detection circuit, including communication signal detection, voltage detection, compressor rotation speed signal detection and so on.

Recommended parts to prepare:

- Connection wires
- IPM module board
- Outdoor fan assembly
- Compressor
- Outdoor PCB

Troubleshooting and repair:

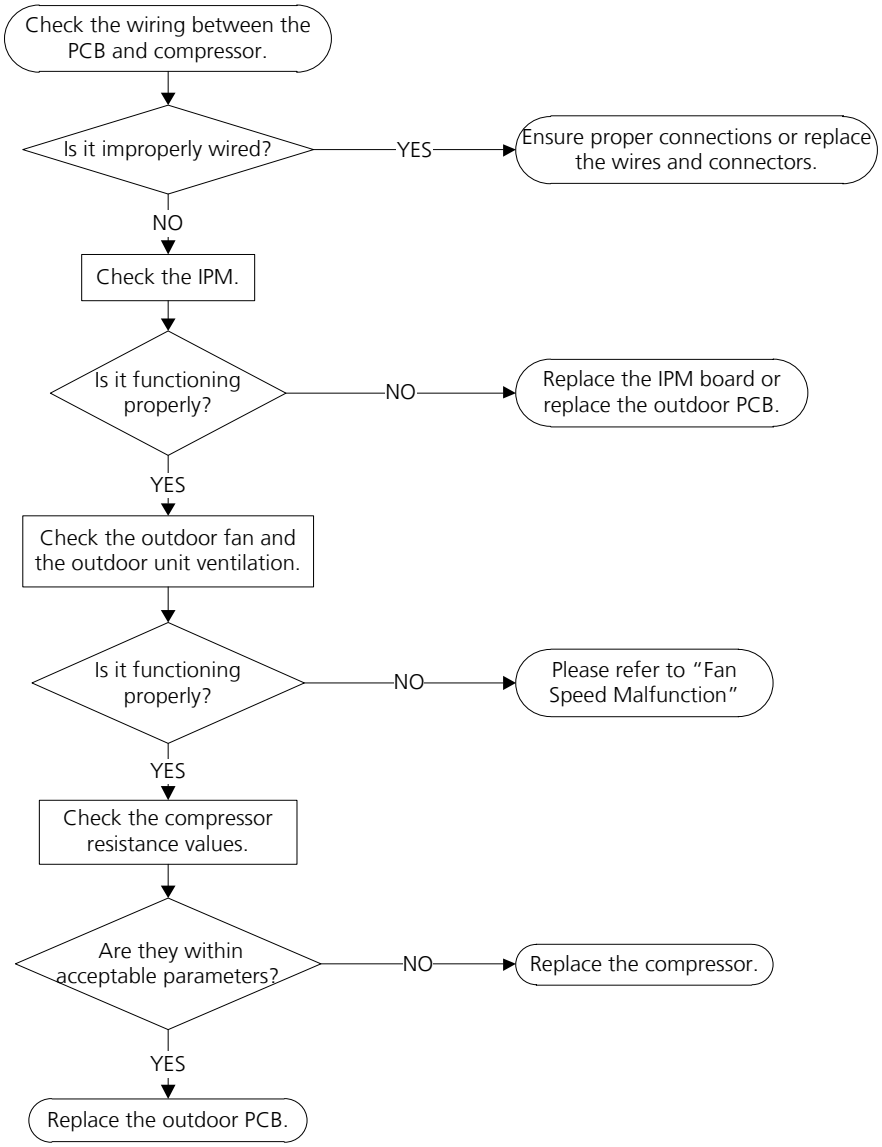

Note: For certain models, outdoor PCB could not be removed separately. In this case, the outdoor electric control box should be replaced as a whole.

6.10 PC 03/PC 31(Low Pressure Protection Diagnosis and Solution)

Description: If the sampling voltage is not 5V, the LED displays a failure code.

Recommended parts to prepare:

- Connection wires
- Low pressure protector
- Indoor fan assembly
- Outdoor PCB

Troubleshooting and repair:

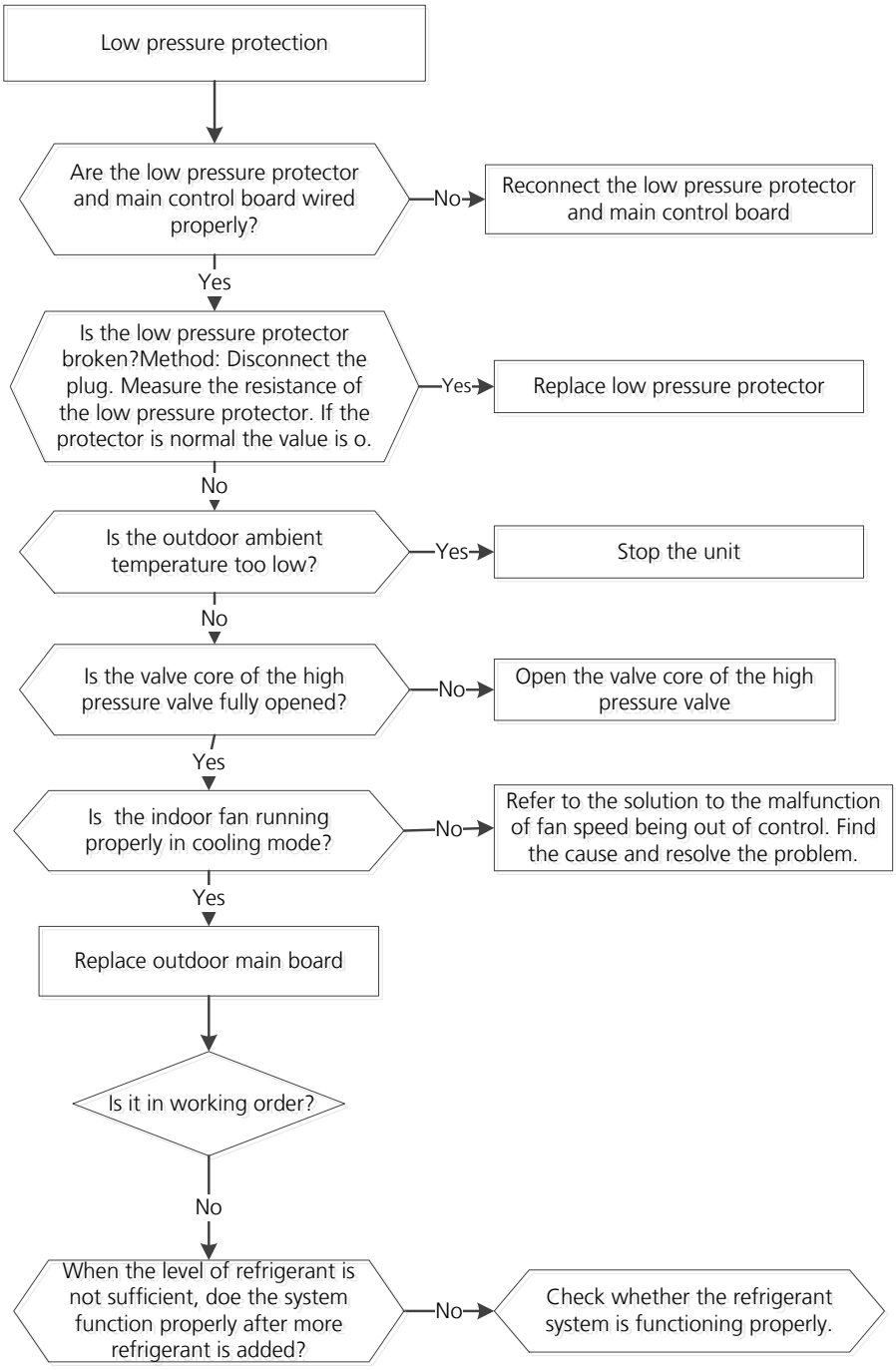

Note: For certain models, outdoor PCB could not be removed separately. In this case, the outdoor electric control box should be replaced as a whole.

6.11 PC 02(Top temperature protection of compressor or High temperature protection of IPM module diagnosis and solution)

Description: For some models with overload protection, If the sampling voltage is not 5V, the LED will display the failure.

If the temperature of IPM module is higher than a certain value, the LED displays the failure code.

Recommended parts to prepare:

- Connection wires
- Outdoor PCB
- IPM module board
- High pressure protector
- System blockages

Troubleshooting and repair:

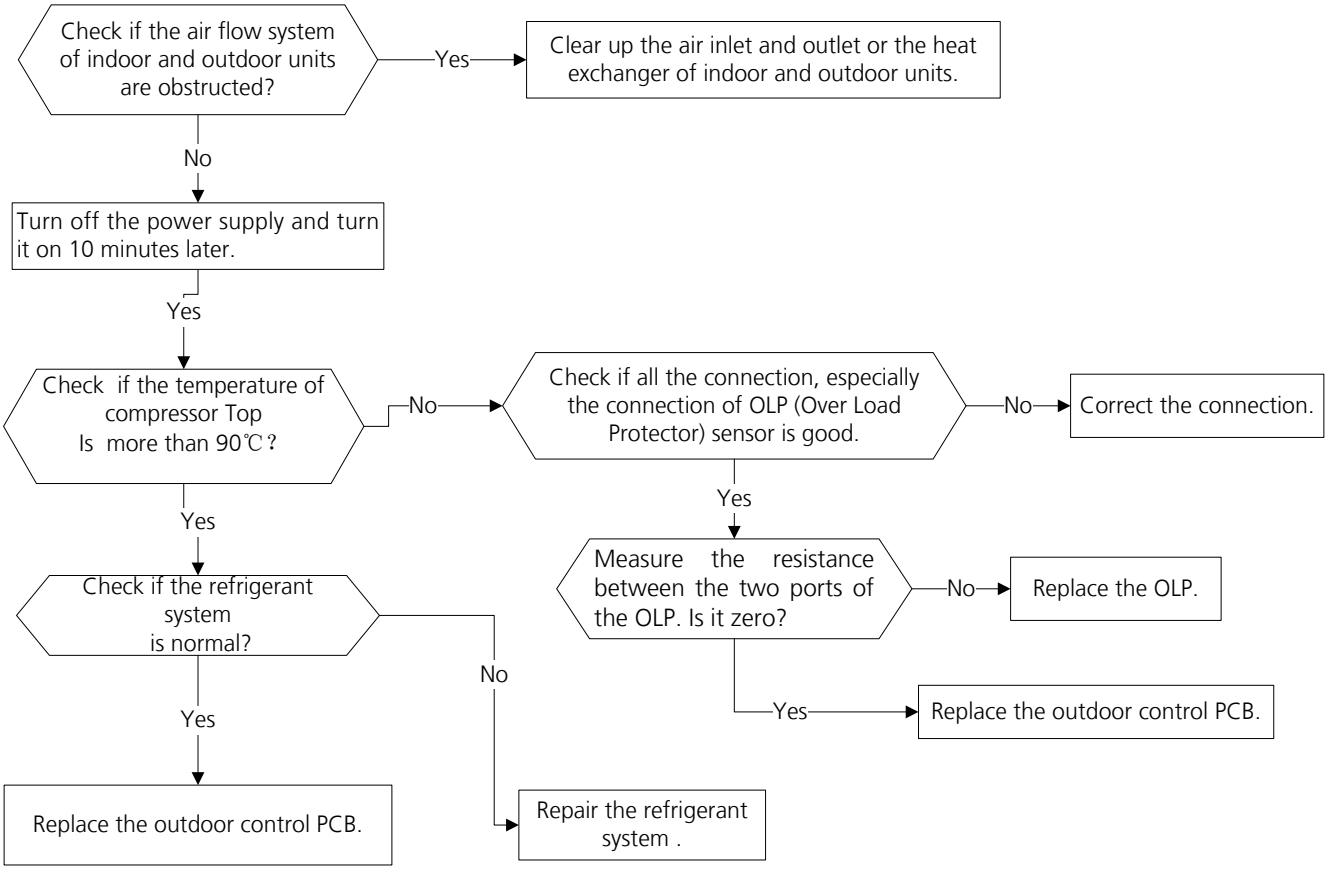

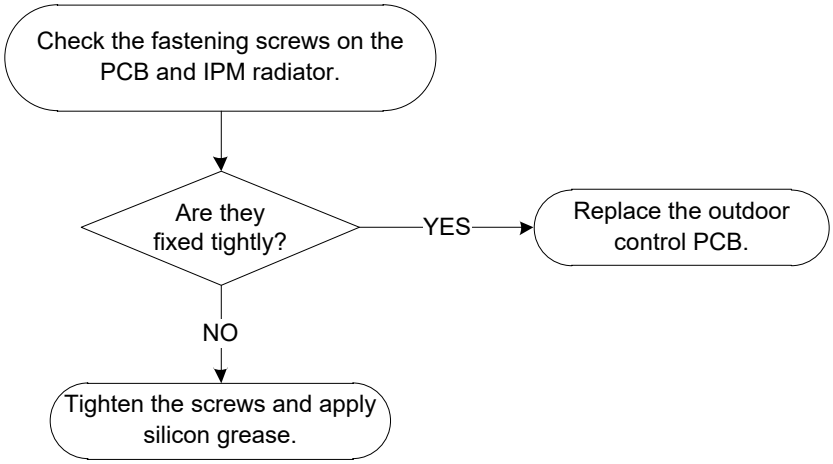

6.12 EC 0d(Outdoor unit malfunction Diagnosis and Solution)

Description: The indoor unit detect the outdoor unit is error.

Recommended parts to prepare:

- Outdoor unit

Troubleshooting and repair:

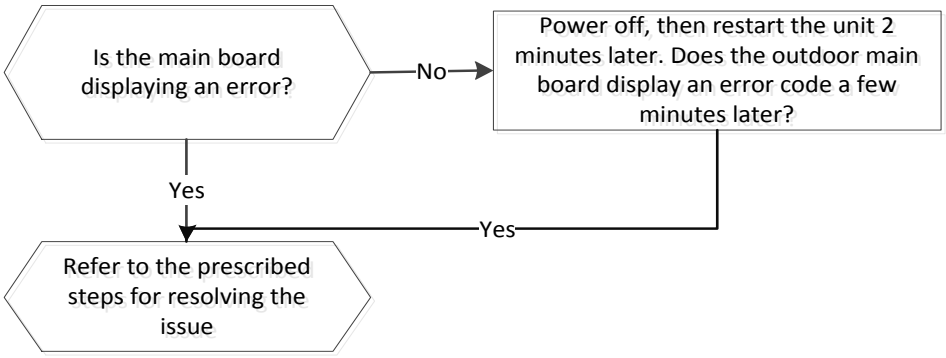

6.13 PC 40(Communication error between outdoor main PCB and IPM board diagnosis and solution)

Description: The main PCB cannot detect the IPM board.

Recommended parts to prepare:

- Connection wires
- IPM board
- Outdoor main PCB
- Electric control box

Troubleshooting and repair:

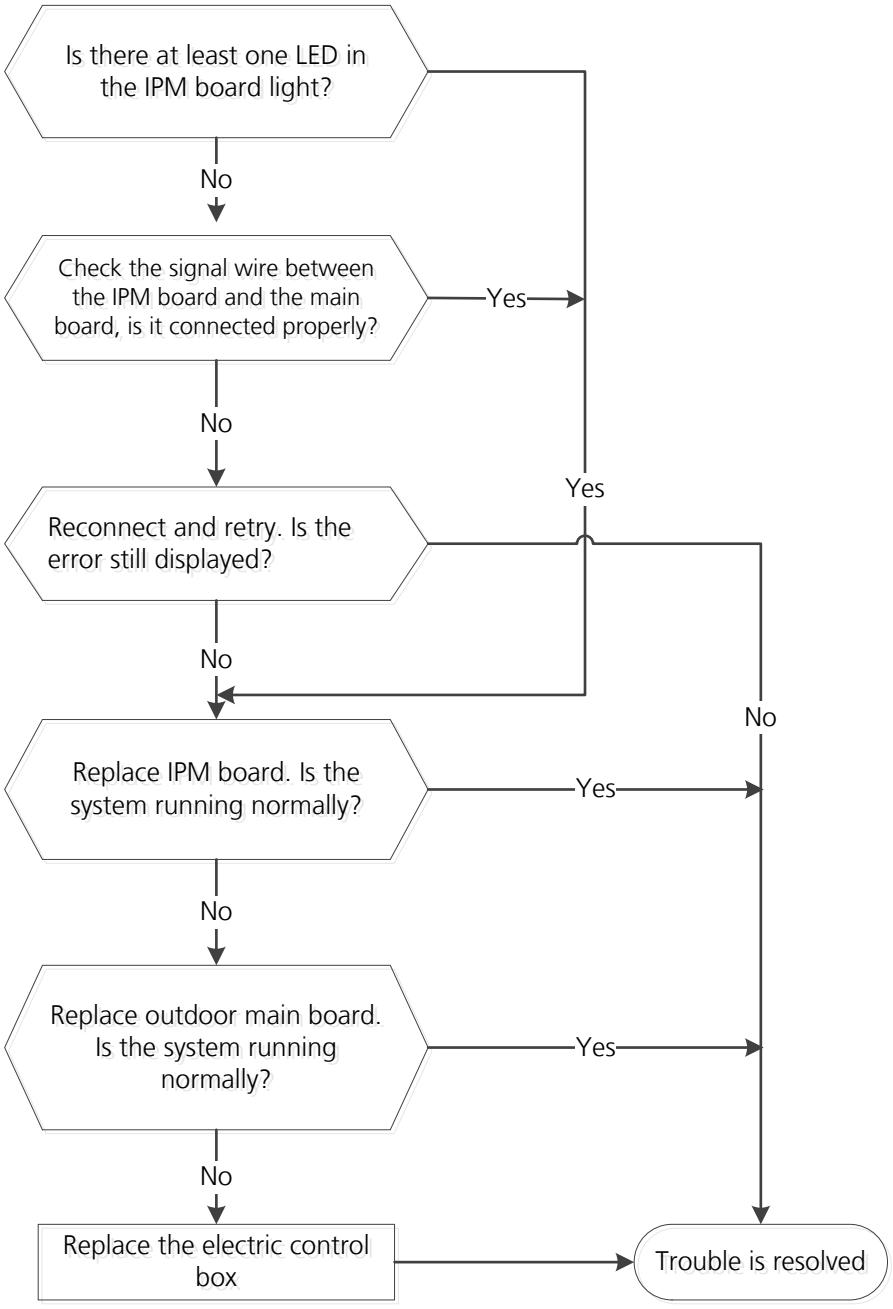

6.14 PC 08(Current overload protection)/PC 44(Outdoor unit zero speed protection)/ PC 46(Compressor speed has been out of control)/PC 49(Compressor overcurrent failure) diagnosis and solution

Description: An abnormal current rise is detected by checking the specified current detection circuit.

Recommended parts to prepare:

- Connection wires
- Rectifier
- PFC circuit or reactor
- Blocked refrigeration piping system
- Pressure switch
- Outdoor fan
- IPM module board
- Outdoor PCB

Troubleshooting and repair:

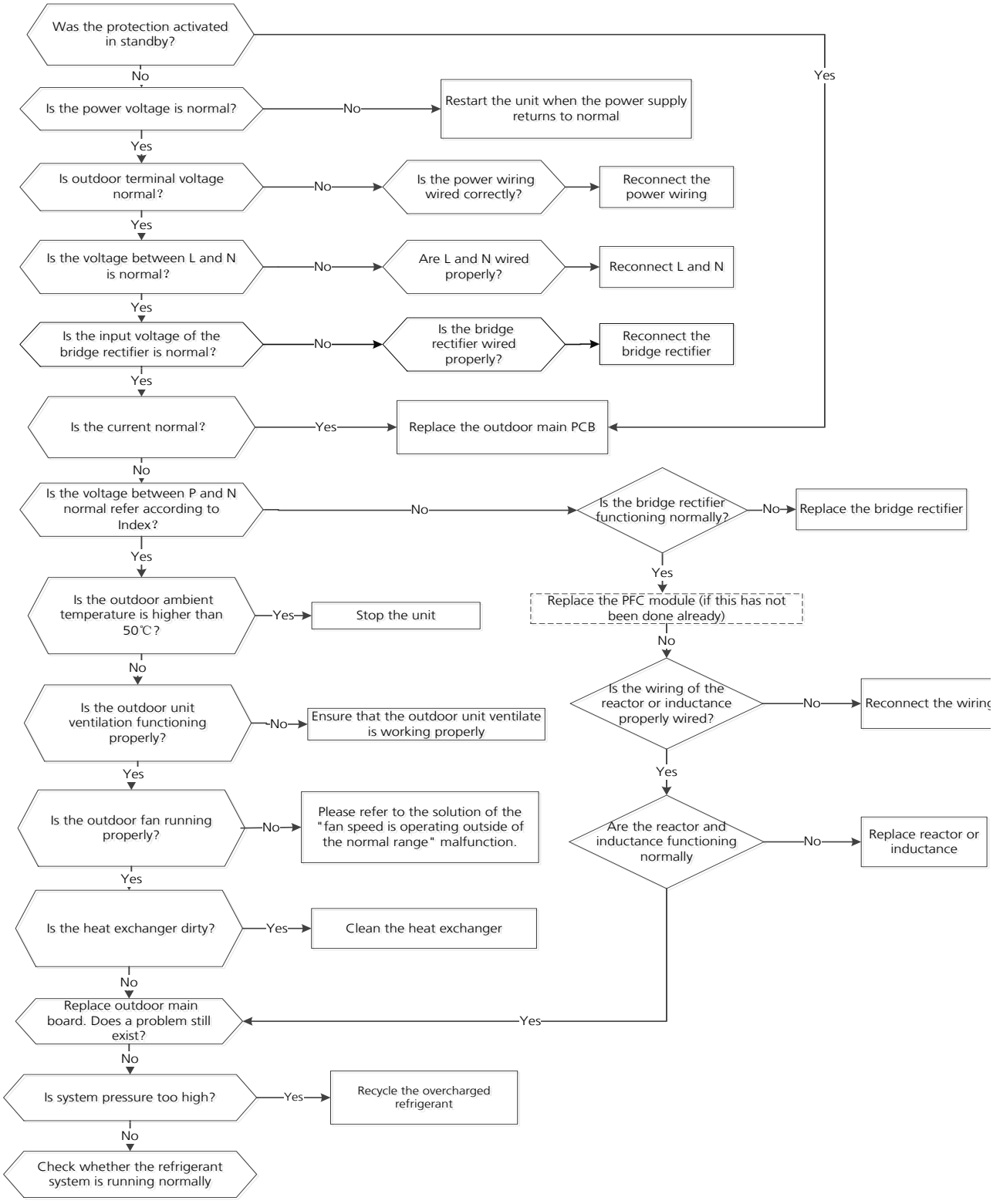

Note: For certain models, outdoor PCB could not be removed separately. In this case, the outdoor electric control box should be replaced as a whole.

6.15 PC 0F(PFC module protection diagnosis and solution)

Description: When the voltage signal that IPM send to compressor drive chip is abnormal, the LED displays the failure code and the AC turns off.

Recommended parts to prepare:

- Connection wires
- Inductance
- Outdoor main PCB
- PFC module

Troubleshooting and repair:

At first test the resistance between every two ports of U, V, W of IPM and P, N. If any result of them is 0 or close to 0, the IPM is defective. Otherwise, please follow the procedure below:

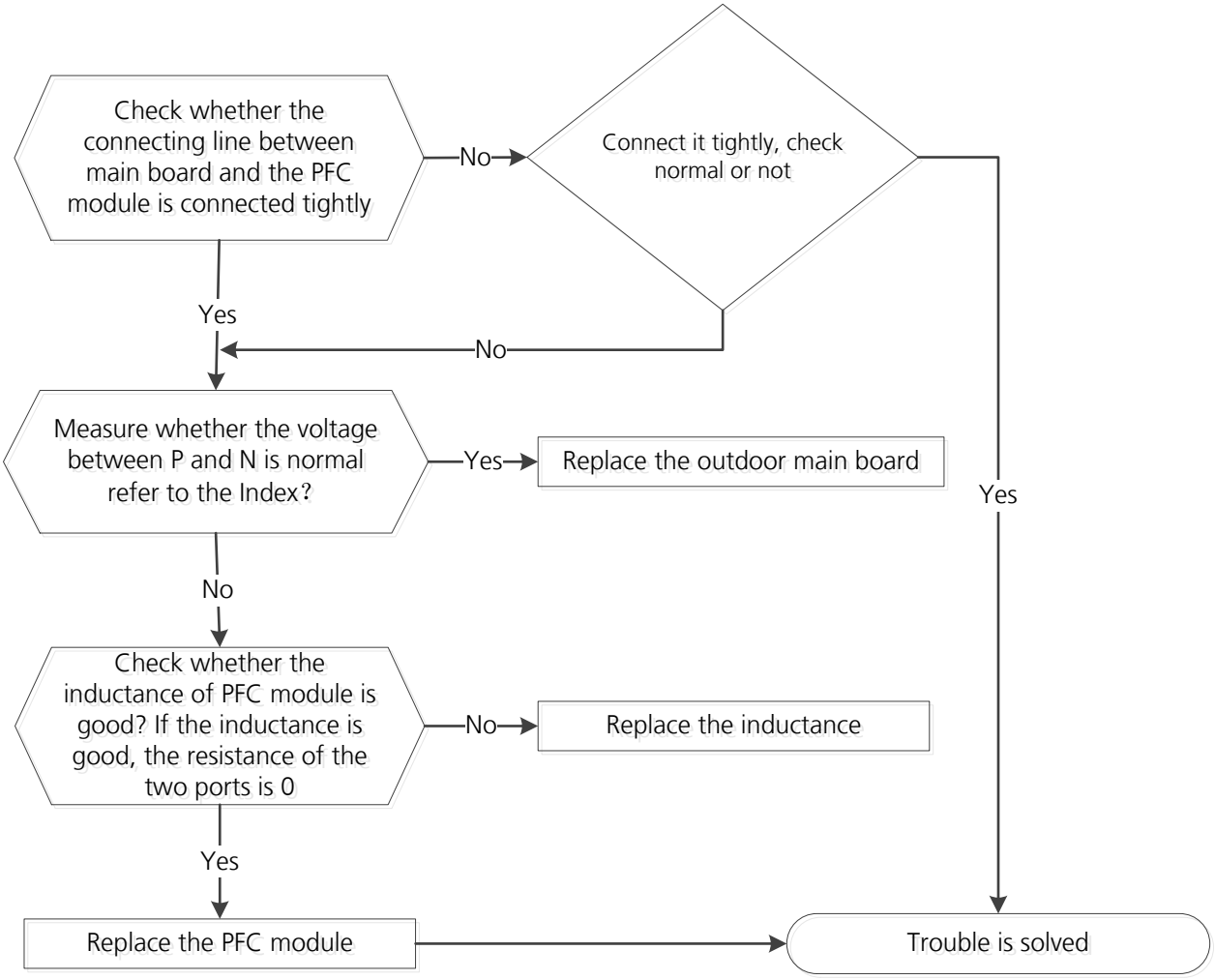

6.16 EC 72 (Lack phase failure of outdoor DC fan motor diagnosis and solution)

Description: When the three-phase sampling current of the DC motor is abnormal, especially when the current of one or more phases is always small and almost 0, the LED displays the failure code.

Recommended parts to prepare:

- Connection wire
- Fan motor
- Outdoor PCB

Troubleshooting and repair:

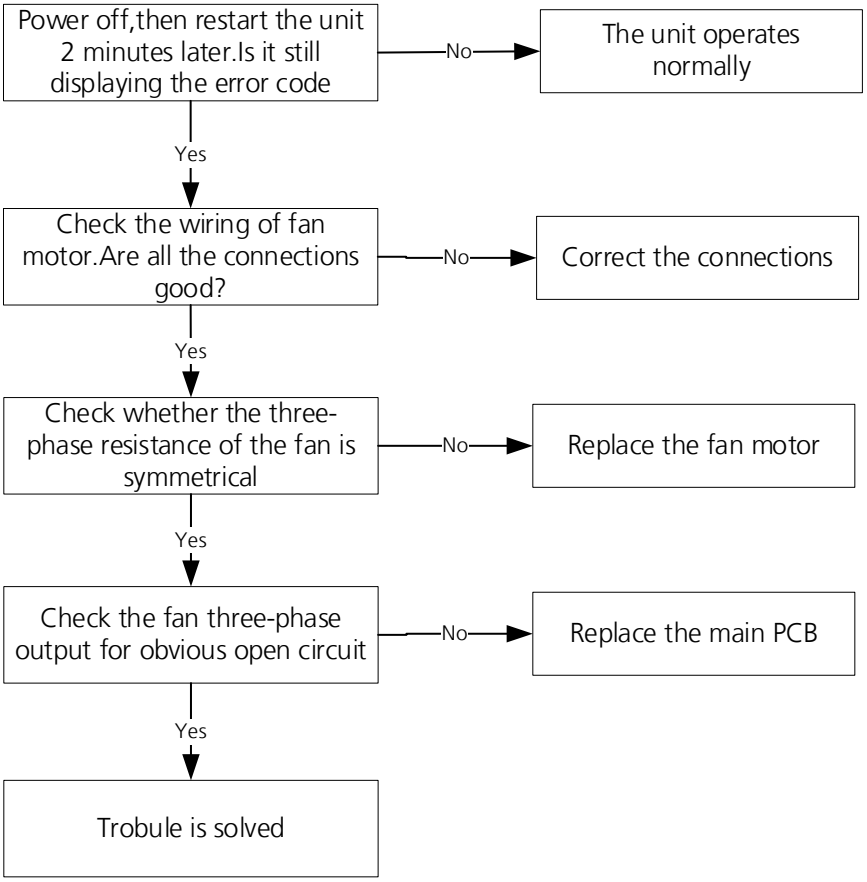

6.17 PC 43 (Outdoor compressor lack phase protection diagnosis and solution)

Description: When the three-phase sampling current of the compressor is abnormal, especially when the current of one or more phases is always small and almost 0, the LED displays the failure code

Recommended parts to prepare:

- Connection wire
- Compressor
- Outdoor PCB

Troubleshooting and repair:

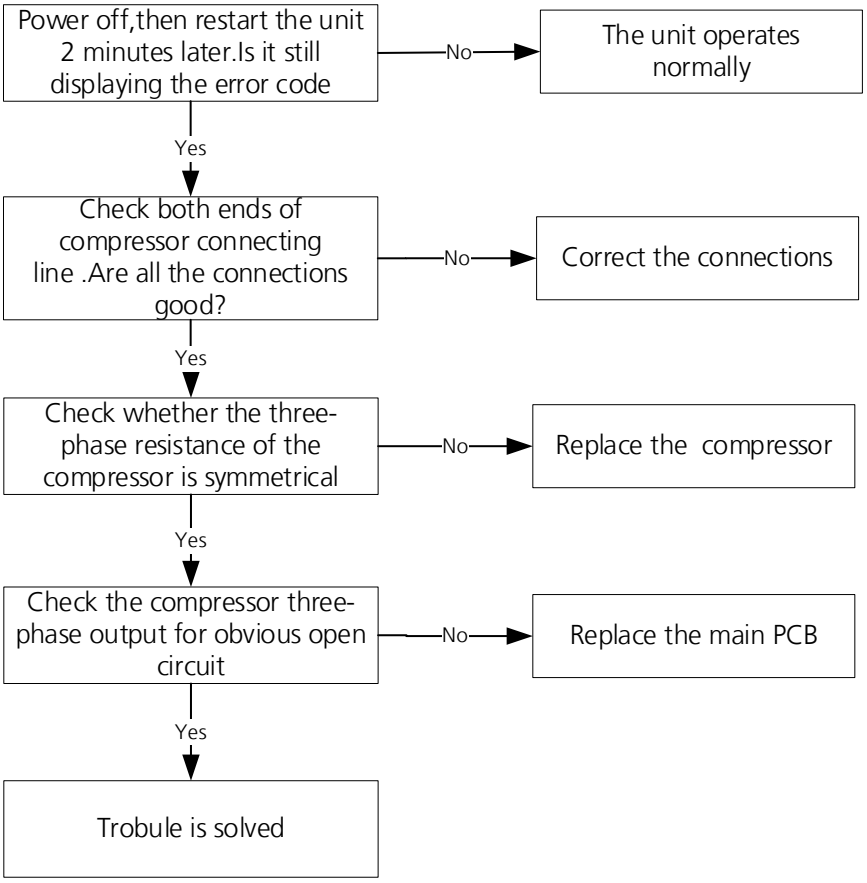

6.18 PC 45 (Outdoor unit IR chip drive failure diagnosis and solution)

Description: When the IR chip detects its own parameter error, the LED displays the failure code when power on.

Recommended parts to prepare:

- Inverter module PCB.

Troubleshooting and repair:

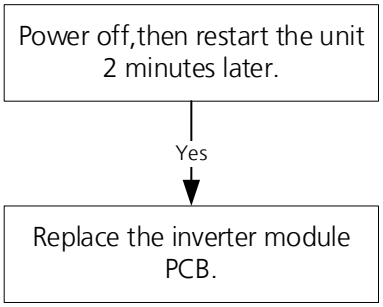

6.19 PC 0L (Low ambient temperature protection)

Description: It is a protection function. When compressor is off, outdoor ambient temperature(T4) is lower than -35°C. for 10s, the AC will stop and display the failure code.

When compressor is on, outdoor ambient temperature(T4) is lower than -40°C.for 10s, the AC will stop and display the failure code.

When outdoor ambient temperature(T4) is no lower than -32°C.for 10s, the unit will exit protection.

6.20 PC 30 (High pressure protection diagnosis and solution)

Description: Outdoor pressure switch cut off the system because high pressure is higher than 4.4 MPa

Recommended parts to prepare:

- Connection wires
- Pressure switch
- Outdoor fan
- Outdoor main PCB

Troubleshooting and repair:

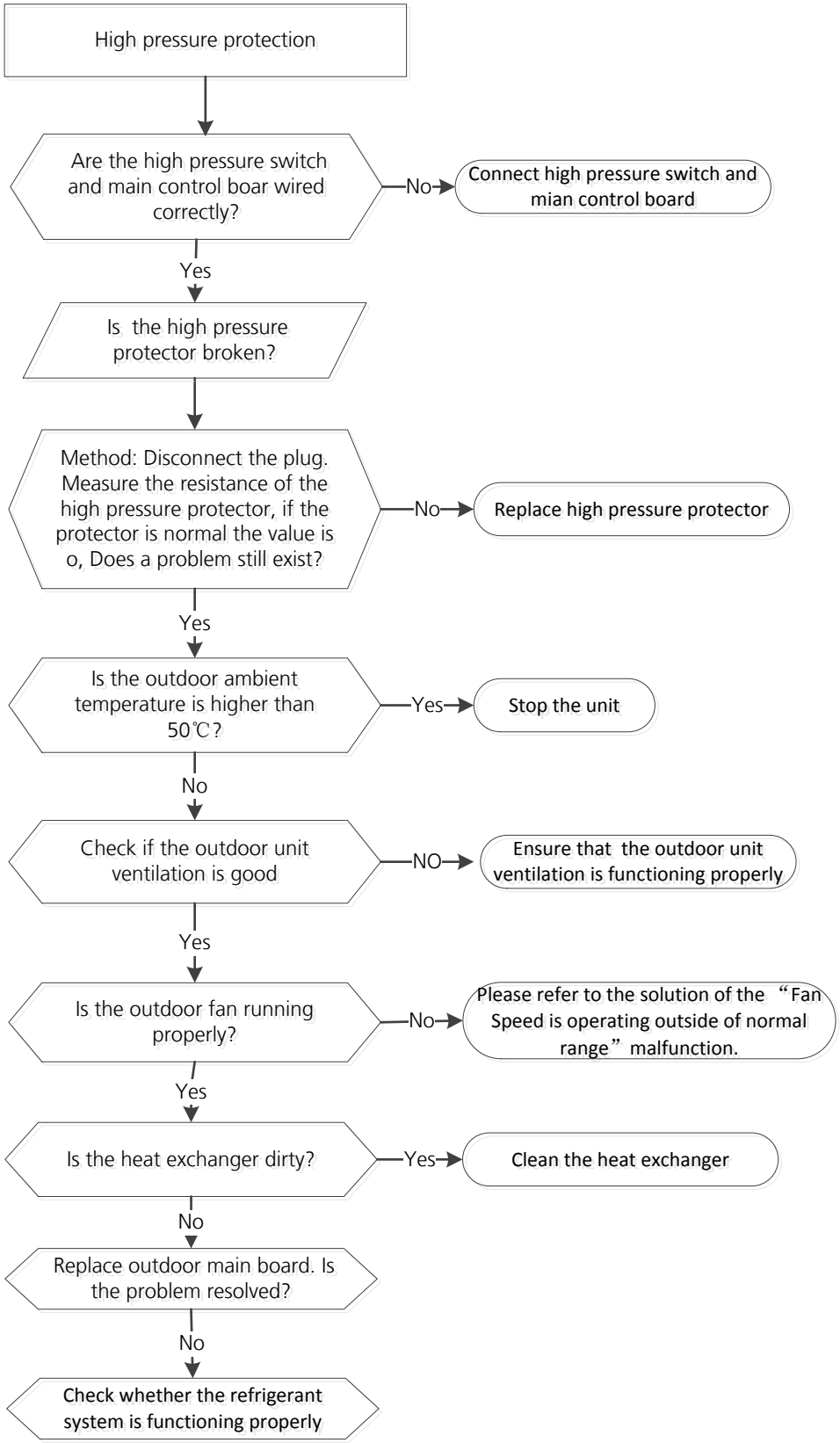
High pressure protection
Are the high pressure switch and main control boar wired correctly?
No
Connect high pressure switch and mian control board
Yes
Is the high pressure protector broken?
Method: Disconnect the plug. Measure the resistance of the high pressure protector, if the protector is normal the value is o, Does a problem still exist?
No
Replace high pressure protector
Yes
Is the outdoor ambient temperature is higher than 50℃?
Yes
Stop the unit
No
Check if the outdoor unit ventilation is good
NO
Ensure that the outdoor unit ventilation is functioning properly
Yes
Is the outdoor fan running properly?
No
Please refer to the solution of the "Fan Speed is operating outside of normal range" malfunction.
Yes
Is the heat exchanger dirty?
Yes
Clean the heat exchanger
No
Replace outdoor main board. Is the problem resolved?
No
Check whether the refrigerant system is functioning properly

6.21 PC 0A (High temperature protection of condenser diagnosis and solution)

Description: When the outdoor pipe temperature is more than 65°C, the unit stops. It starts again only when the outdoor pipe temperature is less than 52°C.

Recommended parts to prepare:

- Connection wires
- Condenser temperature sensor
- Outdoor fan
- Outdoor main PCB
- Refrigerant

Troubleshooting and repair:

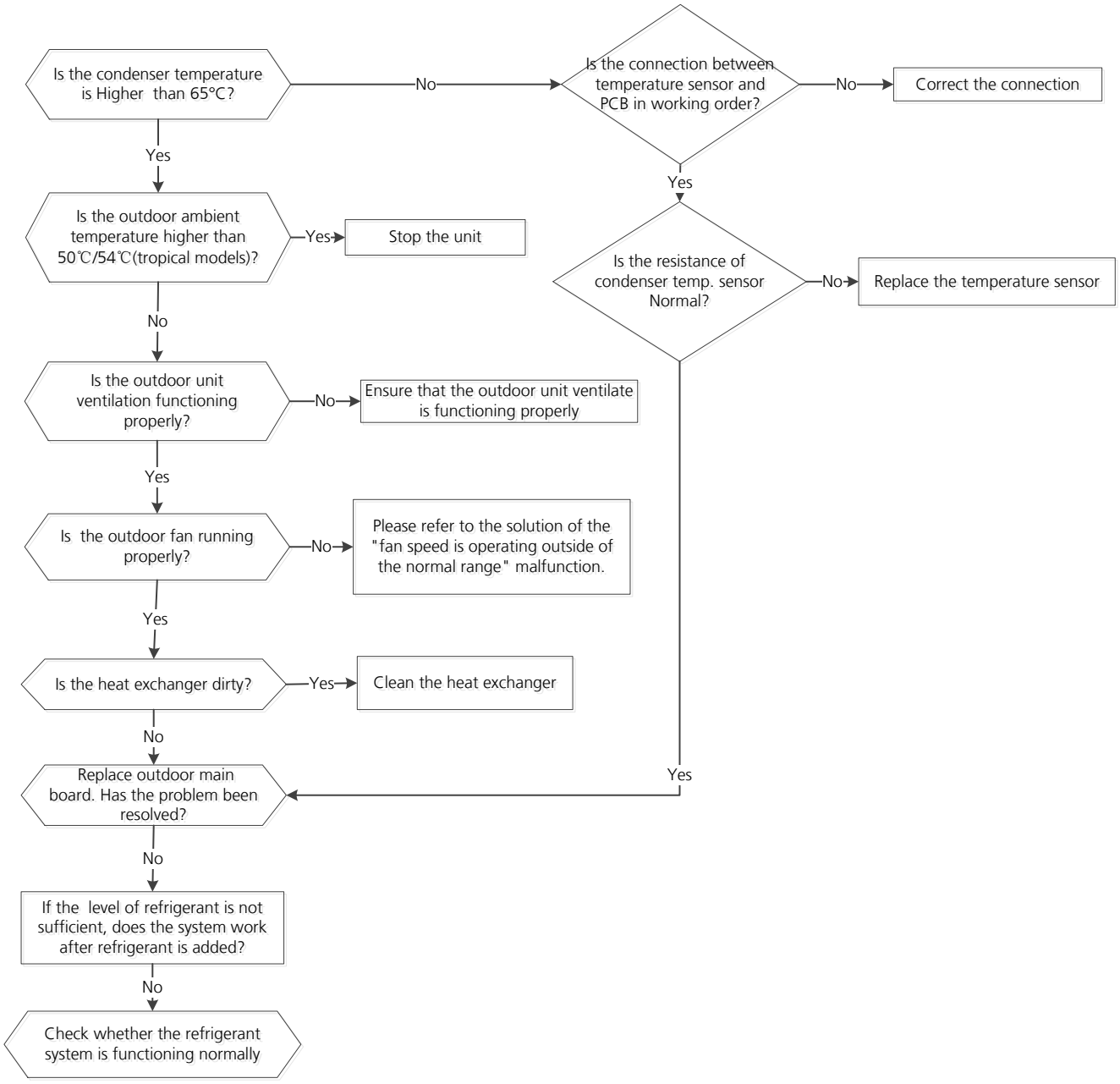

6.22 PC 06 (Discharge temperature protection of compressor diagnosis and solution)

Description: If the compressor discharge temperature exceeds a certain level for nine seconds, the compressor ceases operation, the LED displays the failure code

Recommended parts to prepare:

- Connection wires
- Discharge temperature sensor
- Additional refrigerant
- Outdoor main PCB

Troubleshooting and repair:

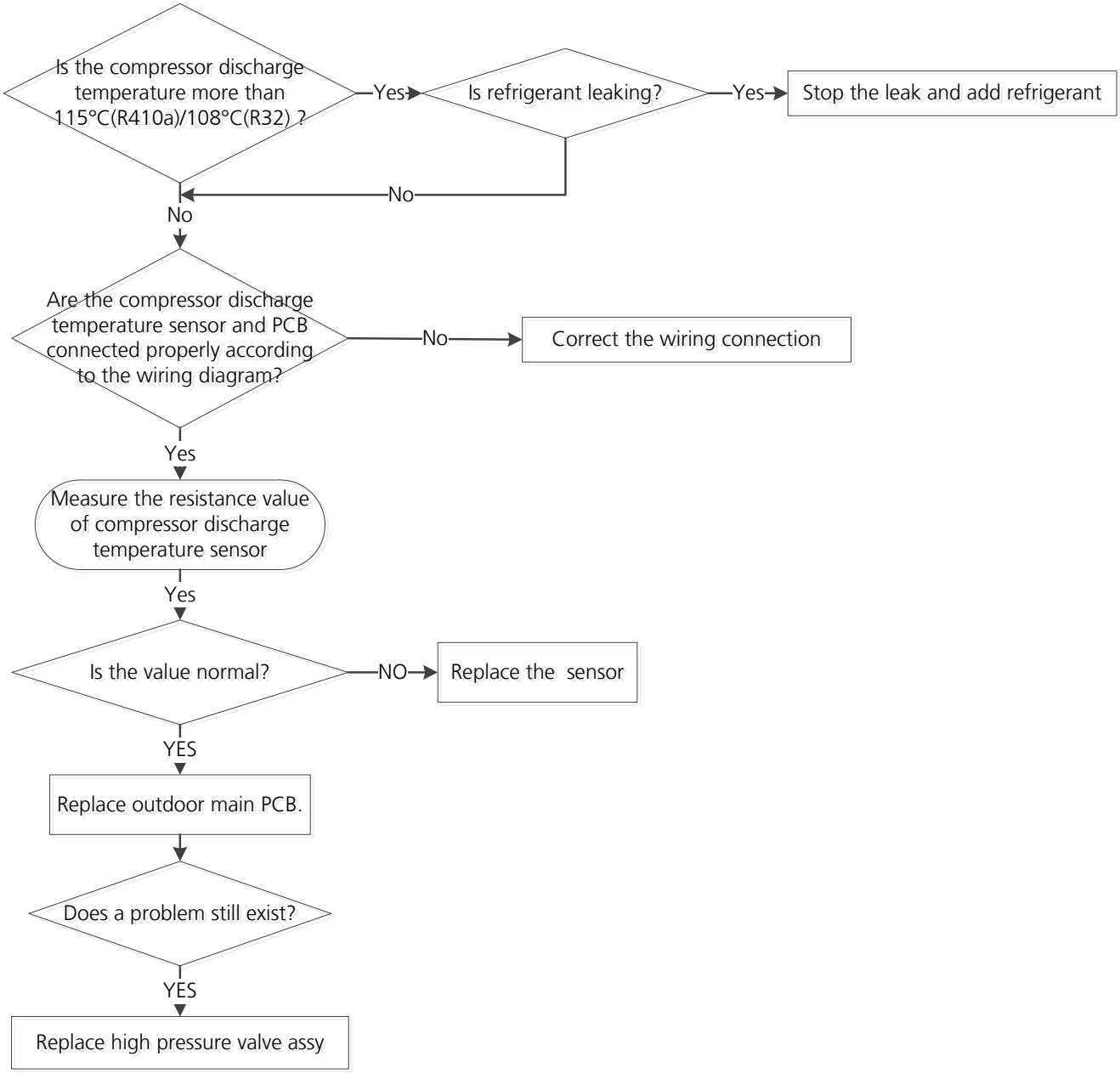

Note: For certain models, outdoor unit uses combination sensor, T3,T4 and TP are the same of sensor. This picture and the value are only for reference, actual appearance and value may vary.

8. Check Procedures

8.1 Temperature Sensor Check

WARNING

Be sure to turn off all power supplies or disconnect all wires to avoid electric shock. Operate after compressor and coil have returned to normal temperature in case of injury.

1. Disconnect the temperature sensor from PCB (Refer to Chapter 5&6. Indoor&Outdoor Unit Disassembly).
2. Measure the resistance value of the sensor using a multi-meter.
3. Check corresponding temperature sensor resistance value table (Refer to Chapter 8. Appendix).

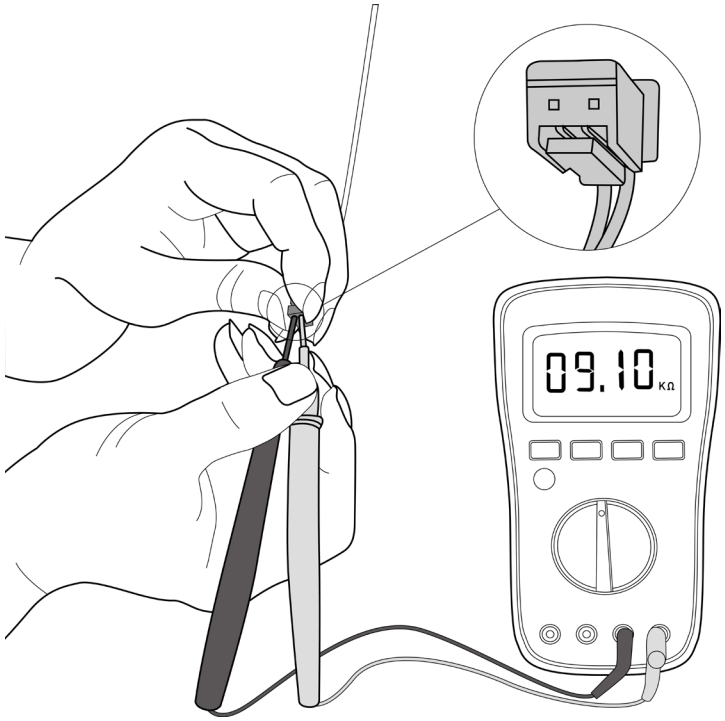

Note: The picture and the value are only for reference, actual condition and specific value may vary.

8.2 Compressor Check

1. Disconnect the compressor power cord from outdoor PCB (Refer to Chapter 6. Outdoor Unit Disassembly)).
2. Measure the resistance value of each winding using a multi-meter.
3. Check the resistance value of each winding in the following table.

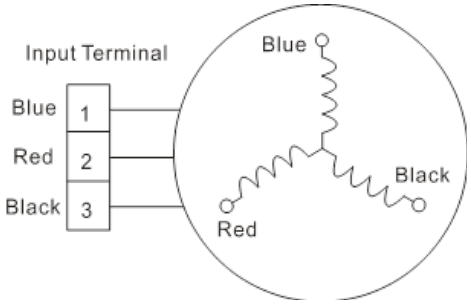

Resistance Value	KSN98D64UFZ3	KSN140D21UFZ	KTM240D43UKT
Blue-Red	2.7Ω	1.28Ω	1.03Ω
Blue-Black			
Red-Black			

Resistance Value	KTF250D22UMT	KTF310D43UMT	KTQ420D1UMU
Blue-Red	0.75Ω	0.65Ω	0.37Ω
Blue-Black			
Red-Black			

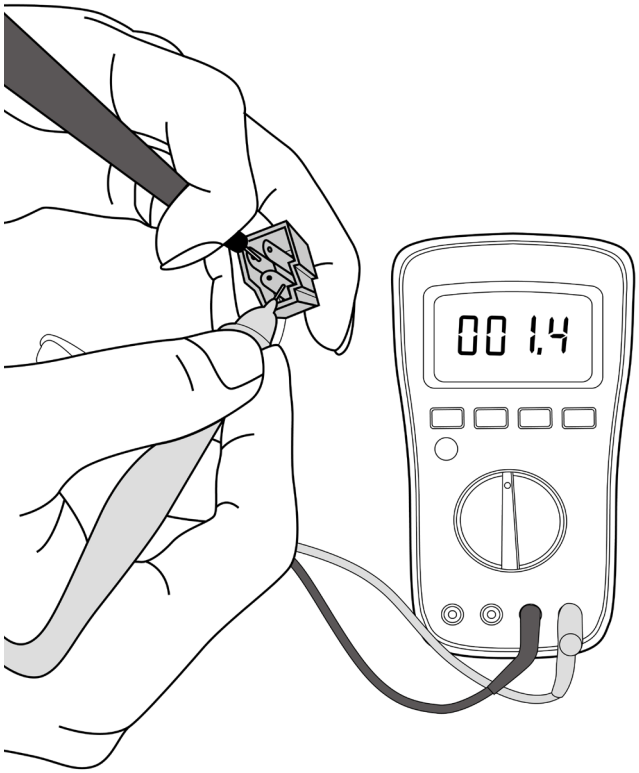

Note: The picture and the value are only for reference, actual condition and specific value may vary.

8.3 IPM Continuity Check

WARNING

Electricity remains in capacitors even when the power supply is off.
Ensure the capacitors are fully discharged before troubleshooting.

1. Turn off outdoor unit and disconnect power supply.
2. Discharge electrolytic capacitors and ensure all energy-storage unit has been discharged.
3. Disassemble outdoor PCB or disassemble IPM board.
4. Measure the resistance value between P and U(V, W, N); U(V, W) and N.

Digital tester		Resistance value	Digital tester		Resistance value
(+)Red	(-)Black		(+)Red	(-)Black	
P	N	∞ (Several MΩ)	U	N	∞ (Several MΩ)
	U		V		
	V		W		
	W		-		

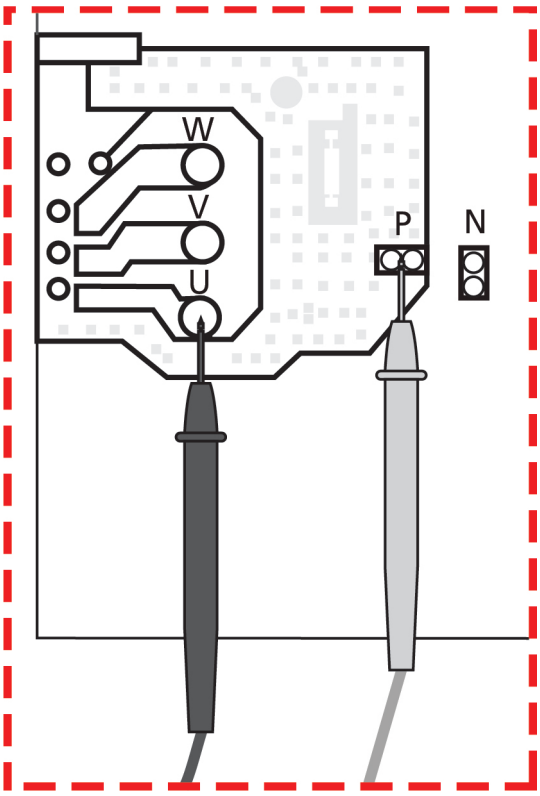

Note: The picture and the value are only for reference, actual condition and specific value may vary.

Indoor Unit Disassembly-Console

Contents

1. Indoor Unit Disassembly 1

1.1 Filter 2

1.2 Electrical Parts 3

1.3 Water Collector 7

1.4 Louver Motor of Water Collector 8

1.5 Louver Motor of Air Outlet Subassembly 9

1.6 Evaporator 11

1.7 Fan Motor and Fan 12

1. Indoor Unit Disassembly

1.1 Filter

Procedure	Illustration
1) Slide the two stoppers located on the left and right sides. (see CJ_ CONSOLE_001)	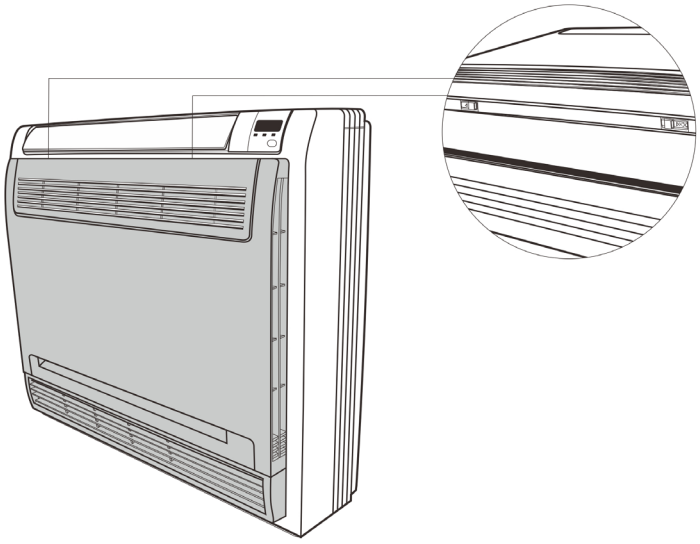 CJ_CONSOLE_001
2) Open the front panel. (see CJ_ CONSOLE_002) 3) Pull out the filter (see CJ_AHU_002)	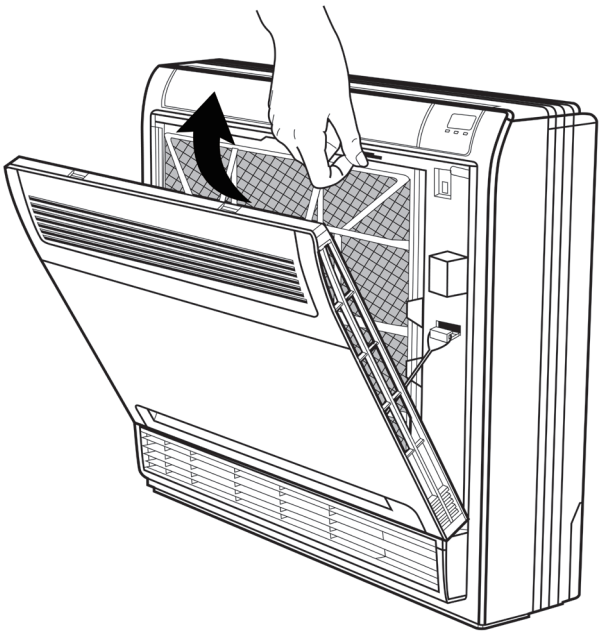 CJ_CONSOLE_002

1.2 Electrical Parts (Antistatic gloves must be worn.)

Note: Remove the front panel (refer to 11. filter) before disassembling electrical parts.

Procedure	Illustration
1) Remove the string. 2) Remove the front panel. (see CJ_ CONSOLE_003)	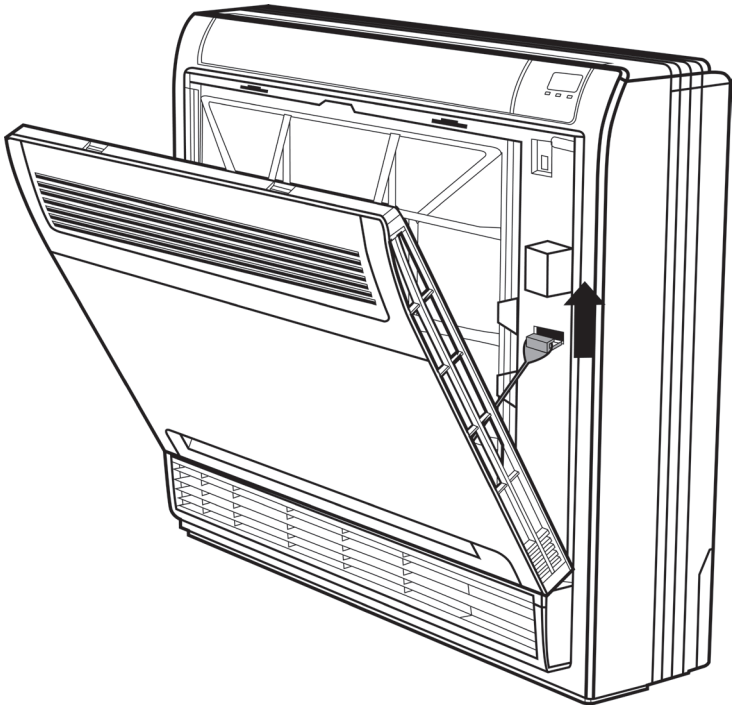 **CJ_CONSOLE_003**
3) Remove 4 screws. (see CJ_ CONSOLE_004) 4) Remove the panel frame assembly (see CJ_AHU_004)	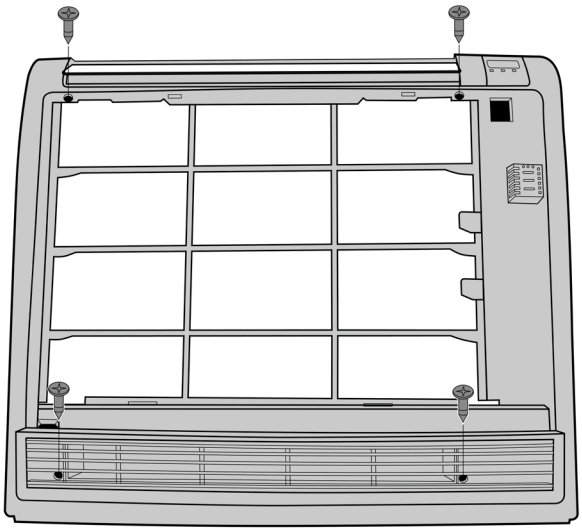 **CJ_CONSOLE_004**

Note: This section is for reference only. Actual unit appearance may vary.

Procedure	Illustration
5) Remove 3 screws(one of screws is fixing electric control box, two of screws are fixing grounding wire.). (see CJ_ CONSOLE_005)	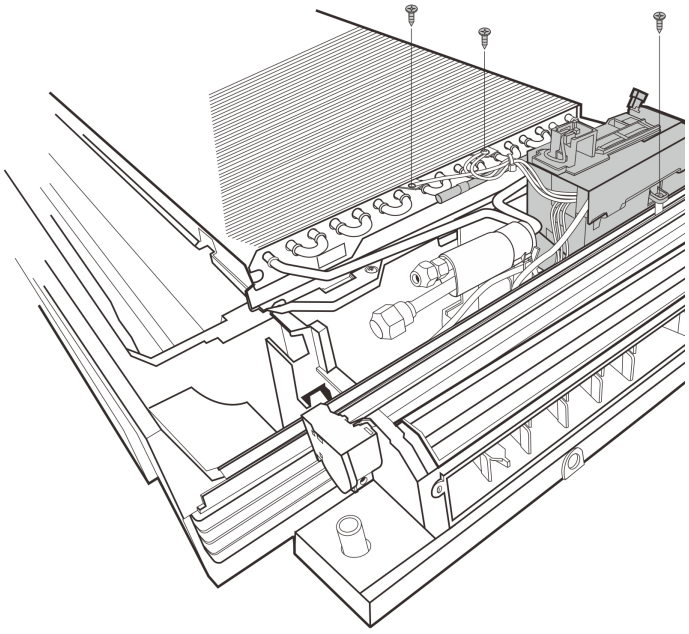 **CJ_CONSOLE_005**
6) Disconnect the connect of fan between main control board. (see CJ_ CONSOLE_006)	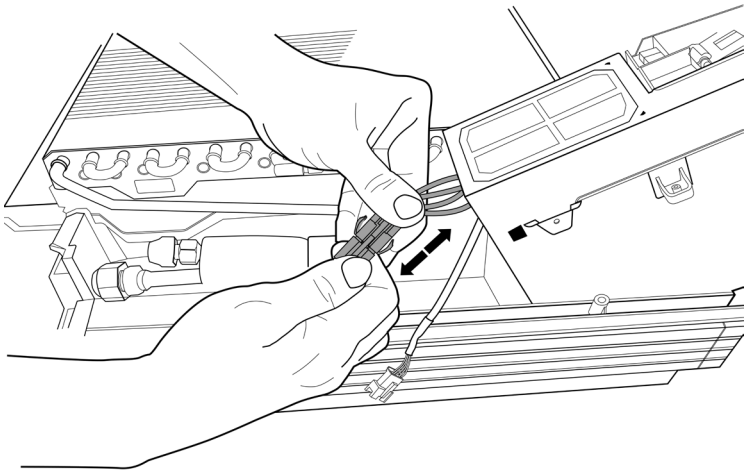 **CJ_CONSOLE_006**

Note: This section is for reference only. Actual unit appearance may vary.

Procedure	Illustration
5) Remove the supporter. (see CJ_CONSOLE_007)	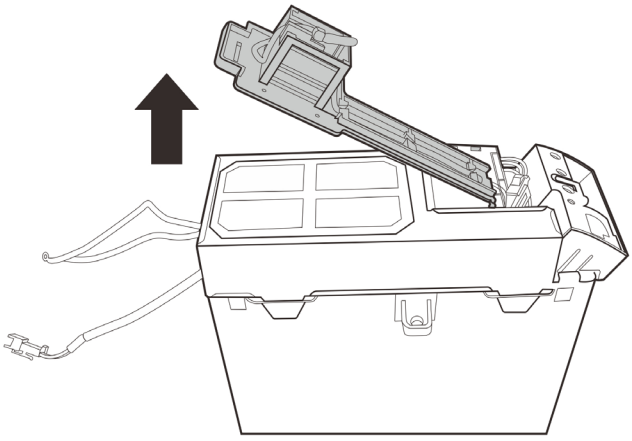 CJ_CONSOLE_007
6) Remove the fixing board. (see CJ_CONSOLE_008)	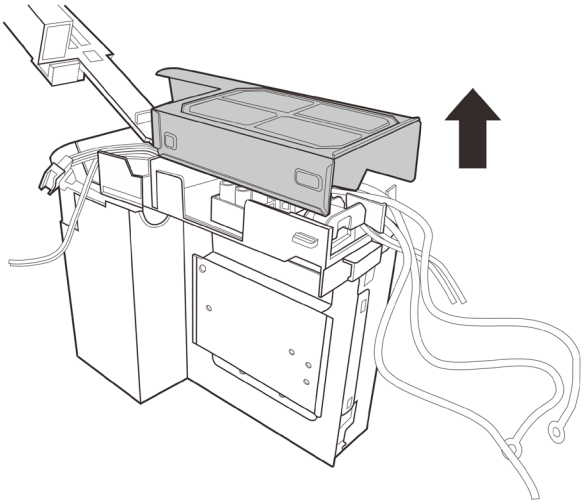 CJ_CONSOLE_008

Note: This section is for reference only. Actual unit appearance may vary.

Procedure	Illustration
5) Remove the seal plate. (see CJ_ CONSOLE_009)	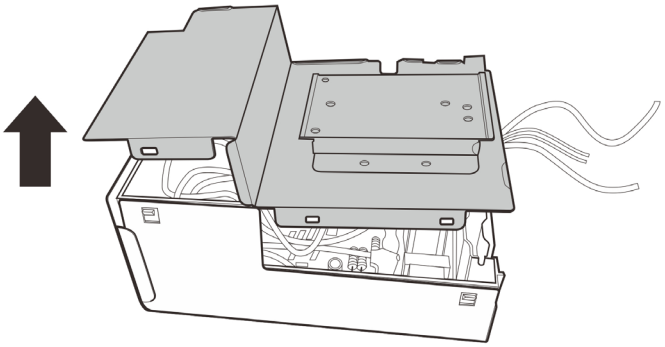 CJ_CONSOLE_009
6) Remove two screws and disconnect all wires and connectors to remove the main control board.(see CJ_ CONSOLE_010)	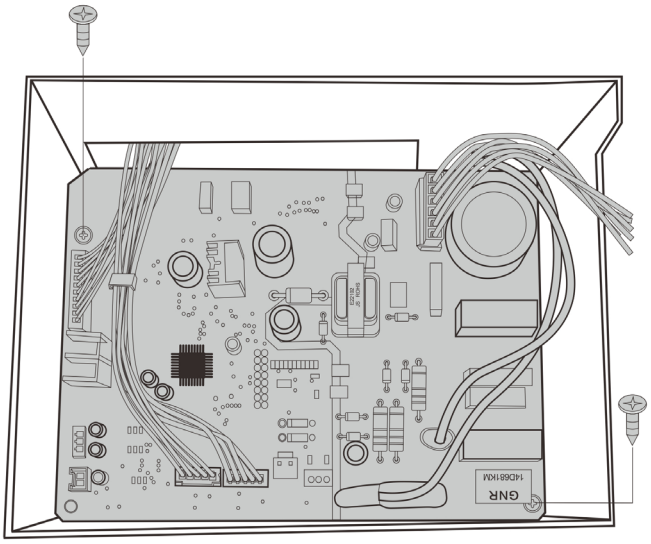 CJ_CONSOLE_010

Note: This section is for reference only. Actual unit appearance may vary.

1.3 Water Collector

Note: Remove the front panel and panel frame (refer to 1.1 filter and 1.2. electrical parts) before disassembling water collector.

Procedure	Illustration
1) Remove 2 screws. (see CJ_CONSOLE_011)	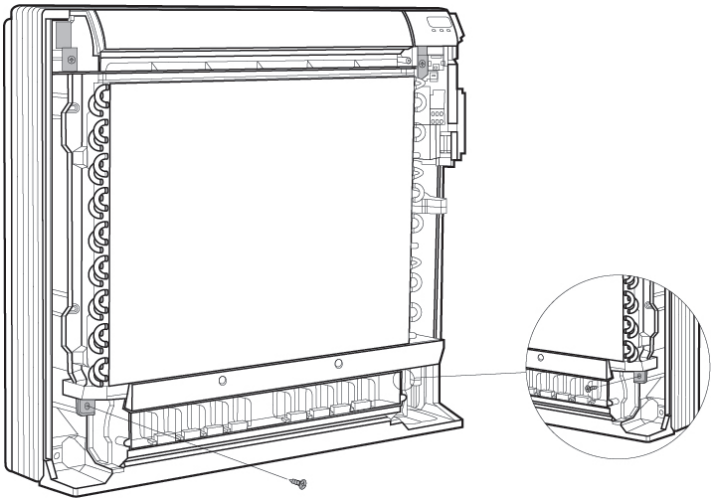 CJ_CONSOLE_011
2) Take out the water collector subassembly. (see CJ_CONSOLE_012)	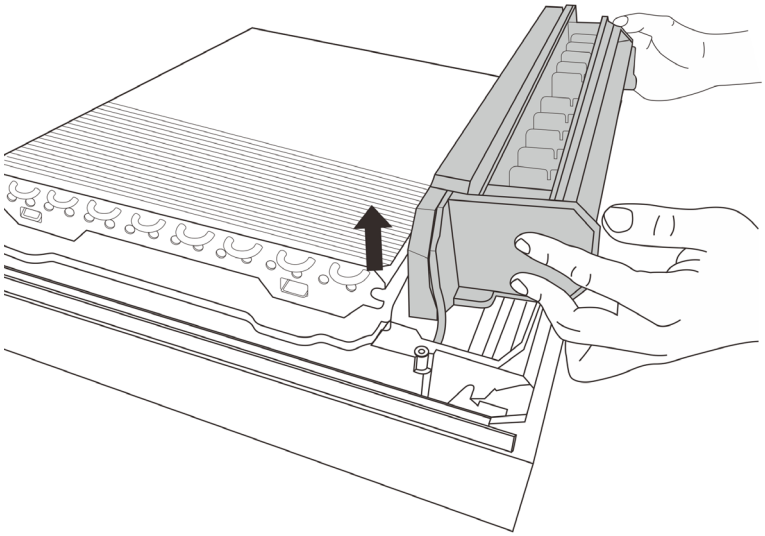 CJ_CONSOLE_012

Note: This section is for reference only. Actual unit appearance may vary.

1.4 Louver Motor of Water Collector

Note: Remove the front panel and panel frame (refer to 1.1 filter and 1.2 electrical parts) before disassembling louver motor of water collector.

Procedure	Illustration
1) Remove the cover of louver motor. (see CJ_CONSOLE_013) 2) Remove 2 screws. (see CJ_CONSOLE_013) 3) Remove the louver motor.	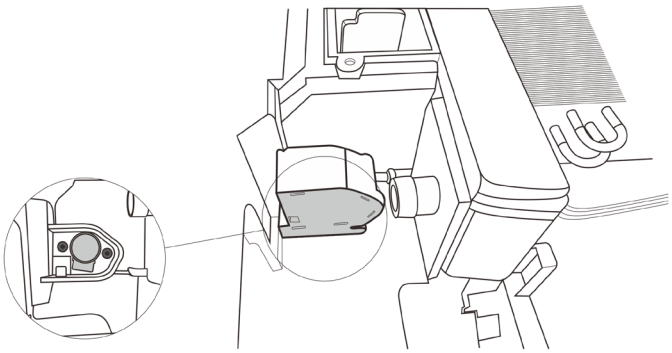 **CJ_CONSOLE_013**

Note: This section is for reference only. Actual unit appearance may vary.

1.5 Louver Motor of Air Outlet Subassembly

Note: Remove the front panel and panel frame (refer to 1.1 filter and 1.2 electrical parts) before disassembling louver motor of air outlet subassembly.

Procedure	Illustration
1) Remove 2 screws. (see CJ_CONSOLE_014)	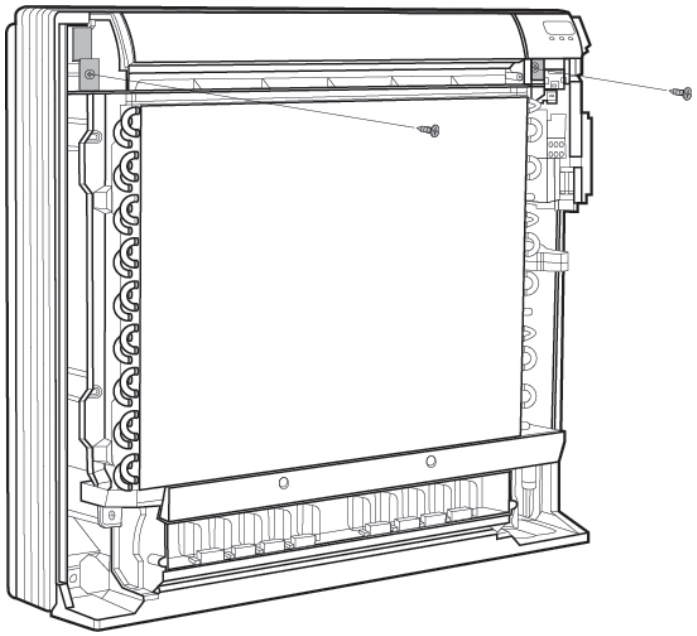 CJ_CONSOLE_014
2) Remove air outlet subassembly. (see CJ_CONSOLE_015)	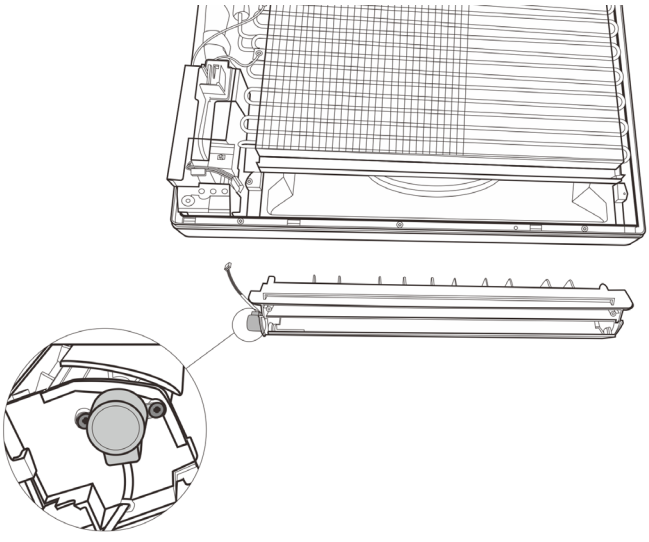 CJ_CONSOLE_015

Note: This section is for reference only. Actual unit appearance may vary.

Procedure	Illustration
3) Remove 2 screws of motor. (see CJ_ CONSOLE_016) 4) Remove the motor.(see CJ_ CONSOLE_016)	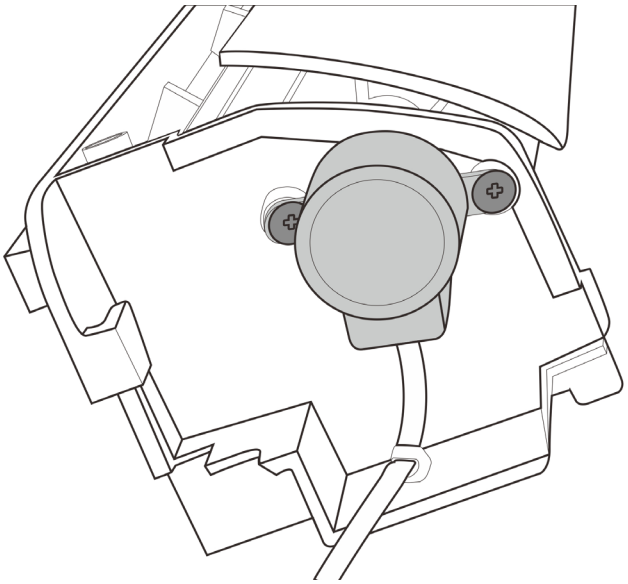 **CJ_CONSOLE_016**

Note: This section is for reference only. Actual unit appearance may vary.

1.6 Evaporator

Note: Remove the front panel, electrical parts and air outlet subassembly (refer to 1.1 filter, 1.2 electrical parts and 1.5 air outlet subassembly) before disassembling louver motor of air outlet subassembly.

Procedure	Illustration
1) Release pipe strap. (see CJ_CONSOLE_017) 2) Release 4 hooks(two on the right side and two on the left side). (see CJ_CONSOLE_017 & 018)	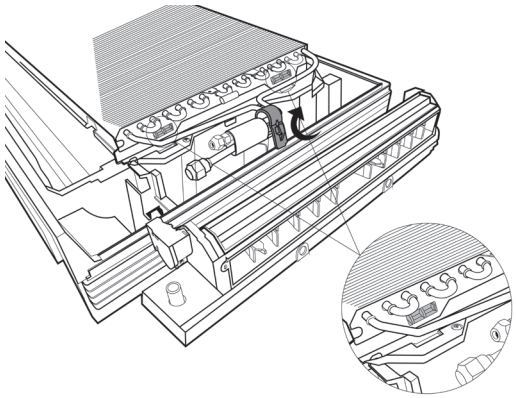 **CJ_CONSOLE_017**
3) Take out evaporator subassembly. (see CJ_CONSOLE_018)	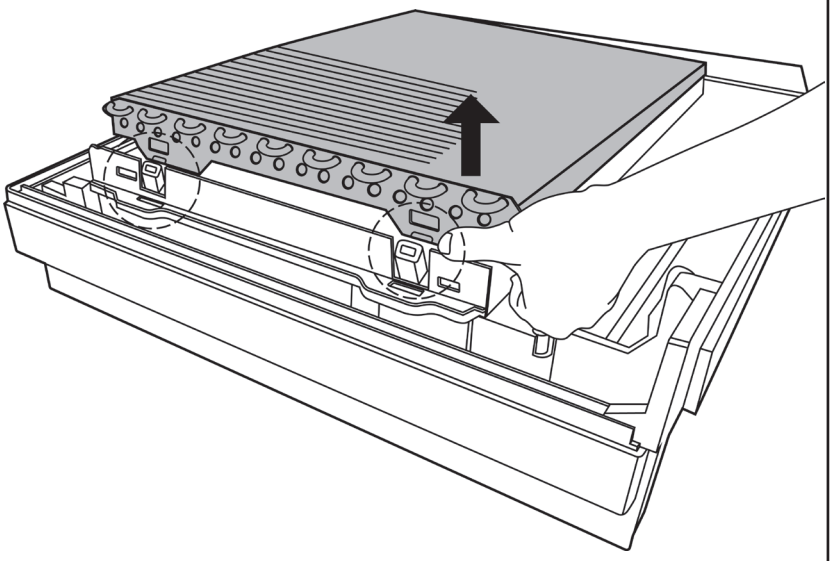 **CJ_CONSOLE_018**

Note: This section is for reference only. Actual unit appearance may vary.

1.7 Fan and Fan Motor

Note: Remove the evaporator subassembly (refer to 1.1, 1.2, 1.5 and 1.6) before disassembling fan.

Procedure	Illustration
1) Remove 4 screws of ventilation subassembly. (see CJ_CONSOLE_019)	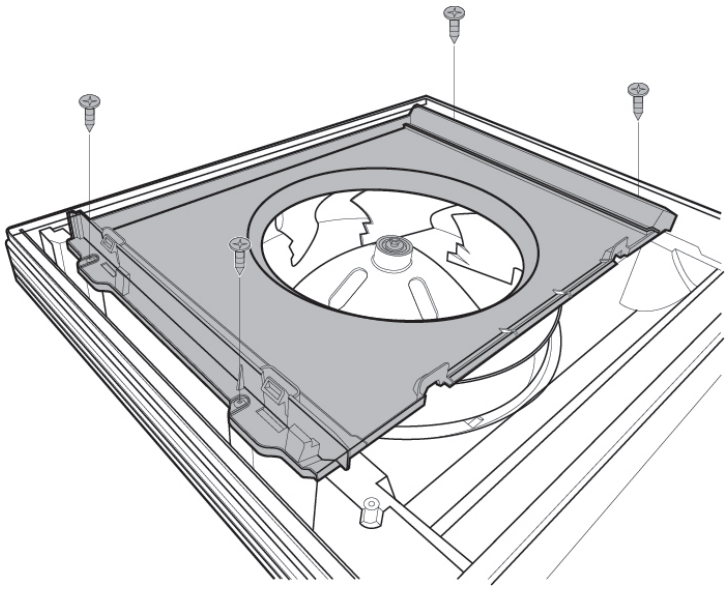 **CJ_CONSOLE_019**
2) Remove the fixing nut of the fan and then pull up the fan. (see CJ_CONSOLE_020)	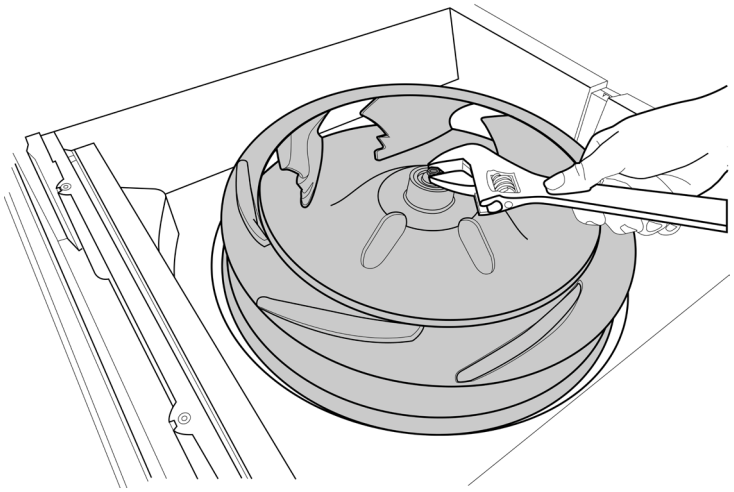 **CJ_CONSOLE_020**

Note: This section is for reference only. Actual unit appearance may vary.

Procedure	Illustration
3) Remove 4 fixing nuts of fan motor.. (see CJ_CONSOLE_021)	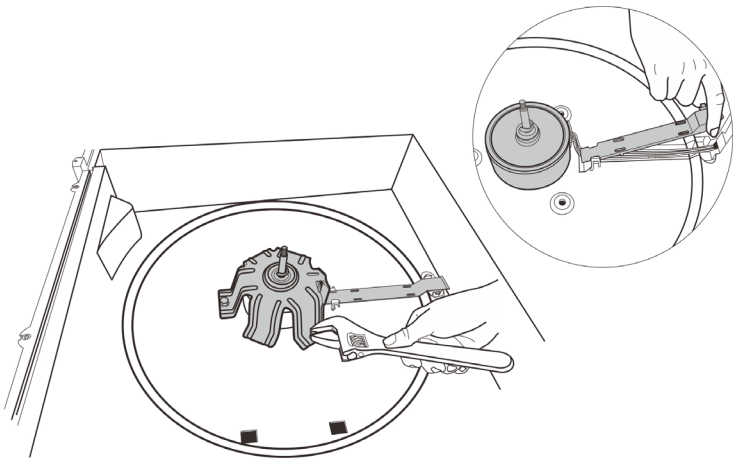 CJ_CONSOLE_021

Note: This section is for reference only. Actual unit appearance may vary.

Indoor Unit Disassembly-Compact Cassette

Contents

1. Indoor Unit Disassembly 1

1.1 Front Panel and Display Board 2

1.2 Electrical Parts 5

1.3 Fan Motor and Fan 7

1.4 Water Pump 9

1.5 Evaporator 11

1. Indoor Unit Disassembly

1.1 Front Panel and Display Board

Procedure	Illustration
1) Release 2 hooks and open the panel. (see CJ_MCA_001)	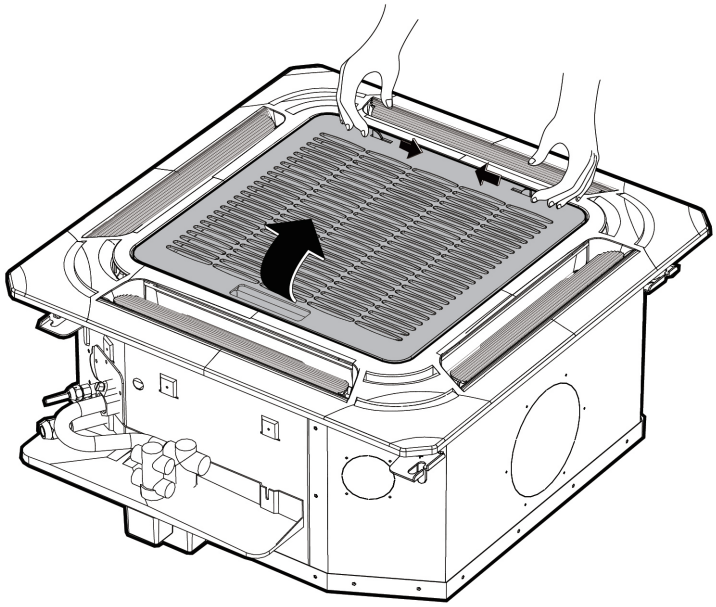 CJ_MCA_001
2) Remove two screws of wire line. (see CJ_MCA_002)	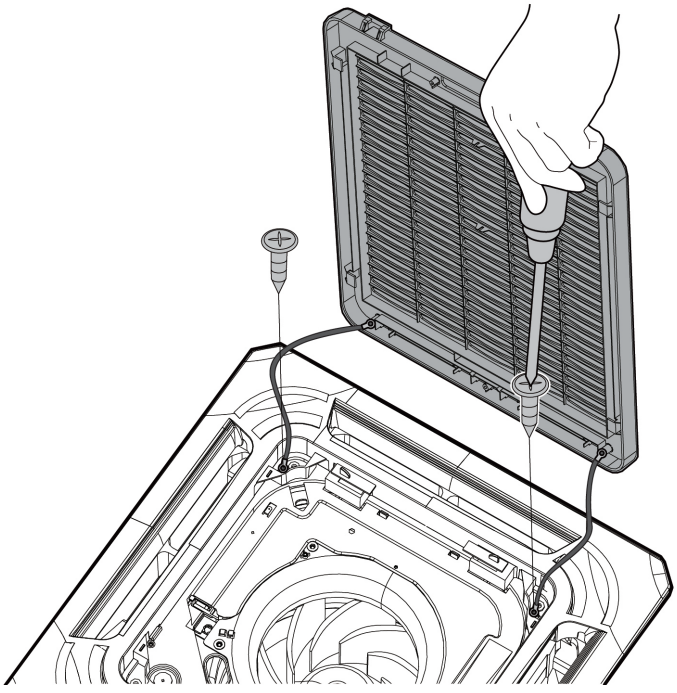 CJ_MCA_002

Note: This section is for reference only. Actual unit appearance may vary.

Procedure	Illustration
3) Release the hook then pull up the filter(see CJ_MCA_003)	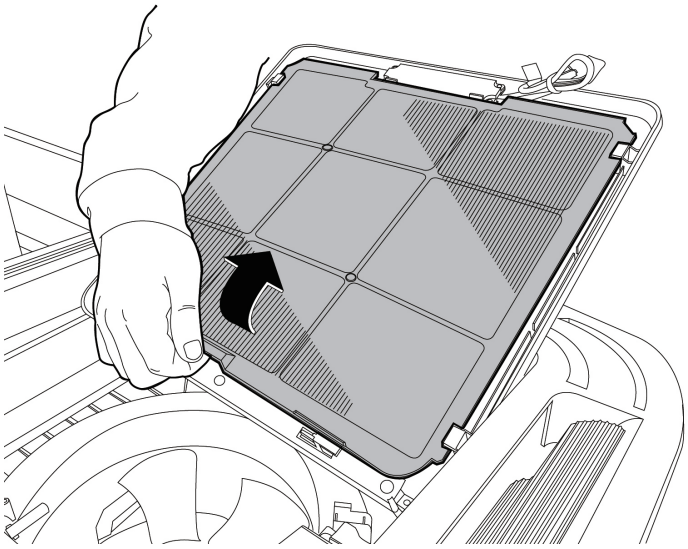 CJ_MCA_003
4) Remove 4 screws of cover and remove the display board(see CJ_MCA_004)	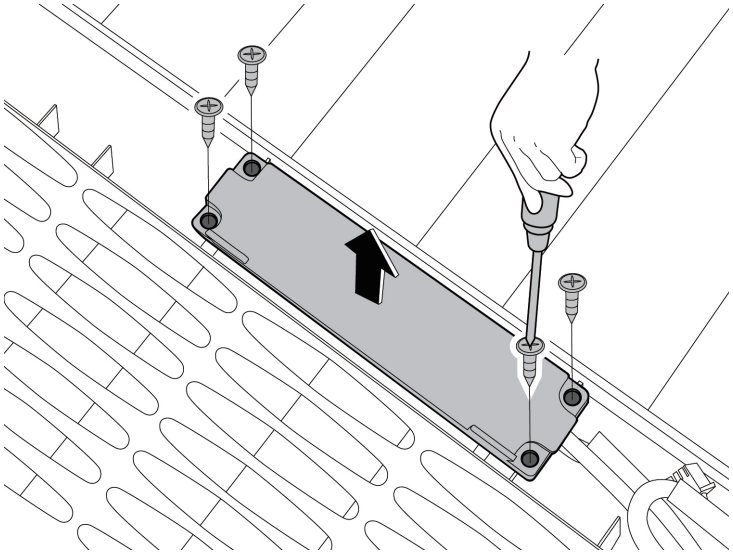 CJ_MCA_004

Note: This section is for reference only. Actual unit appearance may vary.

Procedure	Illustration
5) Remove 2 screws of display board and remove PCB.(see CJ_MCA_005)	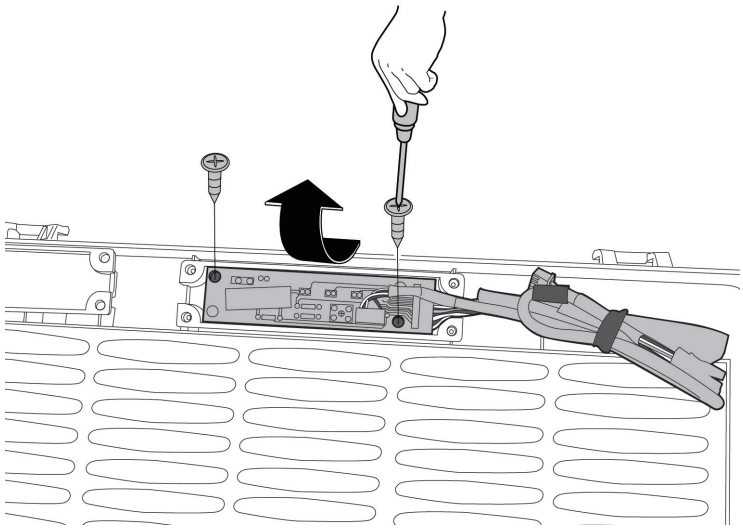 CJ_MCA_005

Note: This section is for reference only. Actual unit appearance may vary.

1.2 Electrical Parts(Antistatic gloves must be worn.)

Note: Remove the front panel (refer to 1.1 Front Panel and display) before disassembling electrical parts.

Procedure	Illustration
1) Remove 4 screws of the panel and pull up the panel. (see CJ_MCA_006)	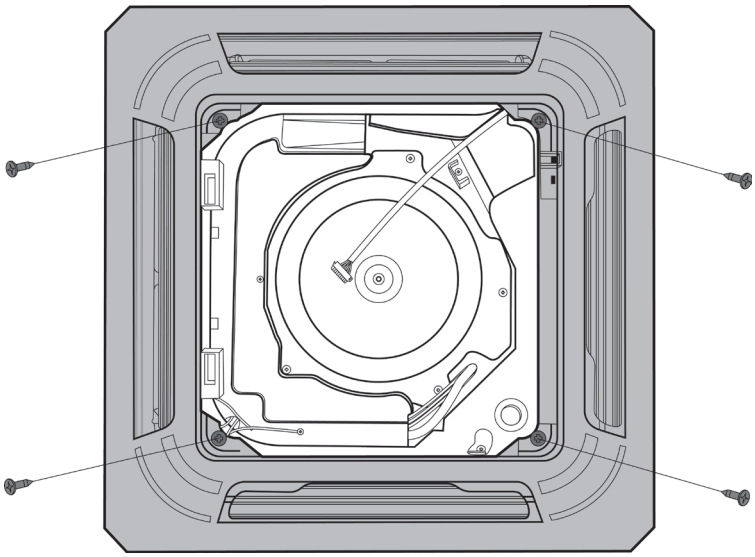 CJ_MCA_006
2) Remove 3 screws of electrical cover. (see CJ_MCA_007)	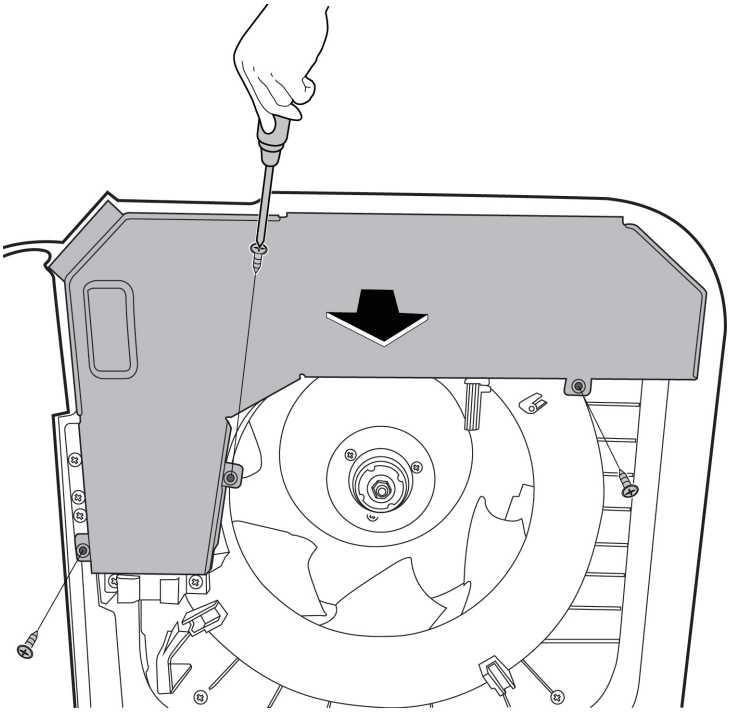 CJ_MCA_007

Note: This section is for reference only. Actual unit appearance may vary.

Procedure	Illustration
3) Disconnect the connectors of PCB. (see CJ_MCA_008)	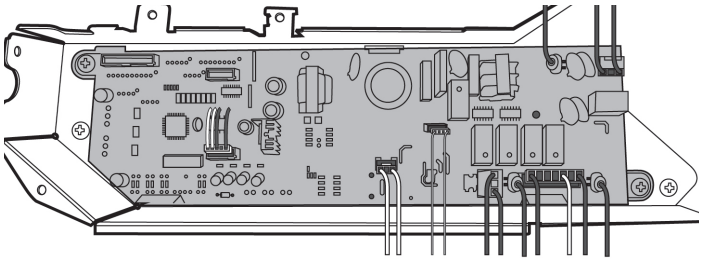 CJ_MCA_008
4) Remove 2 screws of main control board and remove PCB.(see CJ_ MCA_009)	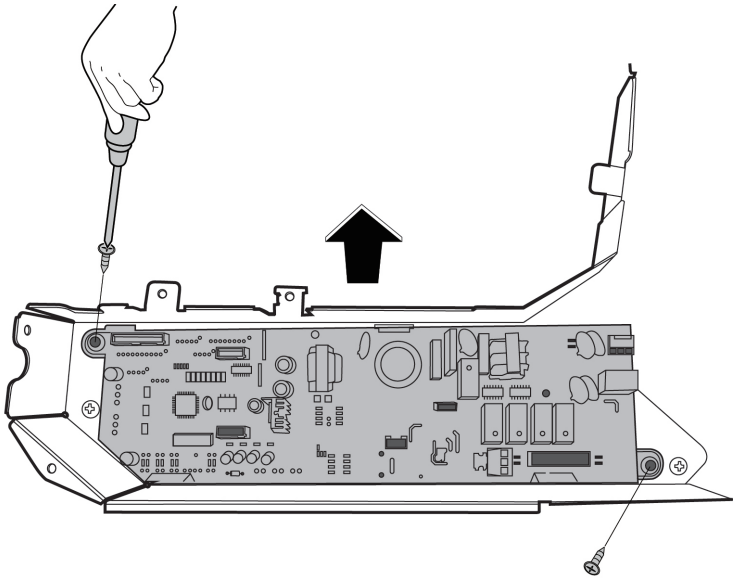 CJ_MCA_009
5) Remove 2 screws of electronic control box and remove electronic control box.(see CJ_MCA_010)	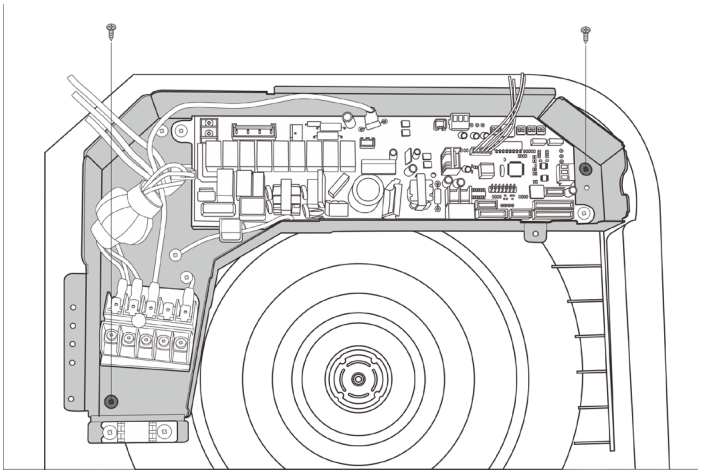 CJ_MCA_010

Note: This section is for reference only. Actual unit appearance may vary.

1.3 Fan motor and fan

Note: Remove the front panel and electrical parts (refer to 1.1 &1.2) before disassembling fan motor.

Procedure	Illustration
1) Remove 4 screws of water collector then remove it.(see CJ_MCA_011)	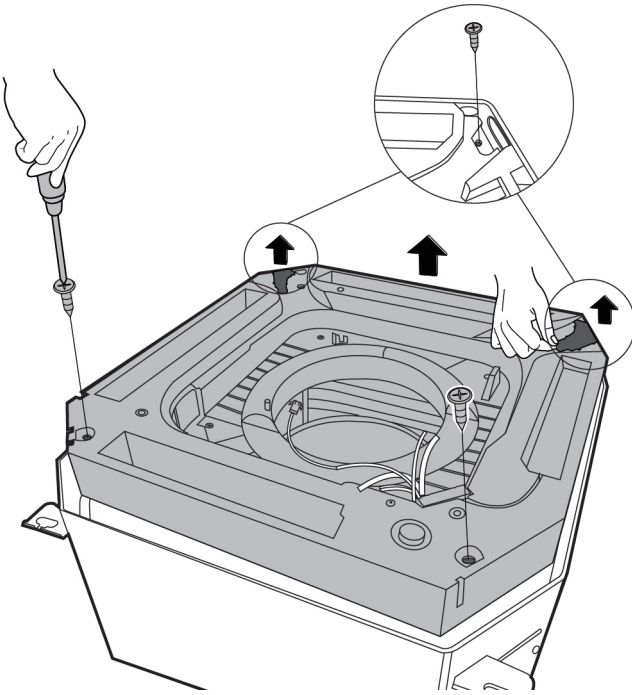 CJ_MCA_011
2) Remove the nut of the fan and then pull up the fan.(see CJ_MCA_012)	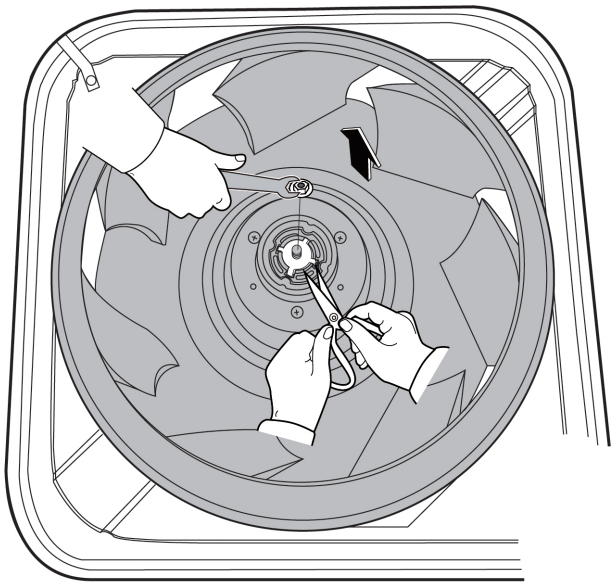 CJ_MCA_012

Note: This section is for reference only. Actual unit appearance may vary.

Procedure	Illustration
3) Remove the nuts and remove the fan motor(see CJ_MCA_013)	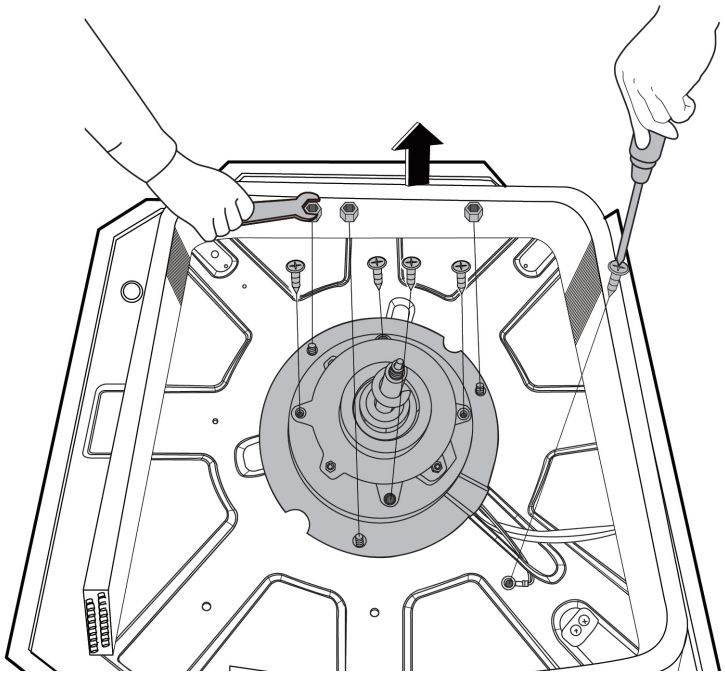 CJ_MCA_013

Note: This section is for reference only. Actual unit appearance may vary.

1.4 Water Pump

Note: Remove the front panel, electrical parts and water collector (refer to 1.1,1.2 &1.3) before disassembling water pump.

Procedure	Illustration
1) Take off the fasten belt of the water pump. (see CJ_MCA_014)	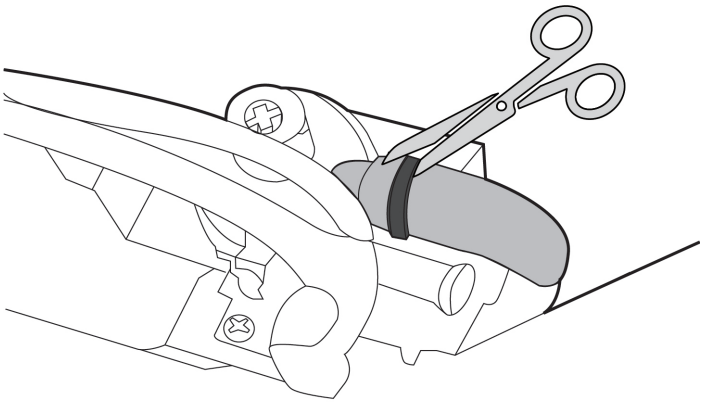 CJ_MCA_014
2) Pinch the metal wire in the direction shown in the figure to release it. (see CJ_MCA_015)	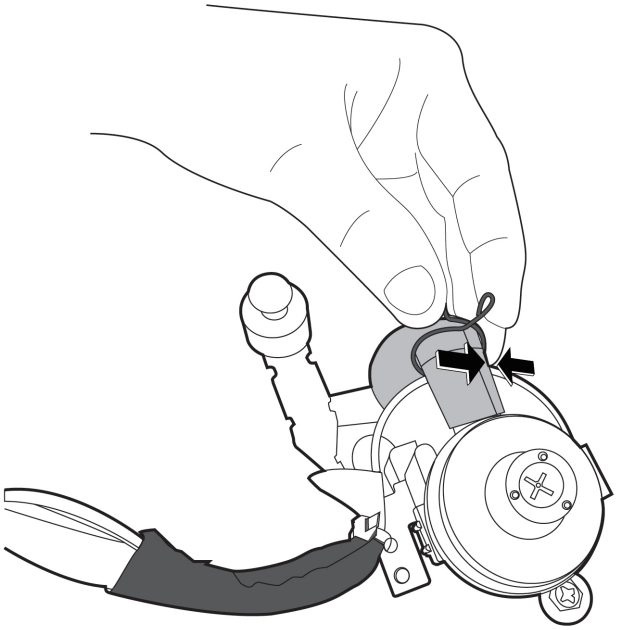 CJ_MCA_015

Note: This section is for reference only. Actual unit appearance may vary.

Procedure	Illustration
3) Remove 3 screws and then remove the water pump. (see CJ_MCA_016)	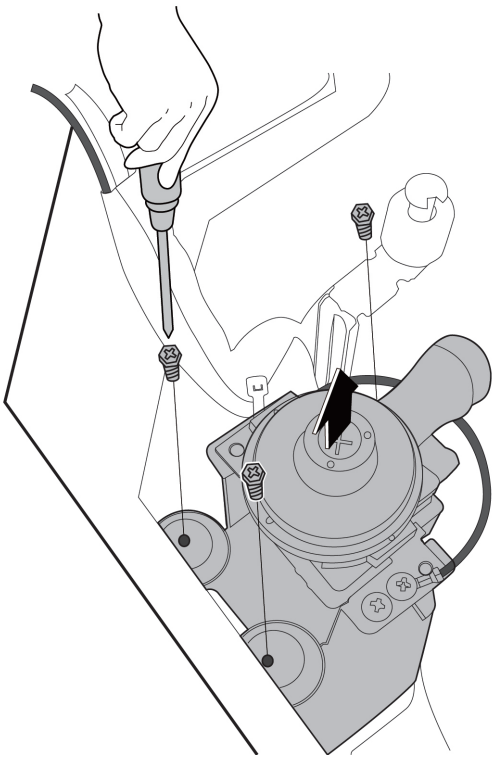 CJ_MCA_016

Note: This section is for reference only. Actual unit appearance may vary.

1.5 Evaporator

Note: Remove the front panel, electrical parts and fan(refer to 1.1,1.2 &1.3) before disassembling evaporator.

Procedure	Illustration
1) Remove 3 screws of pipe clamp board assembly then remove it.(see CJ_MCA_017)	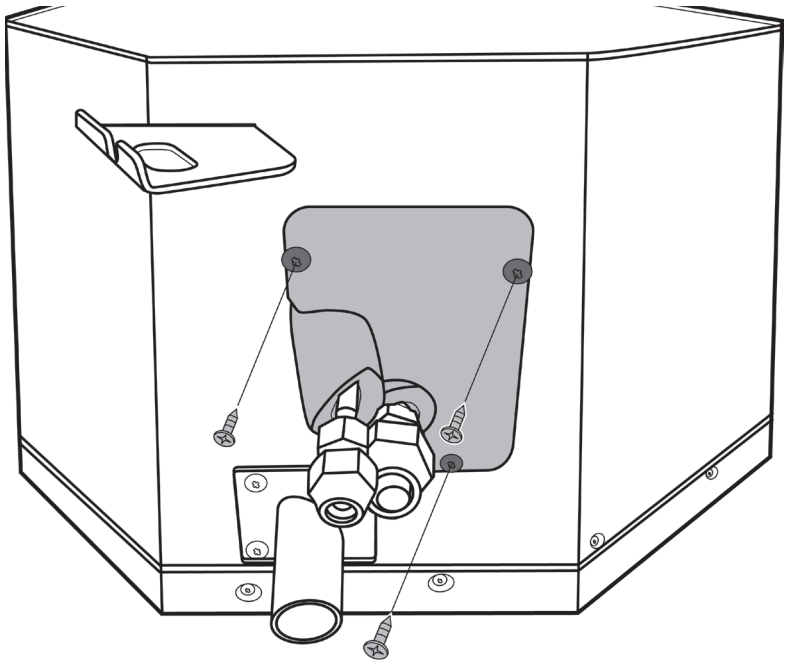 CJ_MCA_017
2) Remove 4 screws of evaporator fixing board then remove it.(see CJ_MCA_018)	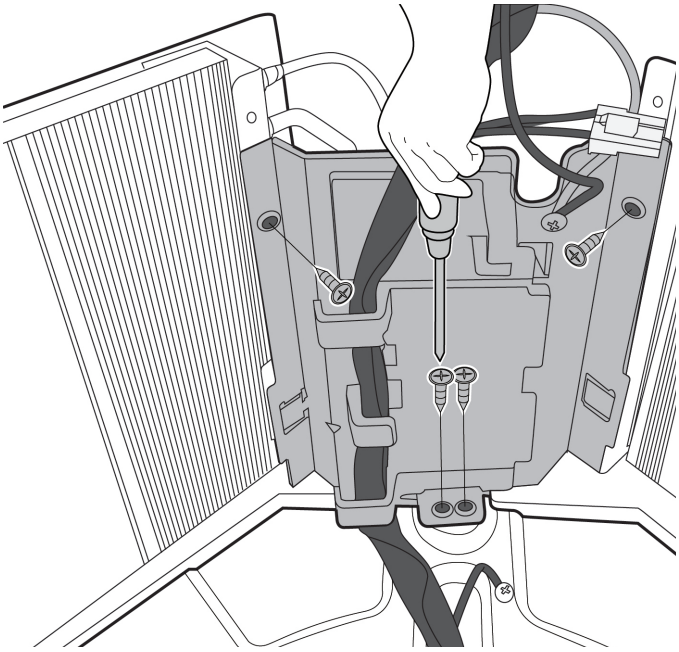 CJ_MCA_018

Note: This section is for reference only. Actual unit appearance may vary.

Procedure	Illustration
3) Remove 1 screw of evaporator fixing hook and remove it. (see CJ_MCA_019)	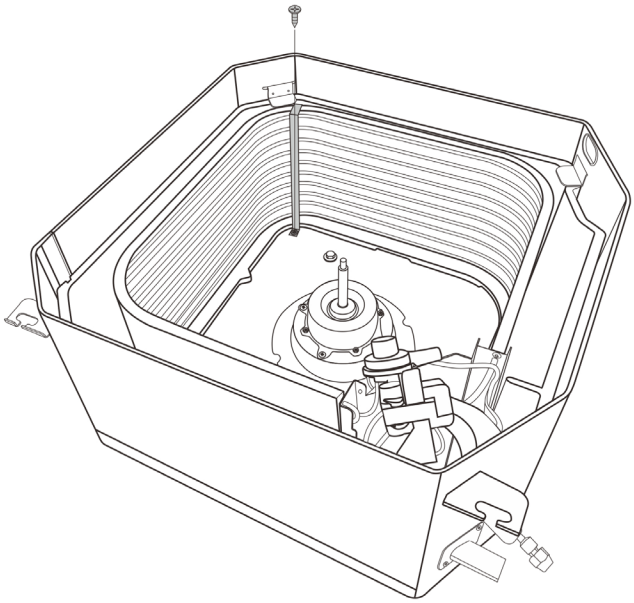 CJ_MCA_019

Note: This section is for reference only. Actual unit appearance may vary.

Indoor Unit Disassembly-Super-slim Cassette

Contents

1. Indoor Unit Disassembly 1

1.1 Front Panel 2

1.2 Electrical Parts 5

1.3 Display Board 6

1.4 Water Pump 8

1.5 Water Collector & Water Level Switch 9

1.6 Fan Motor and Fan 11

1.7 Evaporator 12

1. Indoor Unit Disassembly

1.1 Front Panel

Procedure	Illustration
1) Push one side of the grille clamp. (see CJ_MCD1_001)	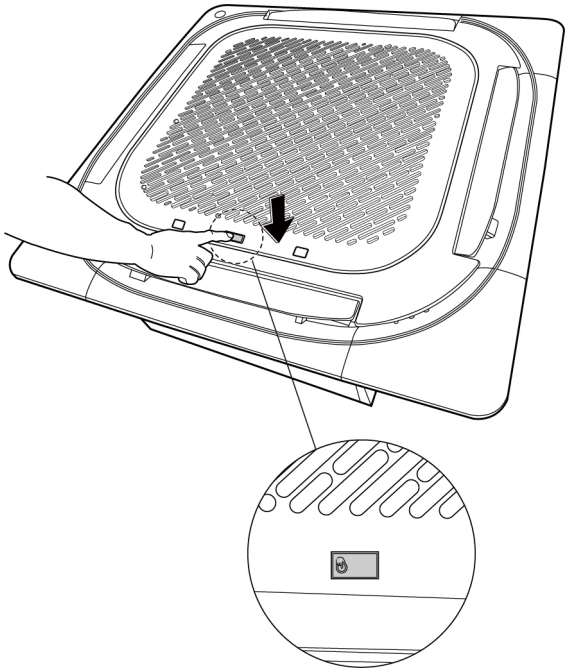 CJ_MCD1_001
2) Remove one screw then push two grille clamps to remove the air inlet grille assembly.(see CJ_MCD1_002)	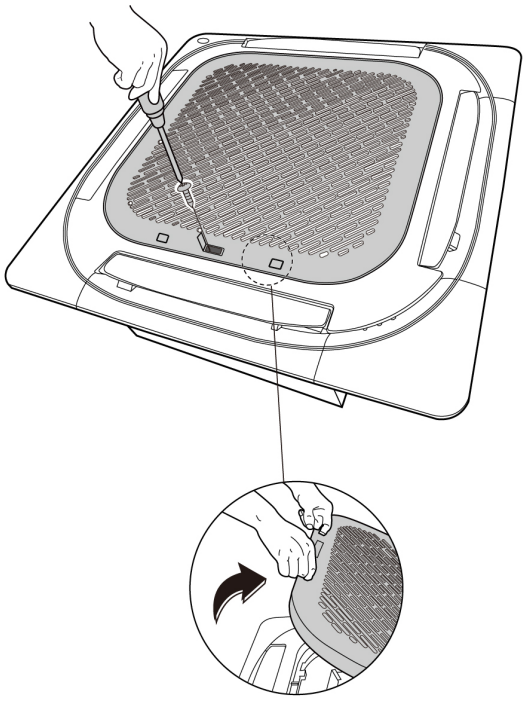 CJ_MCD1_002

Note: This section is for reference only. Actual unit appearance may vary.

Procedure	Illustration
3) Turn over the air inlet grille assembly then pull up the filter. (see CJ_ MCD1_003)	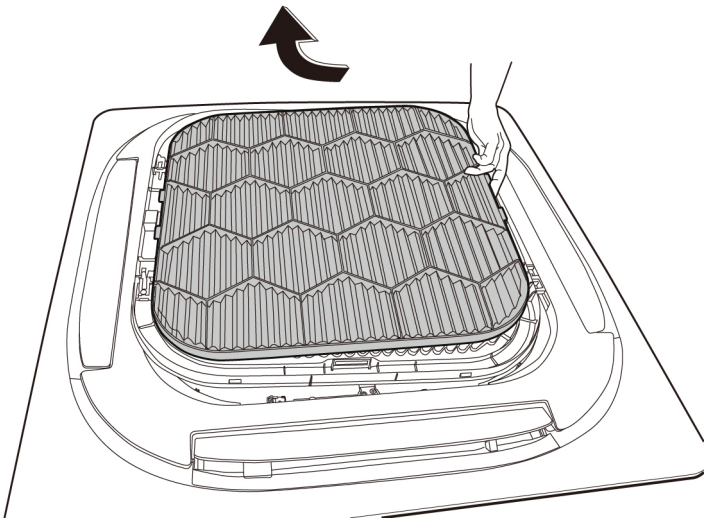 CJ_MCD1_003
4) Remove 2 screws and remove the cover of electronic control box. (see CJ_MCD1_004)	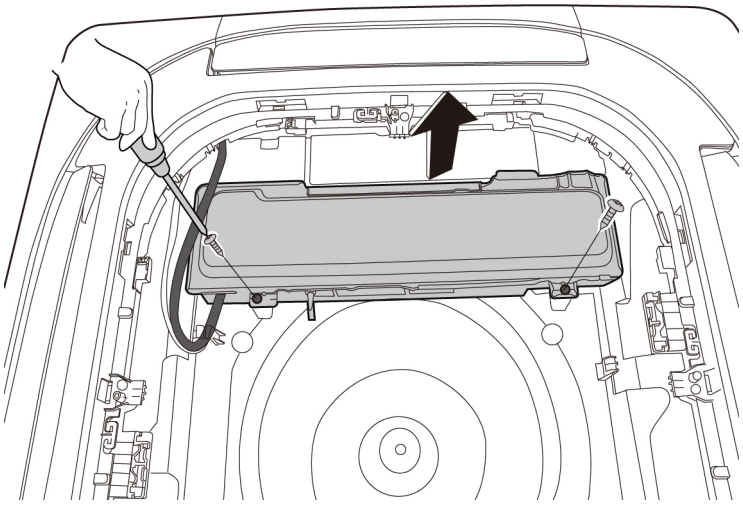 CJ_MCD1_004

Note: This section is for reference only. Actual unit appearance may vary.

Procedure	Illustration
5) Disconnect the connectors of display board and stepper motor and release the panel. (see CJ_MCD1_005)	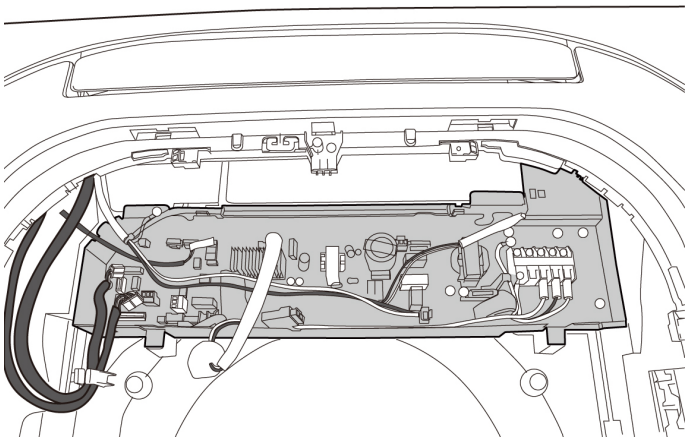 CJ_MCD1_005

Note: This section is for reference only. Actual unit appearance may vary.

1.2 Electrical Parts (Antistatic gloves must be worn.)

Procedure	Illustration
1) Remove 3 screws of electronic control box and 1 screw of earth wire.(see CJ_MCD1_006) 2) Disconnect the connectors of temperature sensor, pump, motor and water level switch. (see CJ_ MCD1_006) 3) Remove the electronic control box subassembly. (see CJ_MCD1_006)	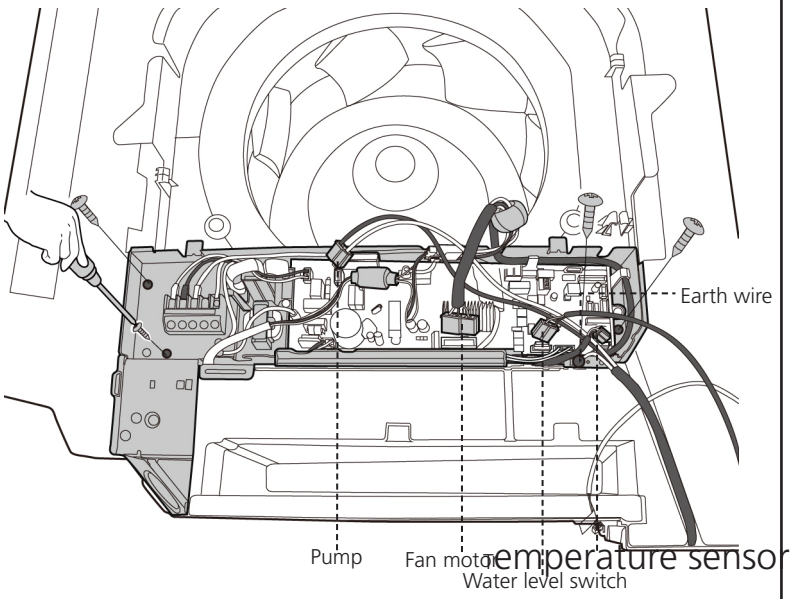 **CJ_MCD1_006**
4) Remove 2 screws of the main control board and 2 screws of earth wire. (see CJ_MCD1_007) 5) Disconnect connectors and then remove the main control board. (see CJ_MCD1_007)	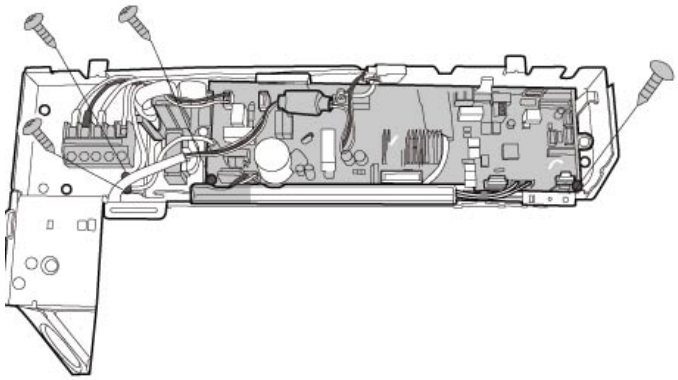 **CJ_MCD1_007**

Note: This section is for reference only. Actual unit appearance may vary.

1.3 Display Board

Procedure	Illustration
1) Open the install cover assembly(with display board) (see CJ_MCD1_008)	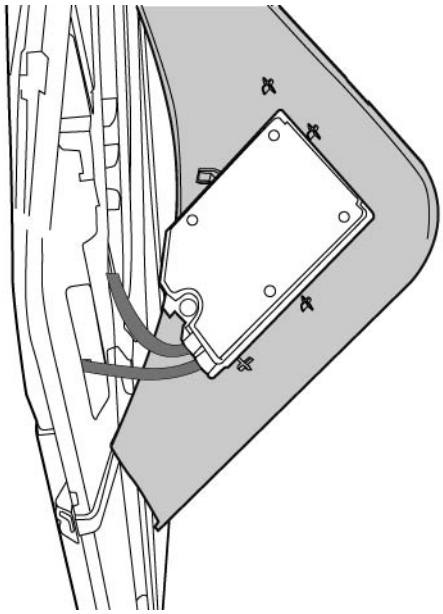 CJ_MCD1_008
2) Remove 1 screw of display window board. (see CJ_MCD1_009)	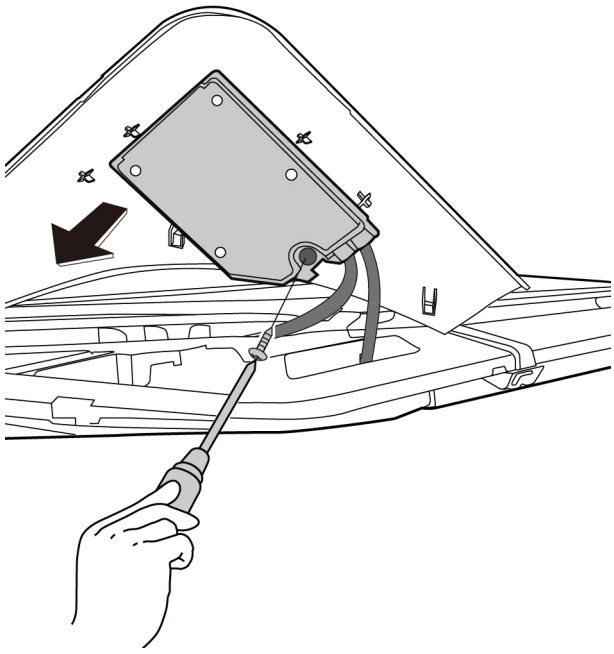 CJ_MCD1_009

Note: This section is for reference only. Actual unit appearance may vary.

Procedure	Illustration
3) Turn over the display board, push the swtich to remove the display board. (see CJ_MCD1_010)	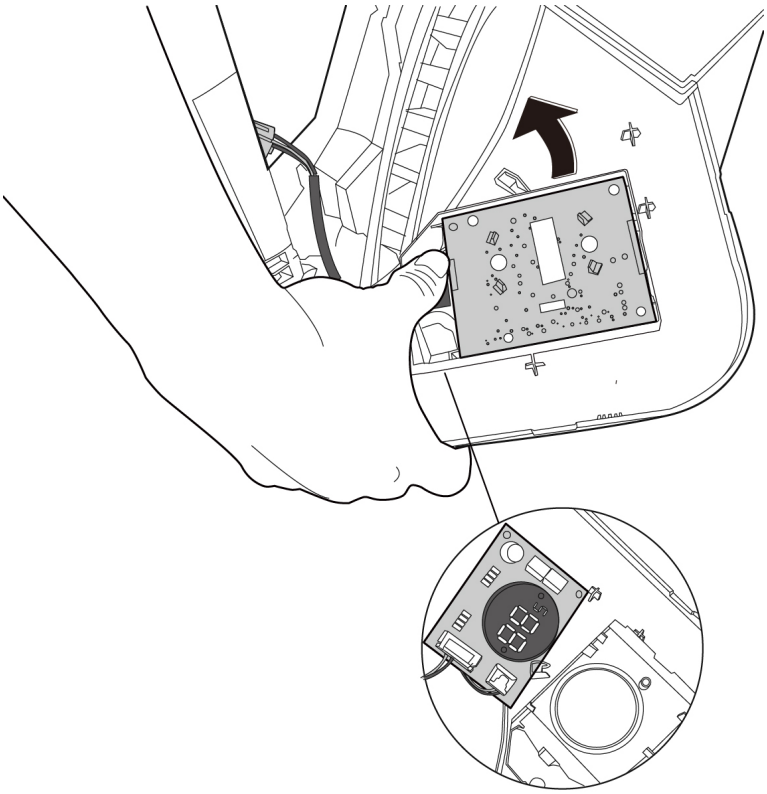 CJ_MCD1_010

Note: This section is for reference only. Actual unit appearance may vary.

1.4 Water Pump

Procedure	Illustration
1) Remove 5 screws fixing external water pump box assembly.(see CJ_MCD1_011)	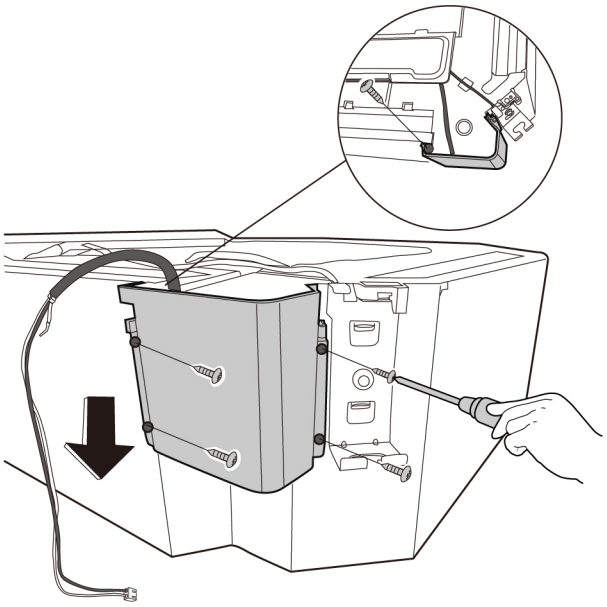 CJ_MCD1_011
2) Remove the water pump box assembly. (see CJ_MCD1_012)	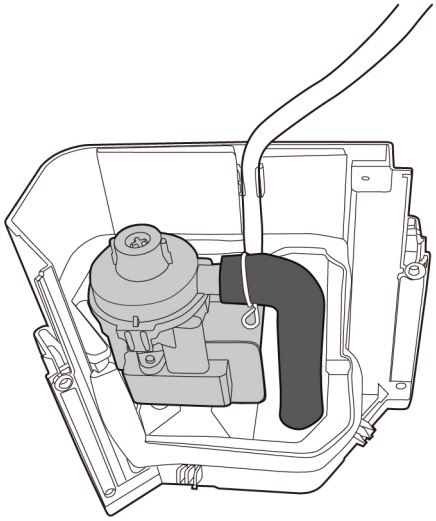 CJ_MCD1_012

Note: This section is for reference only. Actual unit appearance may vary.

1.5 Water Collector and Water Level Switch

Procedure	Illustration
1) Remove the 2 screws of the ventilation ring. (see CJ_MCD1_013)	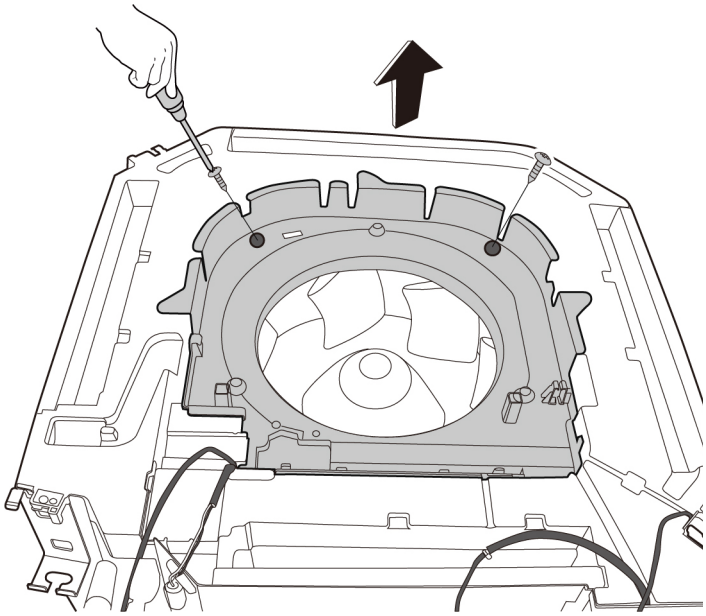 CJ_MCD1_013
2) Remove the 2 screws fixing the water collector. (see CJ_MCD1_014)	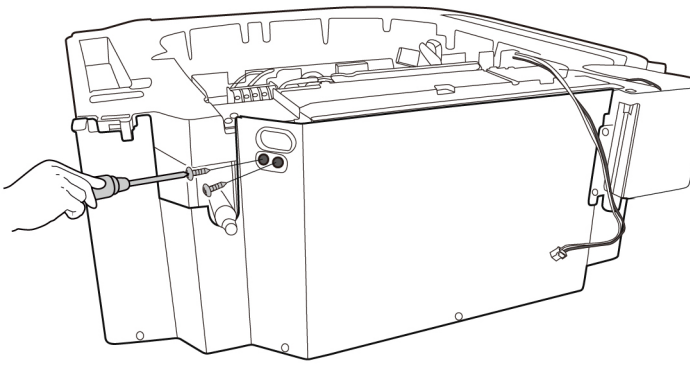 CJ_MCD1_014

Note: This section is for reference only. Actual unit appearance may vary.

Procedure	Illustration
3) Remove the 5 screws of the water collector subassembly. (see CJ_MCD1_015)	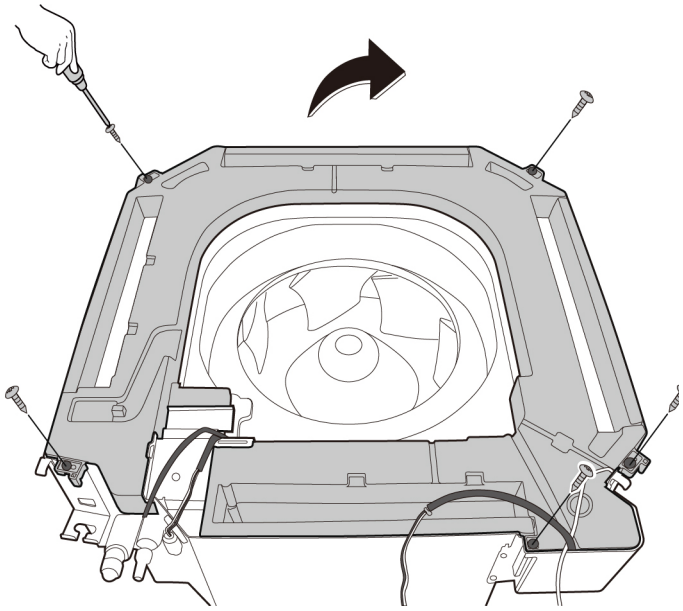 CJ_MCD1_015
4) Turn over the water collector subassembly and remove the water level switch. (see CJ_MCD1_016)	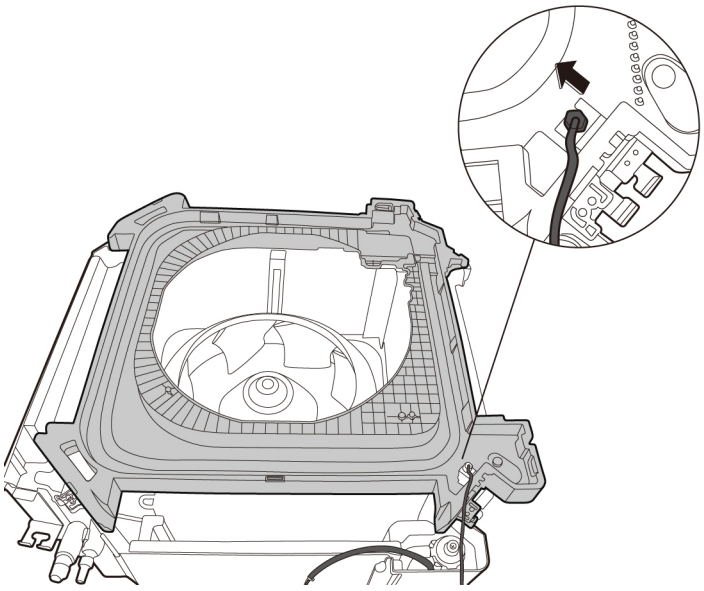 CJ_MCD1_016

Note: This section is for reference only. Actual unit appearance may vary.

1.6 Fan Motor and Fan

Procedure	Illustration
1) Remove the nut of the fan and then pull up the fan. (see CJ_MCD1_017)	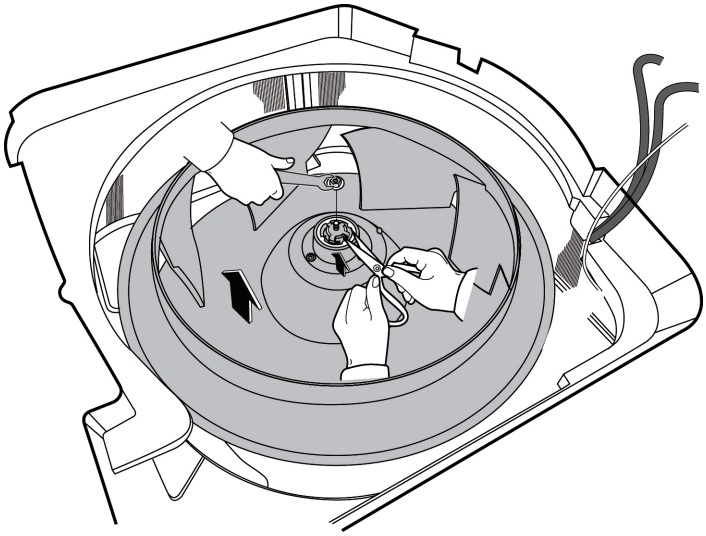 CJ_MCD1_017
2) Remove 2 screws of fixing board and 3 nuts of fan motor. (see CJ_MCD1_018)	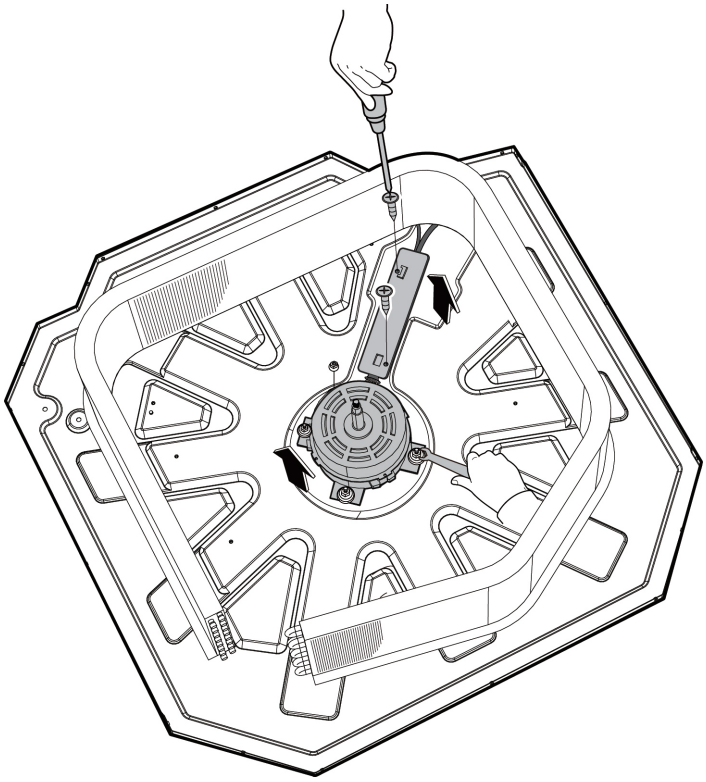 CJ_MCD1_018

Note: This section is for reference only. Actual unit appearance may vary.

1.7 Evaporator

Procedure	Illustration
1) Remove 2 screws of pipe clamp board. (see CJ_MCD1_019)	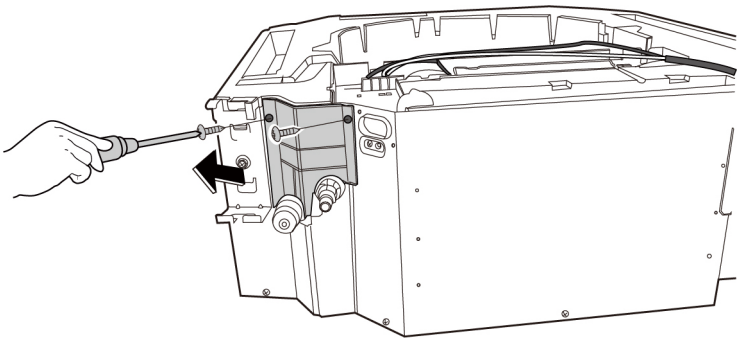 CJ_MCD1_019
2) Remove 4 screws of the evaporator fixing bracket and then remove it. (see CJ_MCD1_020)	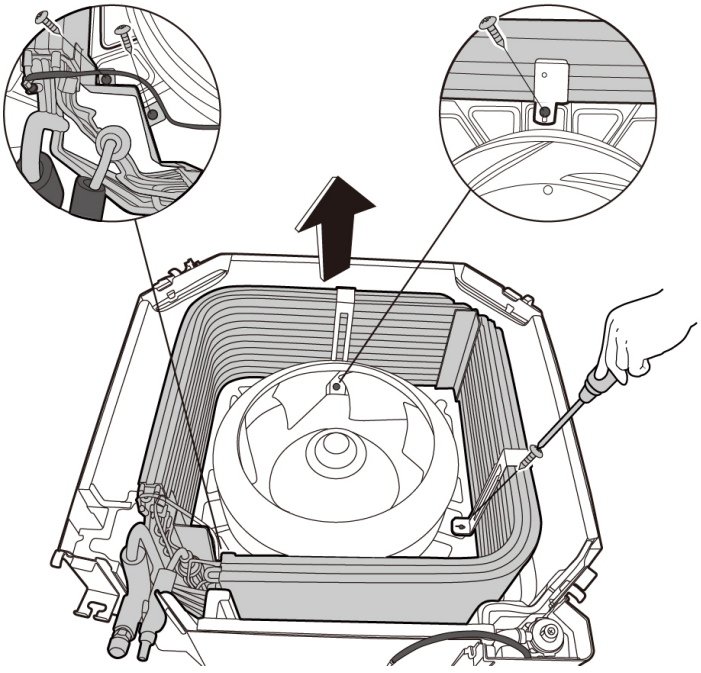 CJ_MCD1_020

Note: This section is for reference only. Actual unit appearance may vary.

Indoor Unit Disassembly -A6 DUCT

Contents

1. Indoor Unit Disassembly 1

1.1 Electrical Parts 2

1.2 Fan Motor and Fan 5

1.3 Evaporator 7

1. Indoor Unit Disassembly

1.1 Electrical Parts (Antistatic gloves must be worn.)

Procedure	Illustration
1) Remove 5 screws of the cover of electronic control box and then remove the cover. (see CJ_A6_001)	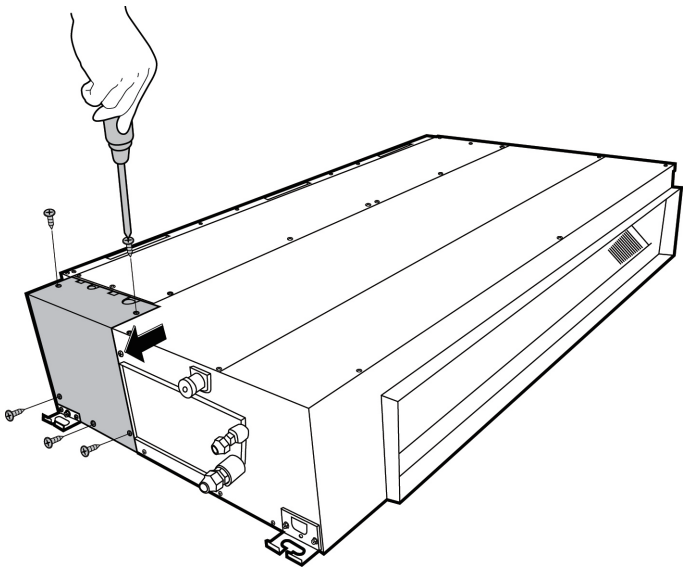 CJ_A6_001
2) Remove 2 screws of the electronic control box. Then release 2 hooks of the main control board. (see CJ_A6_002)	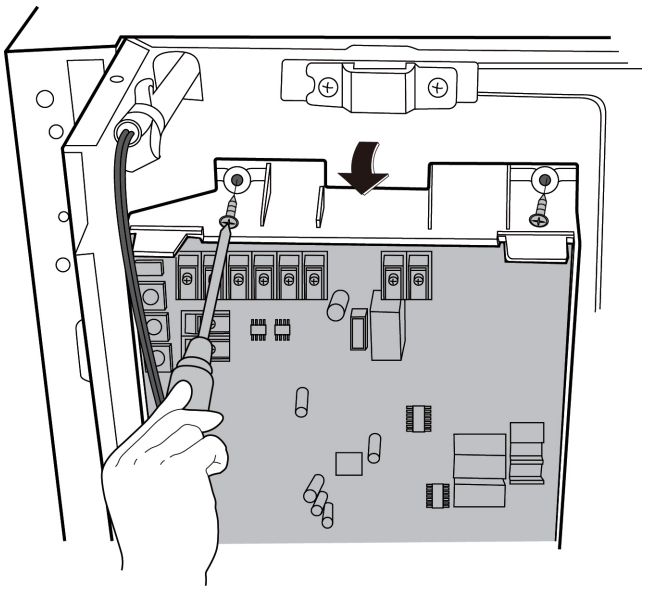 CJ_A6_002

Note: This section is for reference only. Actual unit appearance may vary.

Procedure	Illustration
3) Disconnect the connectors and then remove the front main control board. (see CJ_A6_003)	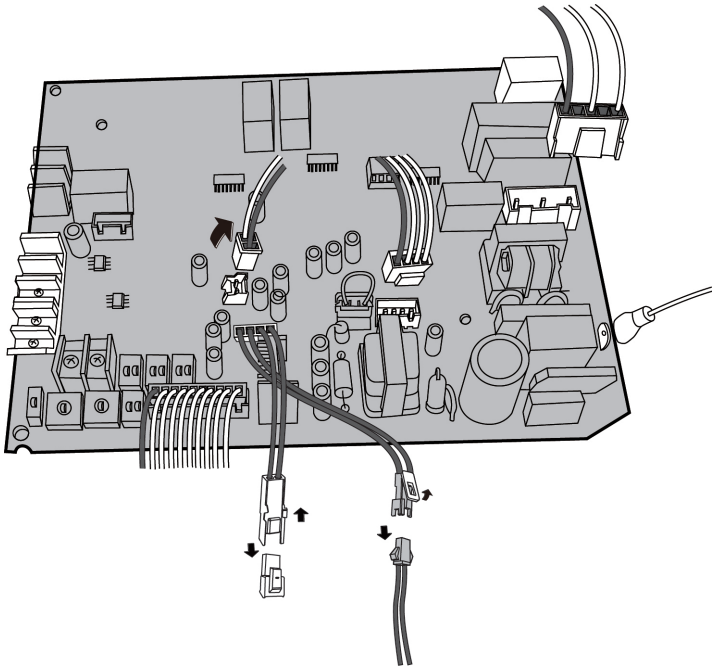 CJ_A6_003
4) Turn over the electronic control box. Disconnect the connectors and remove 2 screws of rear main control board. (see CJ_A6_004)	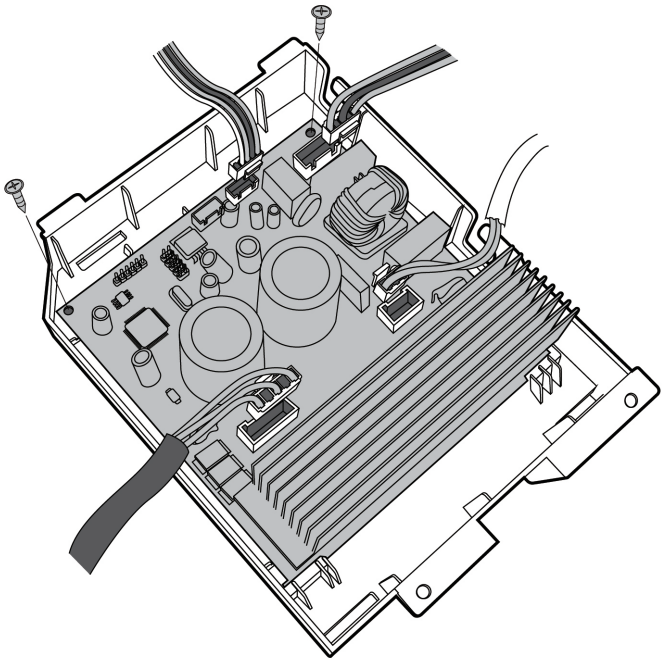 CJ_A6_004

Note: This section is for reference only. Actual unit appearance may vary.

Procedure	Illustration
5) Remove 2 screws of reactor and remove the reactor. (see CJ_A6_005)	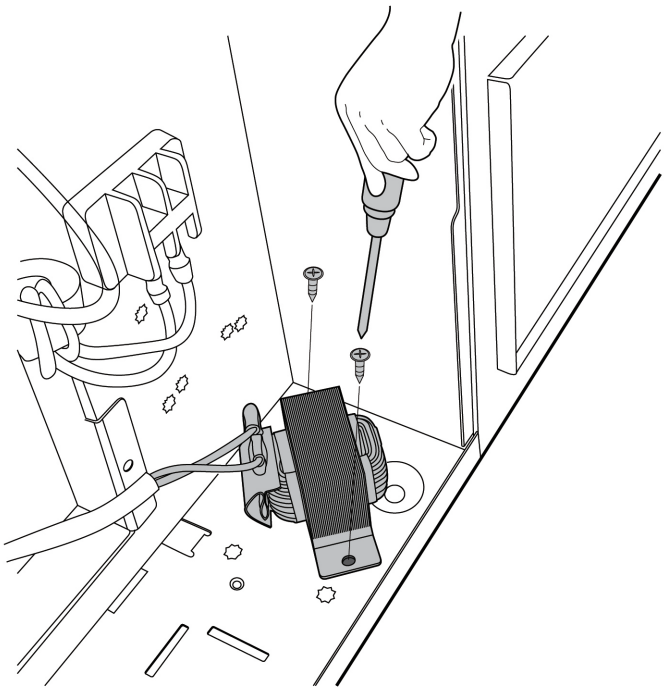 CJ_A6_005

Note: This section is for reference only. Actual unit appearance may vary.

1.2 Fan motor and fan

Procedure	Illustration
1) Remove 10 screws of the top cover and then remove the top cover. (see CJ_A6_006)	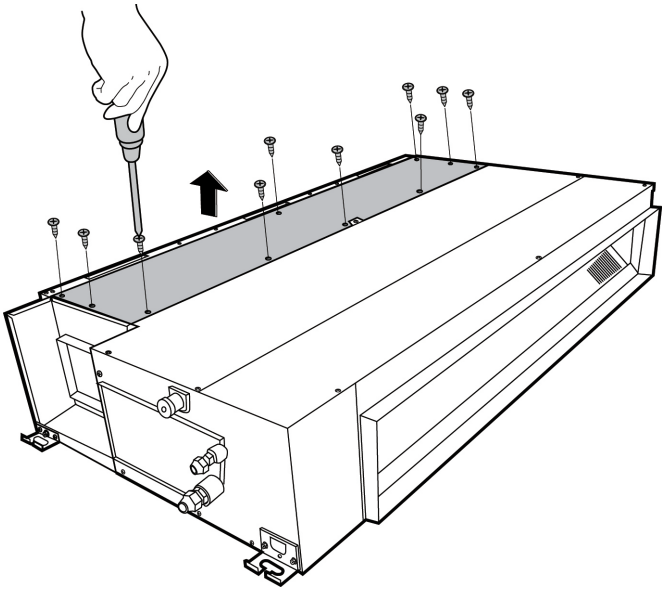 CJ_A6_006
2) Release 3 hooks of volute shell. (see CJ_A6_007)	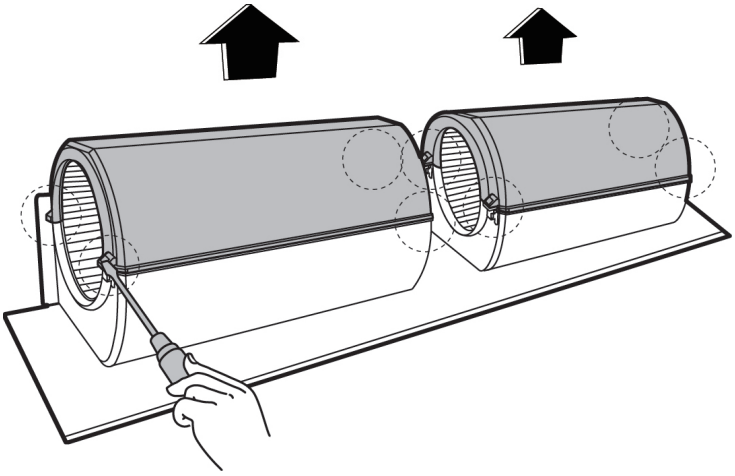 CJ_A6_007

Note: This section is for reference only. Actual unit appearance may vary.

Procedure	Illustration
3) Remove the fiing screws of fan (2 screws). (see CJ_A6_008)	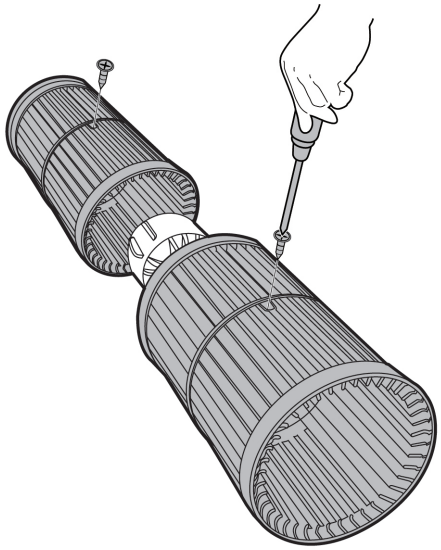 CJ_A6_008

Note: This section is for reference only. Actual unit appearance may vary.

1.3 Evaporator

Procedure	Illustration
1) Remove 9 Screws of the water collecter and remove the water collecter. (see CJ_A6_009)	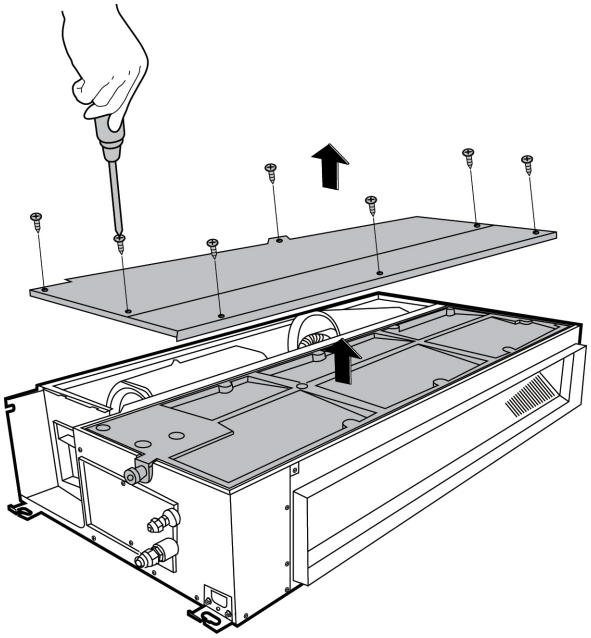 CJ_A6_009
2) Remove the screws of the pipe clamp board and the left side board (3 for the pipe clamp and 9 for left side board). (see CJ_A6_010)	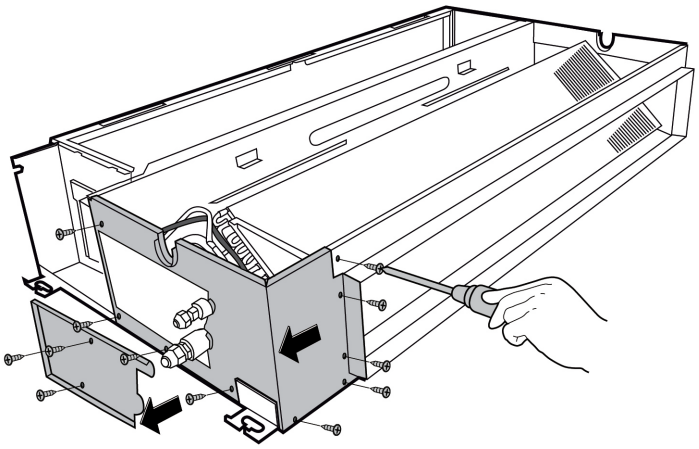 CJ_A6_010

Note: Remove the front panel (refer to 1. Front panel) before disassembling electrical parts.

Procedure	Illustration
3) Remove 2 screws of the evaporator support and then pull up the temperature sensor. (see CJ_A6_011)	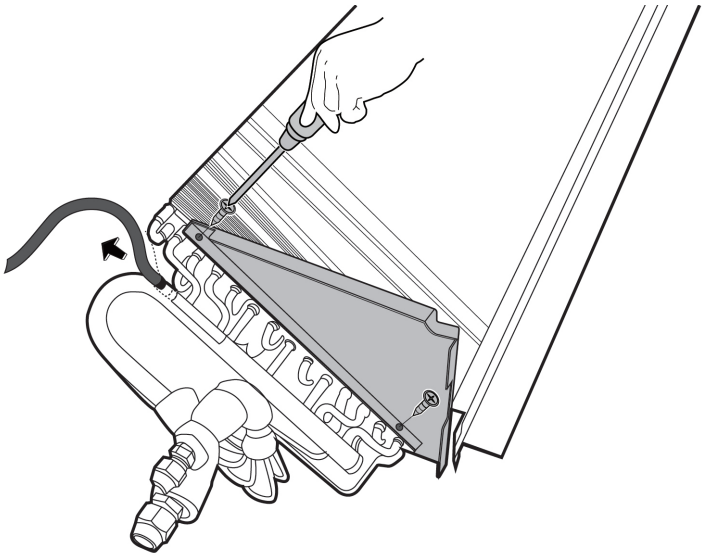 CJ_A6_011
4) Remove the screw of the evaporator and then remove it. (see CJ_A6_012)	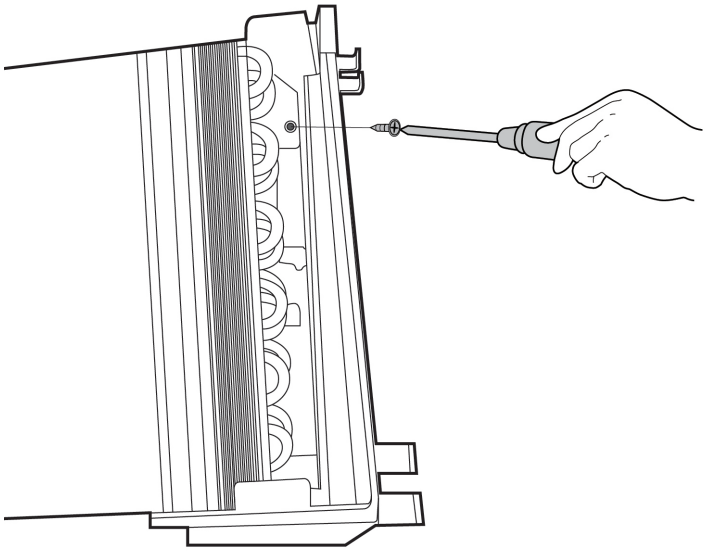 CJ_A6_012

Note: This section is for reference only. Actual unit appearance may vary.

Indoor Unit Disassembly-Floor Ceiling

Contents

1. Indoor Unit Disassembly 1

1.1 Front Panel 2

1.2 Electrical Parts 3

1.3 Fan Motor and Fan 4

1.4 Evaporator 7

1.5 Display Board 11

1. Indoor Unit Disassembly

1.1 Front Panel

Procedure	Illustration
1) Remove 2 screws of return air grille subassembly and release 2 hooks. (see CJ_FC_001)	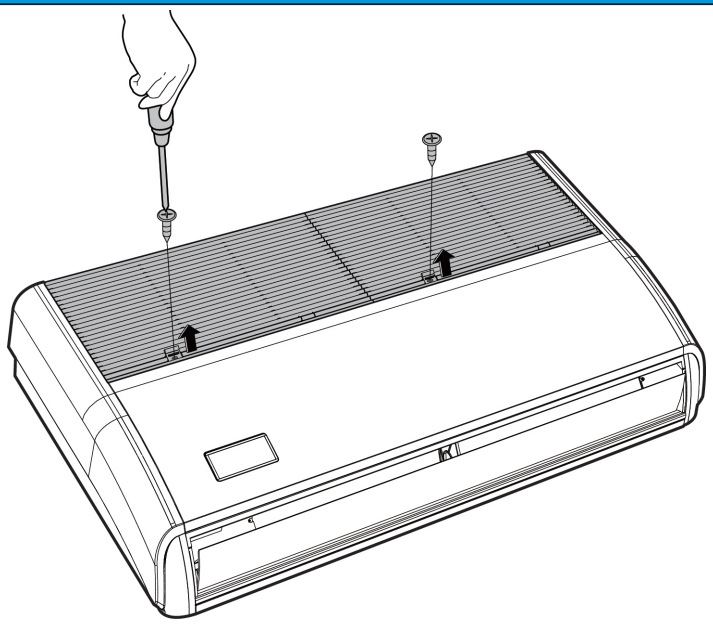 CJ_FC_001
2) Release 2 hooks for each filter, and then pull up the filter. (see CJ_FC_002)	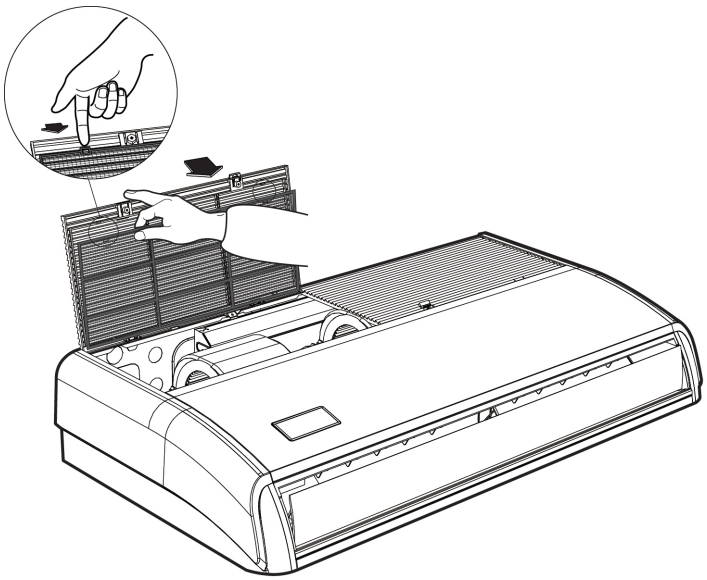 CJ_FC_002

Note: This section is for reference only. Actual unit appearance may vary.

1.2 Electrical Parts (Antistatic gloves must be worn.)

Note: Remove the front panel (refer to 1.1 front panel) before disassembling electrical part.

Procedure	Illustration
1) Remove 4 screws of the cover of electronic control box and then remove the cover. (see CJ_FC_003)	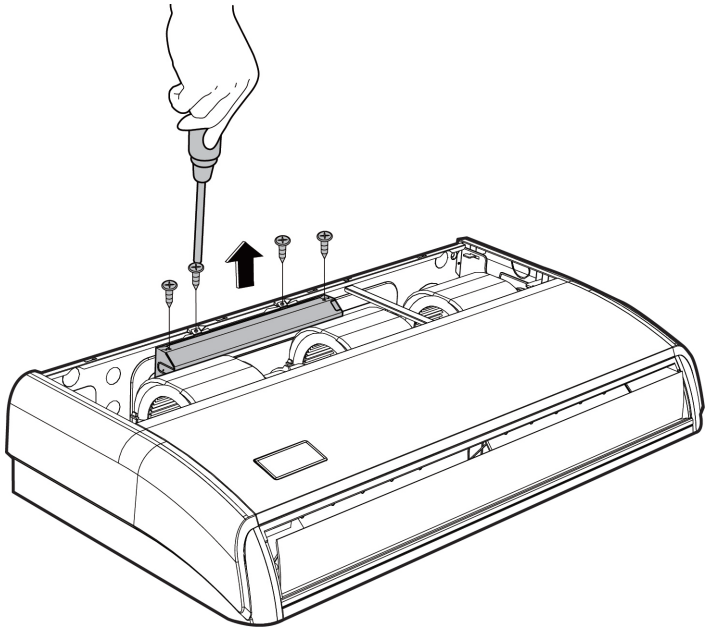 CJ_FC_003
2) Disconnect the connectors and then remove the main control board. (see CJ_FC_004)	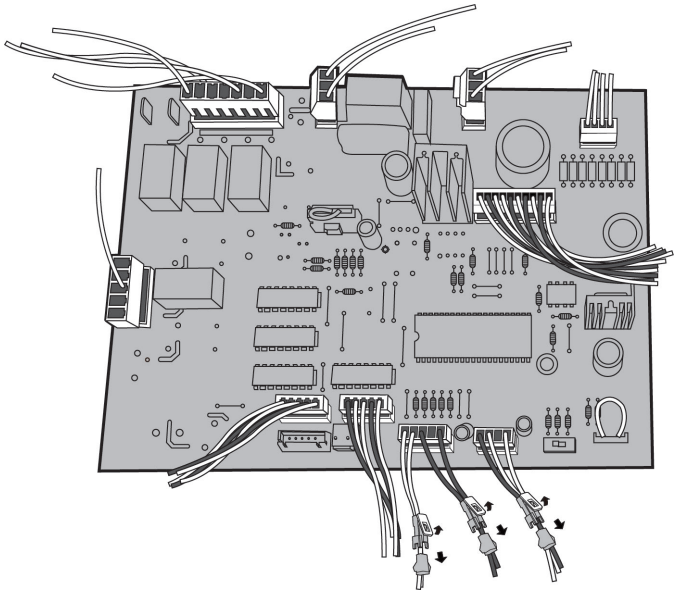 CJ_FC_004

Note: This section is for reference only. Actual unit appearance may vary.

1.3 Fan motor and fan

Note: Remove the front panel (refer to 1.1 front panel) before disassembling fan motor and fan.

Procedure	Illustration
1) Remove the fix screw of supporting board. (see CJ_FC_005)	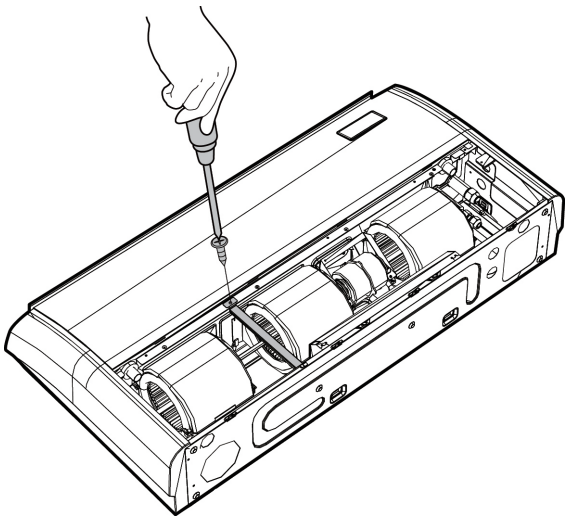 CJ_FC_005
2) Remove the screws of fan motor support and then remove the screw of ground wire. (see CJ_FC_006)	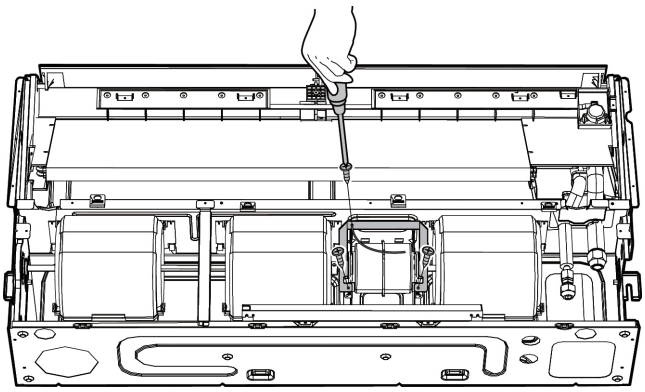 CJ_FC_006

Note: This section is for reference only. Actual unit appearance may vary.

Procedure	Illustration
3) Remove the two screws of the fan motor shaft. (see CJ_FC_007)	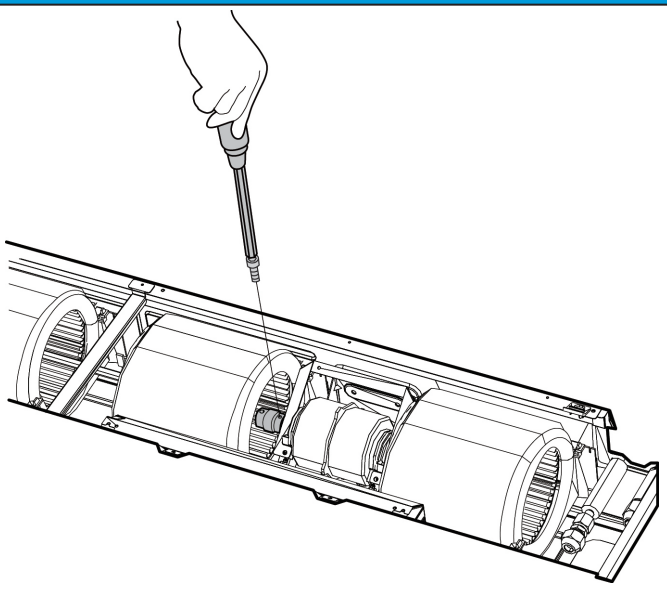 CJ_FC_007
4) Release the hooks of the volute shell and then pull up it. (see CJ_FC_008)	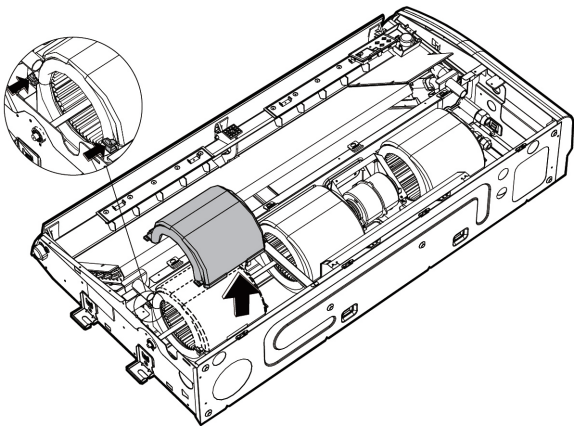 CJ_FC_008

Note: This section is for reference only. Actual unit appearance may vary.

Procedure	Illustration
5) Remove the screws of fan (3 screws). (see CJ_FC_009)	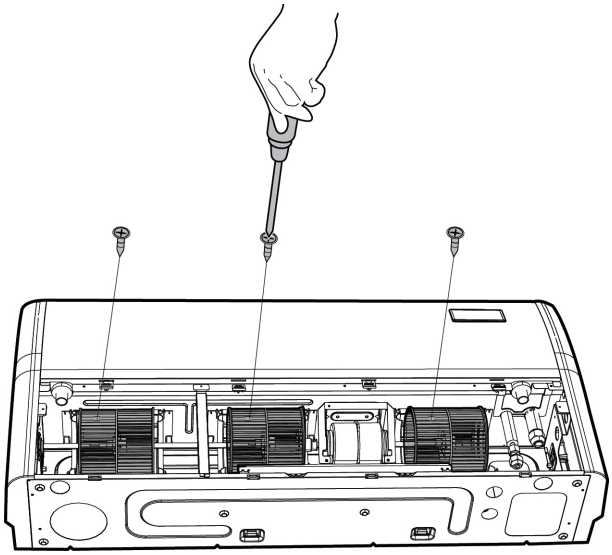 CJ_FC_009

Note: This section is for reference only. Actual unit appearance may vary.

1.4 Evaporator

Note: Remove the front panel (refer to 1.1 front panel) before disassembling evaporator.

Procedure	Illustration
1) Remove the screws of left and right panel and then push it in the direction shown in the figure to move it. (see CJ_FC_010)	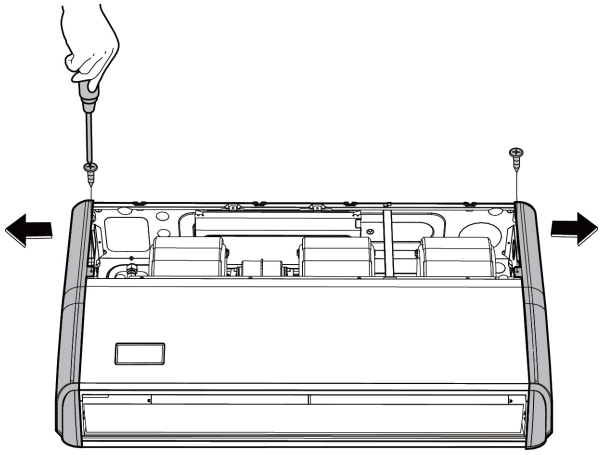 CJ_FC_010
2) Remove the screws of the front panel(9 screws). (see CJ_FC_011)	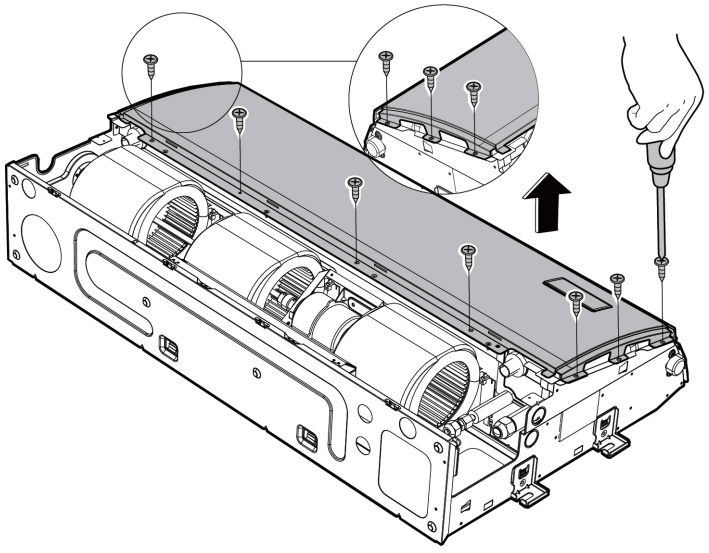 CJ_FC_011

Note: This section is for reference only. Actual unit appearance may vary.

Procedure	Illustration
3) Remove the 1 screw of the water collector. (see CJ_FC_012)	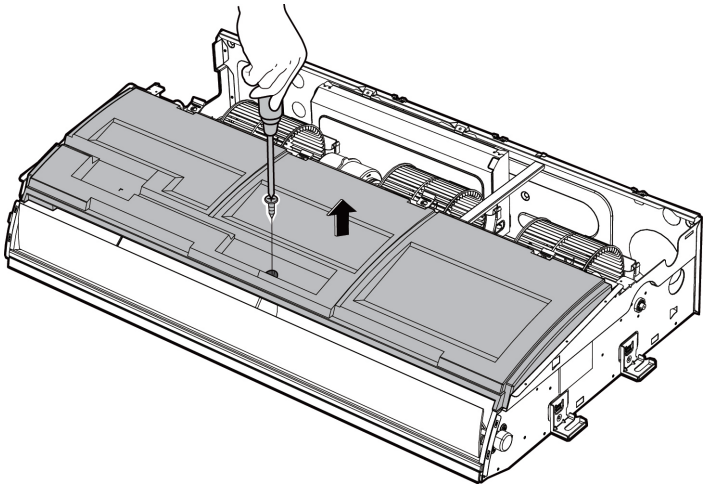 CJ_FC_012
4) Remove 3 screws of board and then remove it. (see CJ_FC_013)	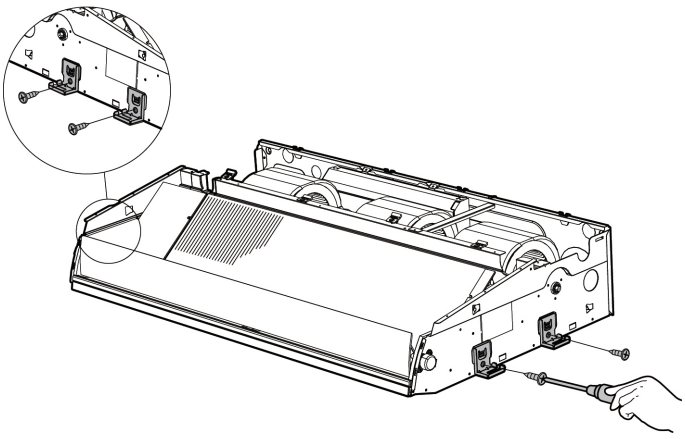 CJ_FC_013

Note: This section is for reference only. Actual unit appearance may vary.

Procedure	Illustration
5) Remove the screws of the pipe clamp board. (see CJ_FC_014)	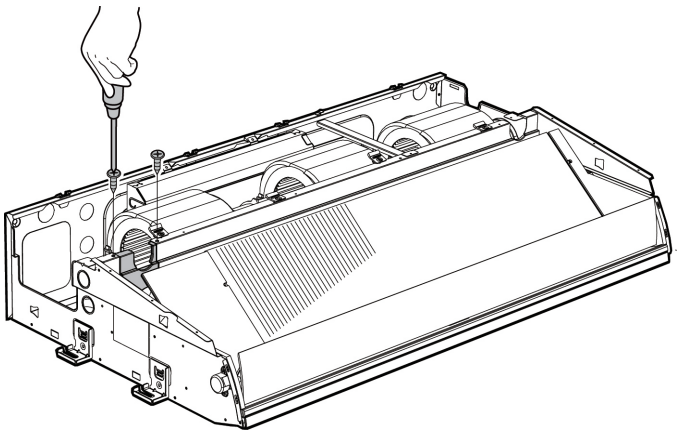 CJ_FC_014
6) Pull up the temperature sensor. (see CJ_FC_015)	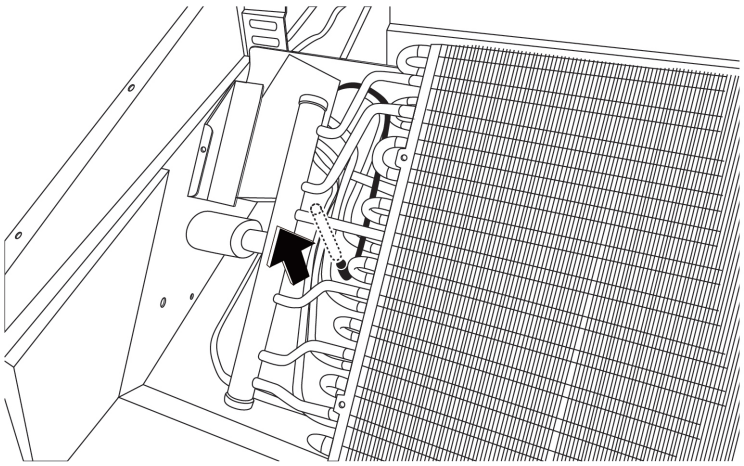 CJ_FC_015

Note: This section is for reference only. Actual unit appearance may vary.

Procedure	Illustration
7) Remove the screws of the front evaporator support. (5 screws) (see CJ_FC_016)	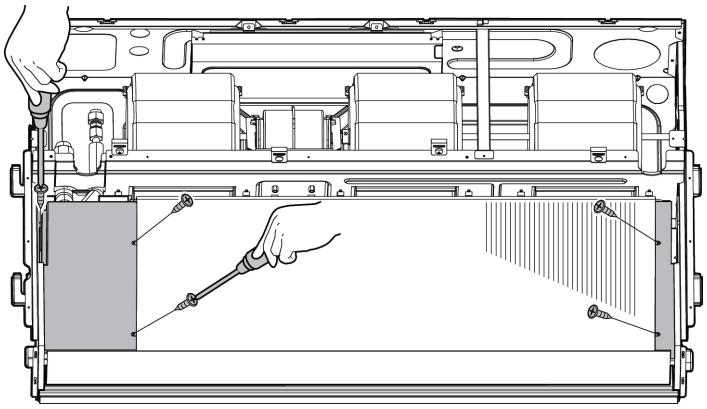 CJ_FC_016
8) Remove the screws of the rear evaporator support then pull out the evaporator. (4 screws) (see CJ_FC_017)	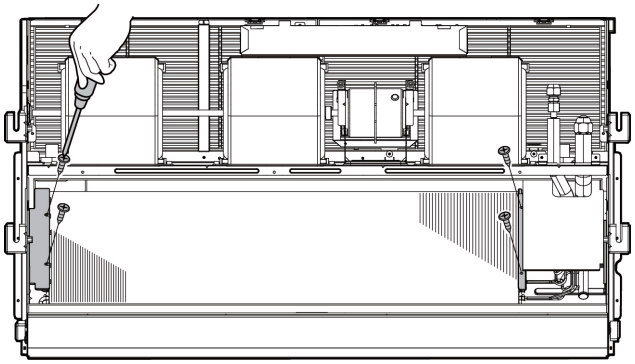 CJ_FC_017
9) Remove 2 screws and Remove step motor. (see CJ_FC_018)	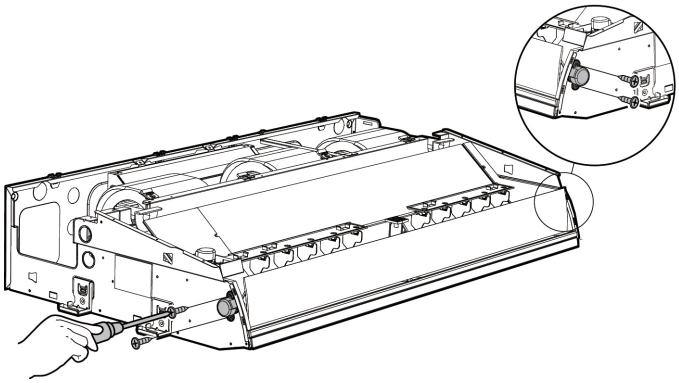 CJ_FC_018

Note: This section is for reference only. Actual unit appearance may vary.

1.5 Display Board

Procedure	Illustration
1) Remove 2 screws of display board and remove the display. (see CJ_FC_019)	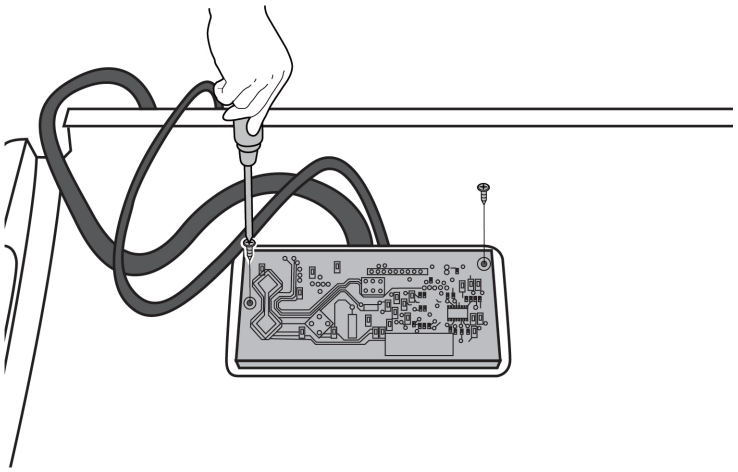 CJ_FC_019

Note: This section is for reference only. Actual unit appearance may vary.

Outdoor Unit Disassembly

Contents

1. Outdoor Unit Table 2

2. Outdoor Unit Disassembly 3

2.1 Panel Plate 3

2.2 Electrical Parts 25

2.3 Fan Assembly 54

2.4 Fan Motor 55

2.5 Sound Blanket 56

2.6 Four-way Valve 57

2.7 Compressor 58

1. Outdoor Unit Disassembly

1.1 Outdoor Unit Table

Outdoor Unit Model	Panel Plate	PCB Board
YDAX-035H-09M25	X230	PCB Board 16
YDAX-050H-09M25	X330	PCB Board 16
YDAX-070H-09M25	X430	PCB Board 6
YDAX-0100H-09M25	D30	PCB Board 13
YDAX-100H-09T35	D30	PCB Board 10
YDAX-140H-09T35	E30	PCB Board 17
YDAX-175H-09T35	E30	PCB Board 17

2. Outdoor Unit Disassembly

2.1 Panel Plate

1. BA30

Procedure	Illustration
1) Turn off the air conditioner and the power breaker. 2) Remove the screws of the big handle and then remove the big handle (1 screws) (see CJ_BA30_001). 3) Remove the screws of the top cover and then remove the top cover (3 screws). One of the screws is located underneath the big handle (see CJ_BA30_002).	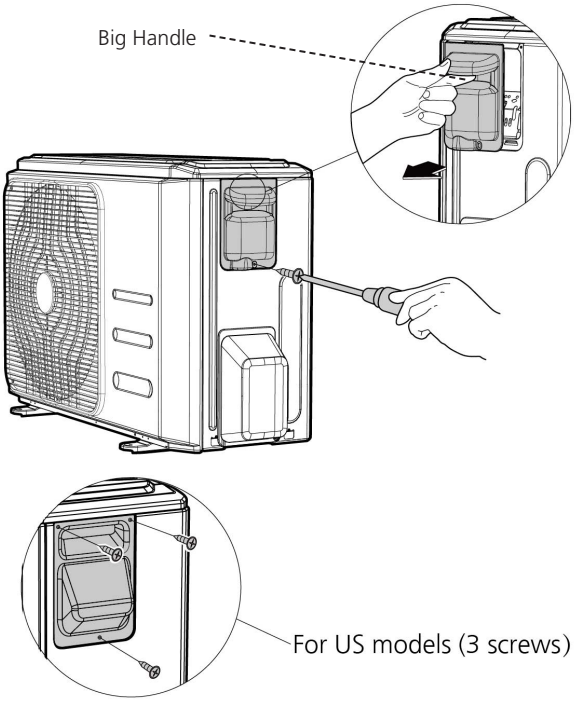 **CJ_BA30_001** 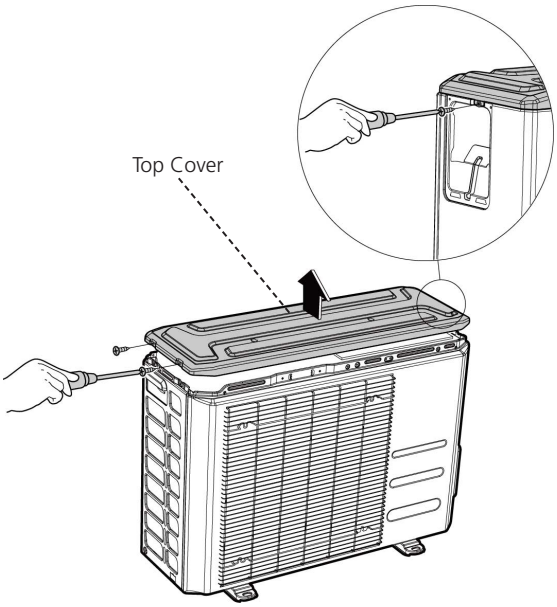 **CJ_BA30_002**

Note: This section is for reference only. Actual unit appearance may vary.

Procedure	Illustration
4) Remove the screws of the front panel and then remove the front panel (7 screws) (see CJ_BA30_003).	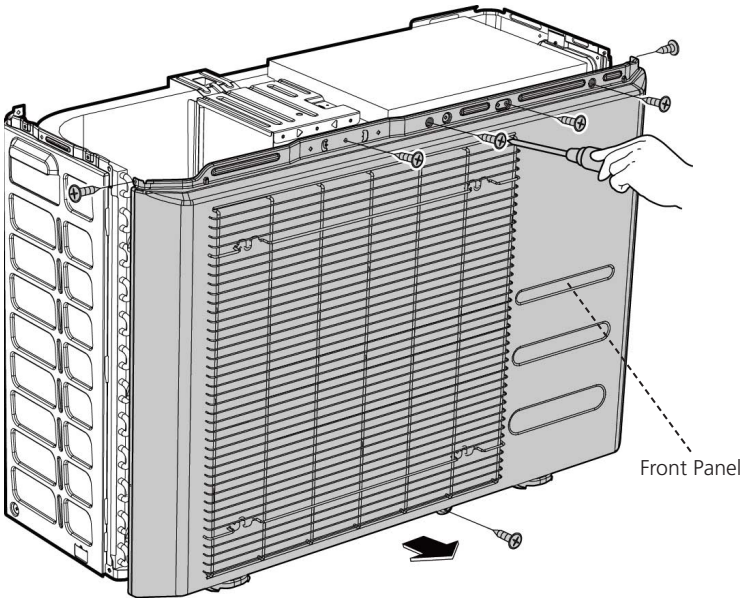 **CJ_BA30_003**
5) Remove the screws of water collecting cover (2 screws) (see CJ_BA30_004).	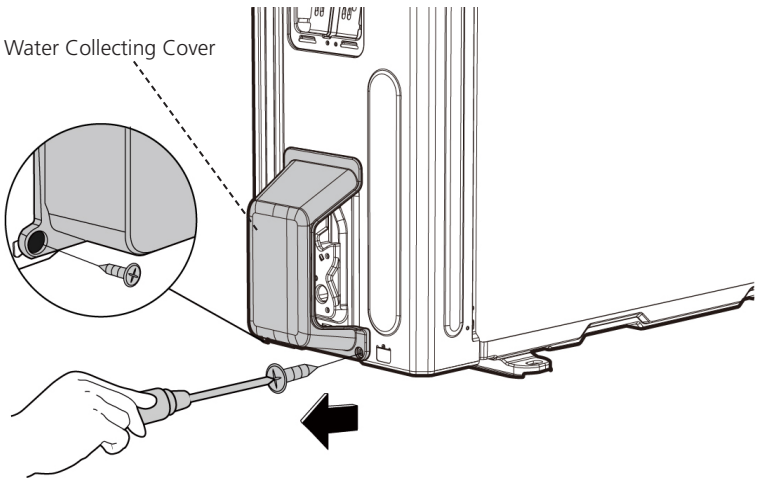 **CJ_BA30_004**

Note: This section is for reference only. Actual unit appearance may vary.

Procedure	Illustration
6) Remove the screws of the rear net and then remove the rear net (2 screws) (see CJ_BA30_005). (for some models)	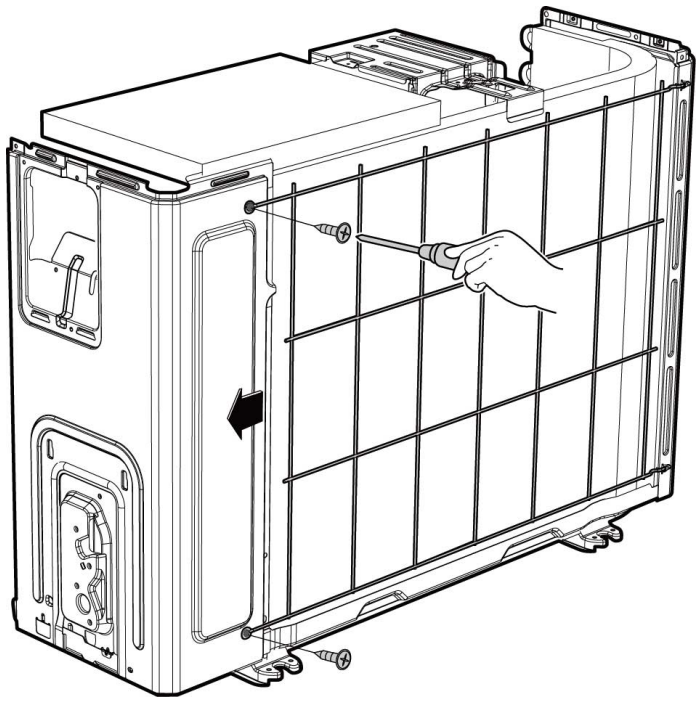 CJ_BA30_005
7) Remove the screws of the right panel and then remove the right panel (6 screws) (see CJ_BA30_006).	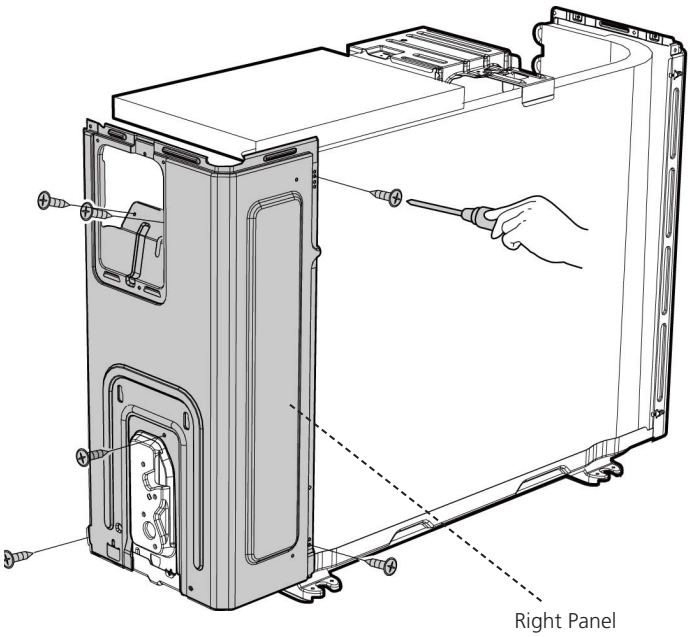 CJ_BA30_006

Note: This section is for reference only. Actual unit appearance may vary.

2. B30

Procedure	Illustration
1) Turn off the air conditioner and the power breaker. 2) Remove the screws of the big handle and then remove the big handle (1 screws) (see CJ_B30_001).	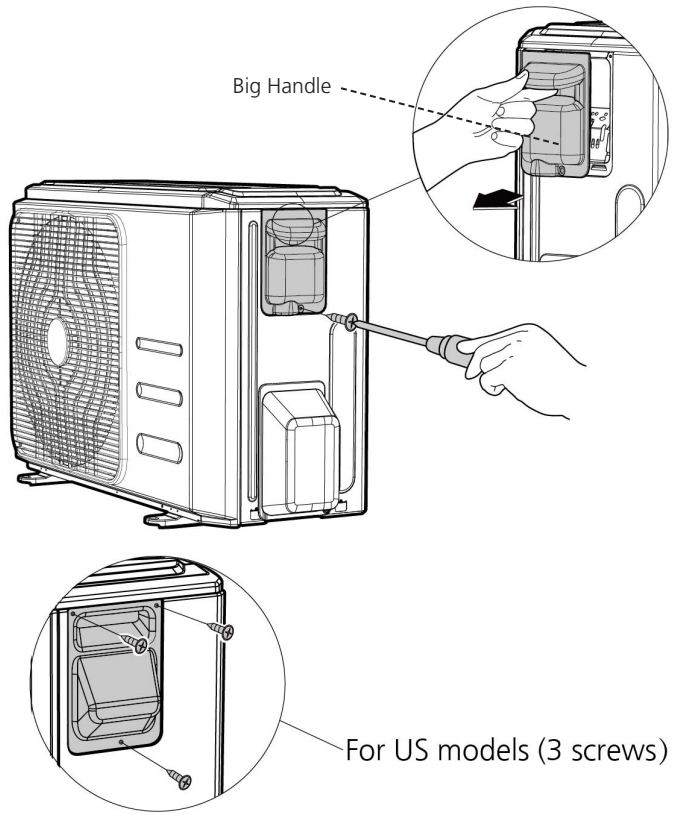 **CJ_B30_001**
3) Remove the screws of the top cover and then remove the top cover (3 screws). One of the screws is located underneath the big handle (see CJ_B30_002).	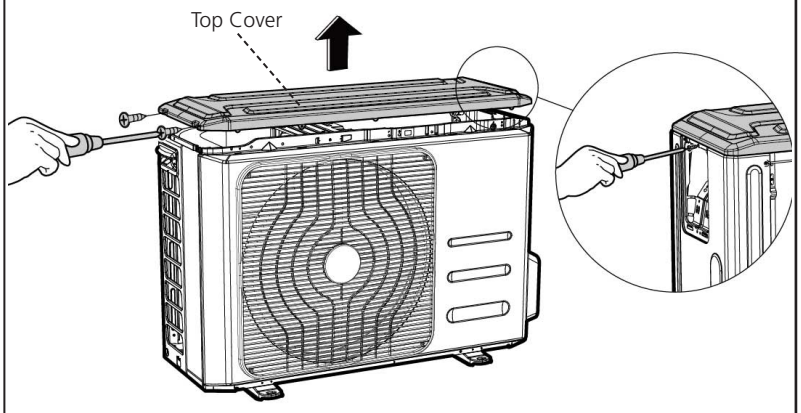 **CJ_B30_002**

Note: This section is for reference only. Actual unit appearance may vary.

Procedure	Illustration
4) Remove the screws of the front panel and then remove the front panel (8 screws) (see CJ_B30_003).	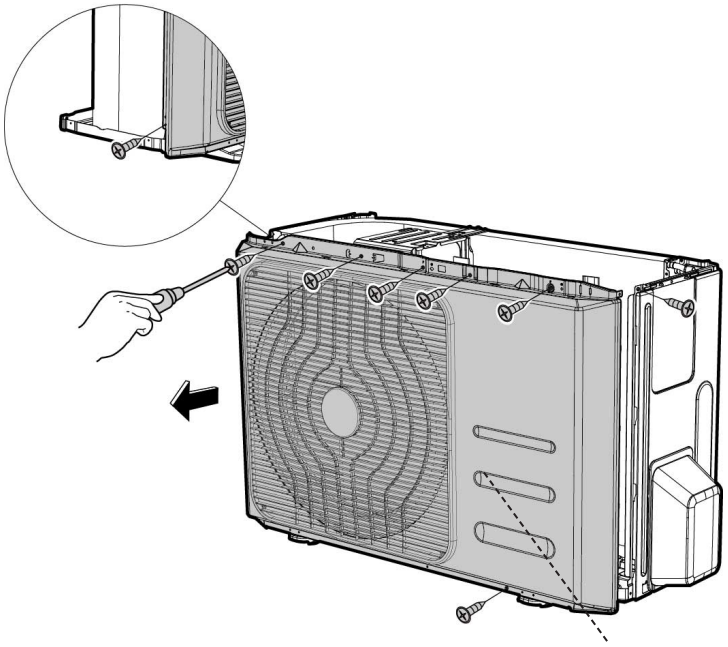 **CJ_B30_003**
5) Remove the screws of water collecting cover and then remove the water collecting cover (2 screws) (see CJ_B30_004).	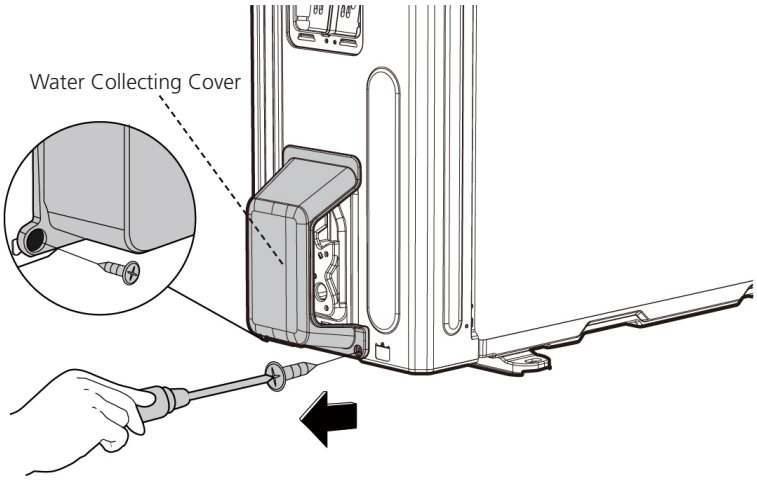 **CJ_B30_004**

Note: This section is for reference only. Actual unit appearance may vary.

Procedure	Illustration
6) Remove the screws of the rear net and then remove the rear net (2 screws) (see CJ_B30_005). (for some models)	 CJ_B30_005
7) Remove the screws of the right panel and then remove the right panel (5 screws) (see CJ_B30_006).	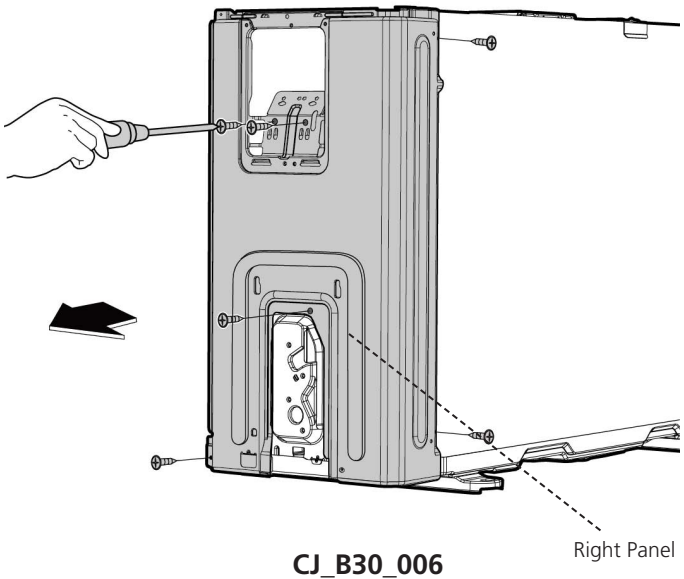 CJ_B30_006

Note: This section is for reference only. Actual unit appearance may vary.

3. CA30

Procedure	Illustration
1) Turn off the air conditioner and the power breaker. 2) Remove the screws of the big handle and then remove the big handle (1 screws) (see CJ_CA30_001).	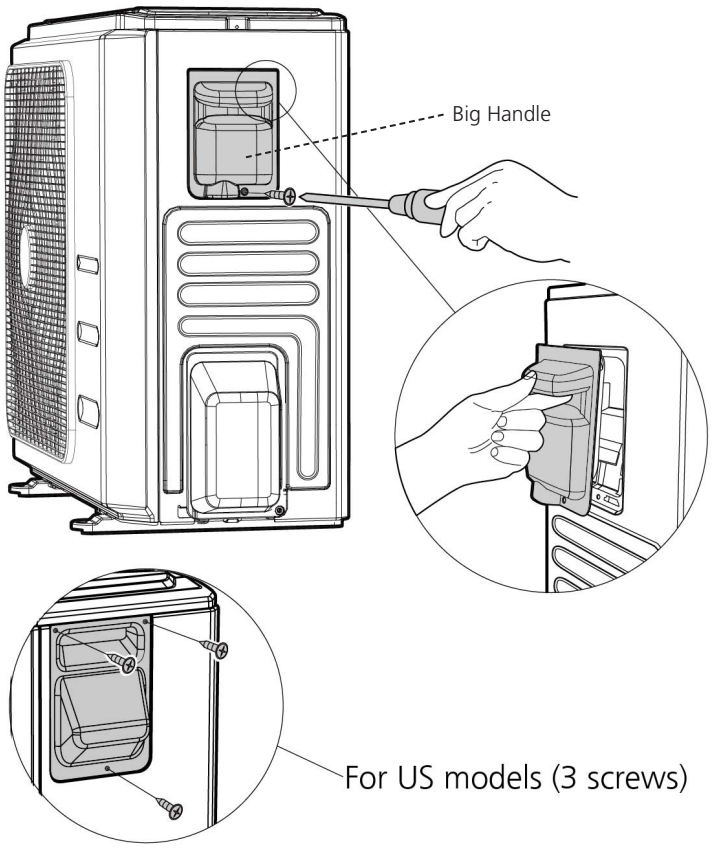 **CJ_CA30_001**
3) Remove the screws of the top cover and then remove the top cover (3 screws). One of the screws is located underneath the big handle (see CJ_ CA30_002).	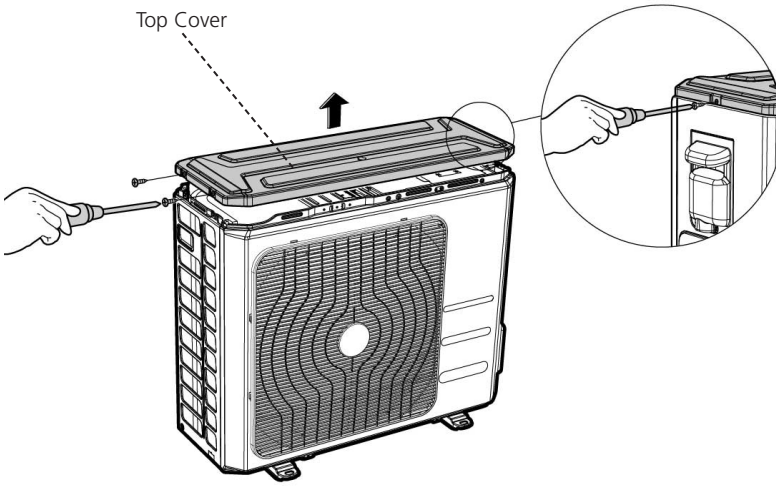 **CJ_CA30_002**

Note: This section is for reference only. Actual unit appearance may vary.

Procedure	Illustration
4) Remove the screws of the front panel and then remove the front panel (7 screws) (see CJ_CA30_003).	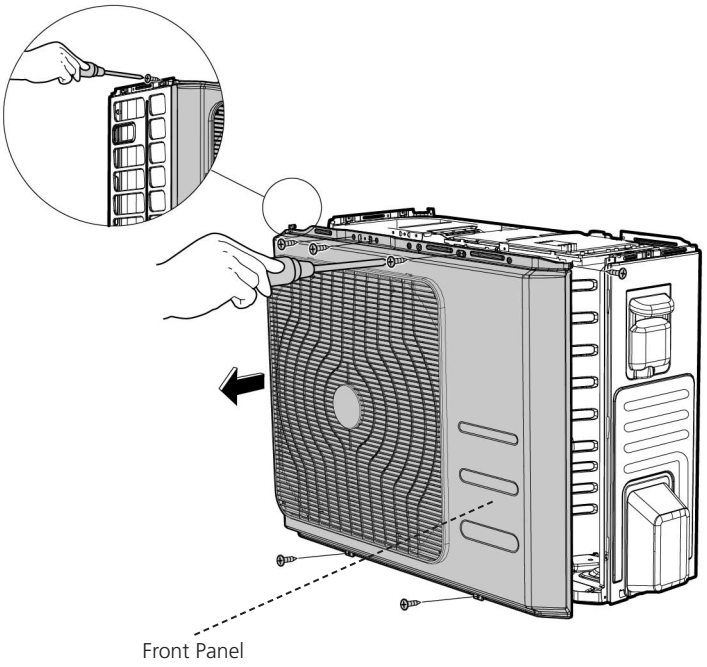 **CJ_CA30_003**
5) Remove the screws of water collecting cover and then remove the water collecting cover (2 screws) (see CJ_CA30_004).	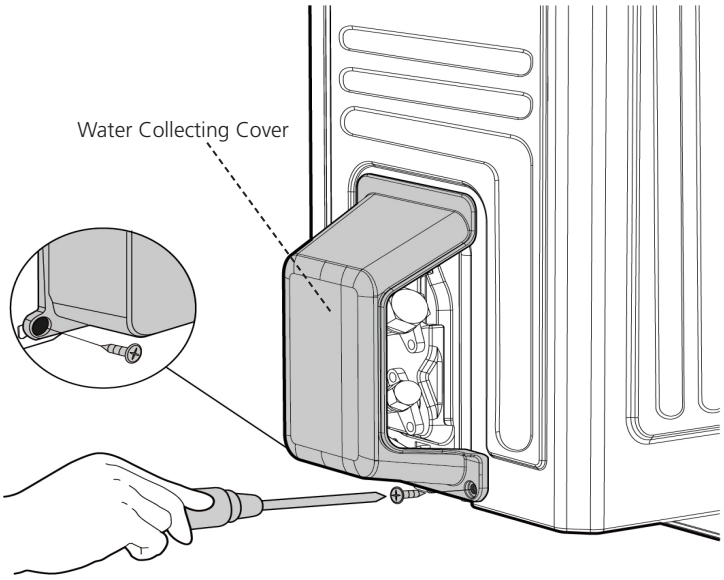 **CJ_CA30_004**

Note: This section is for reference only. Actual unit appearance may vary.

Procedure	Illustration
6) Remove the screws of the rear net and then remove the rear net (2 screws) (see CJ_CA30_005). (for some models)	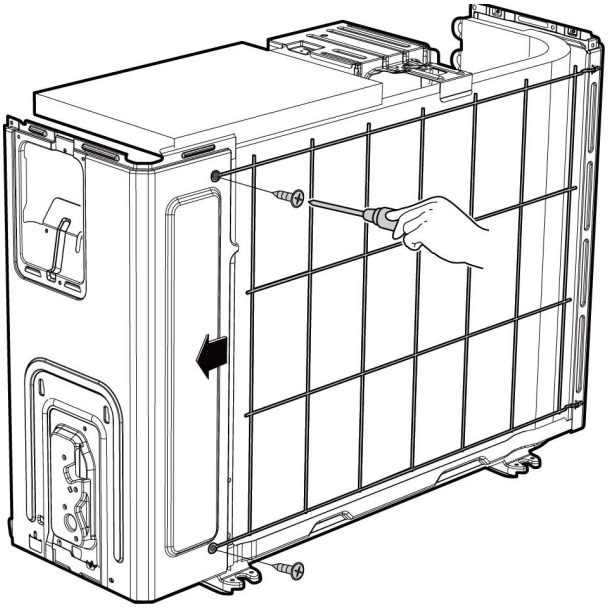 CJ_CA30_005
7) Remove the screws of the right panel and then remove the right panel (7 screws) (see CJ_CA30_006).	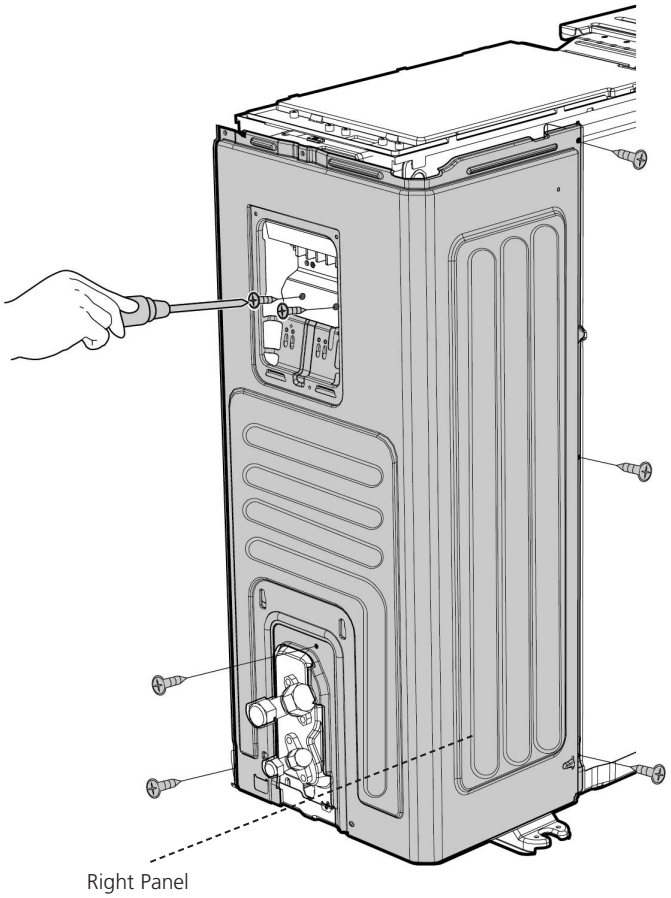 CJ_CA30_006

Note: This section is for reference only. Actual unit appearance may vary.

4. D30

Procedure	Illustration
1) Turn off the air conditioner and the power breaker. 2) Remove the screws of the big handle and then remove the big handle (2 screws) (see CJ_D30_001).	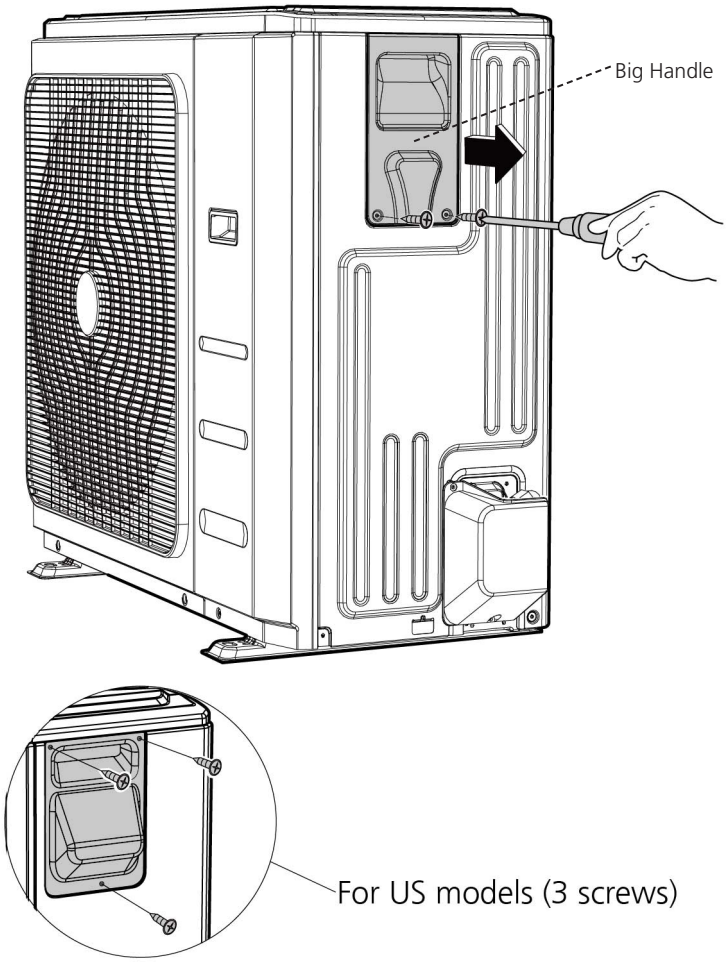 **CJ_D30_001**
3) Remove the screws of the top cover and then remove the top cover (4 screws). Two of the screws is located underneath the big handle (see CJ_ D30_002).	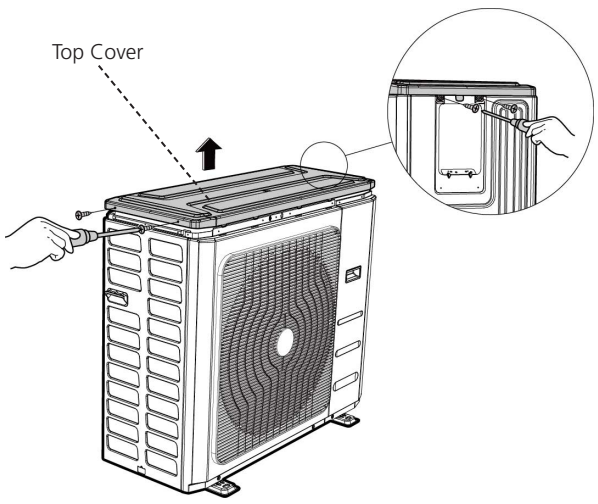 **CJ_D30_002**

Note: This section is for reference only. Actual unit appearance may vary.

Procedure	Illustration
4) Remove the screws of the front right panel and then remove the front right panel (2 screws) (see CJ_D30_003).	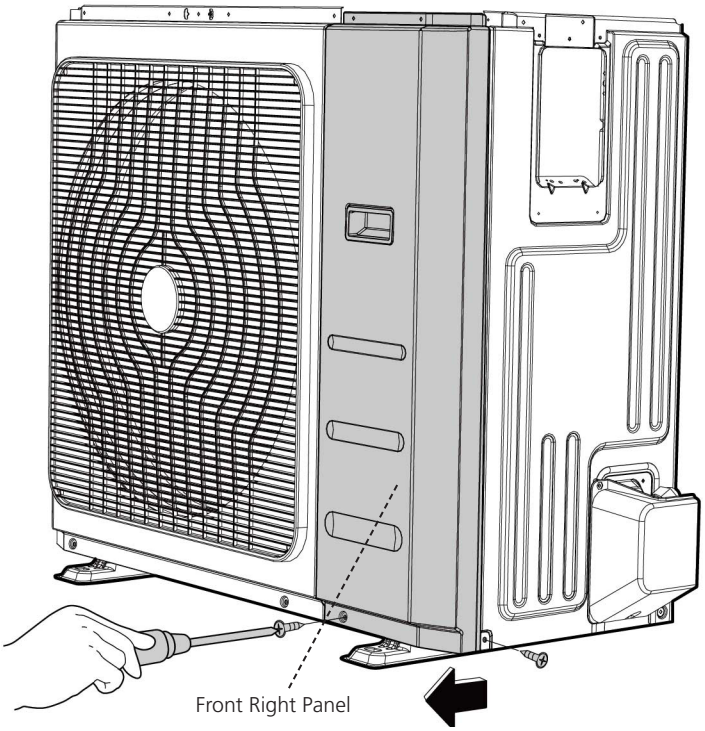 **CJ_D30_003**
5) Remove the screws of the front panel and then remove the front panel (9 screws) (see CJ_D30_004).	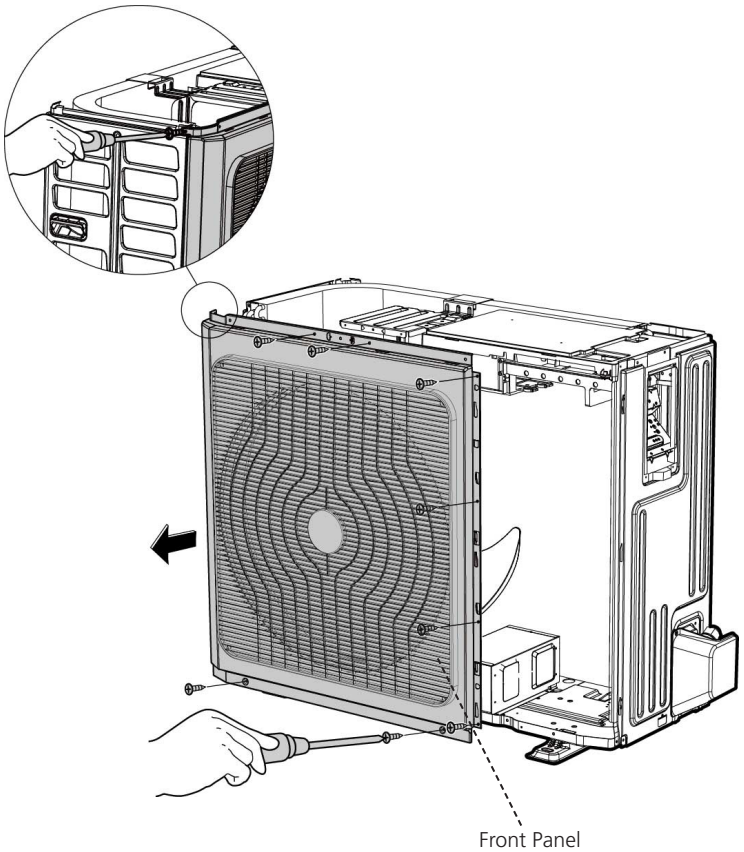 **CJ_D30_004**

Note: This section is for reference only. Actual unit appearance may vary.

Procedure	Illustration
6) Remove the screws of water collecting cover and then remove the water collecting cover (2 screws) (see CJ_D30_005).	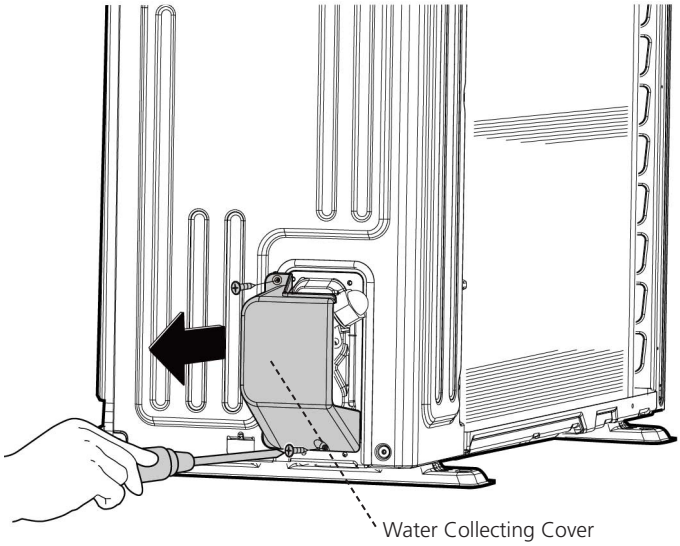 **CJ_D30_005**
7) Remove the screws of the rear net and then remove the rear net (2 screws) (see CJ_D30_006). (for some models)	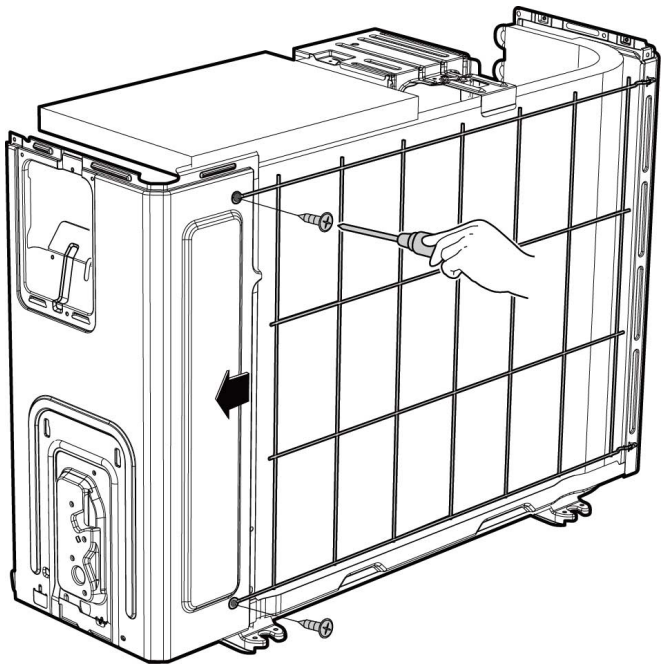 **CJ_D30_006**

Note: This section is for reference only. Actual unit appearance may vary.

Procedure	Illustration
8) Remove the screws of the right panel and then remove the right panel (8 screws) (see CJ_D30_007).	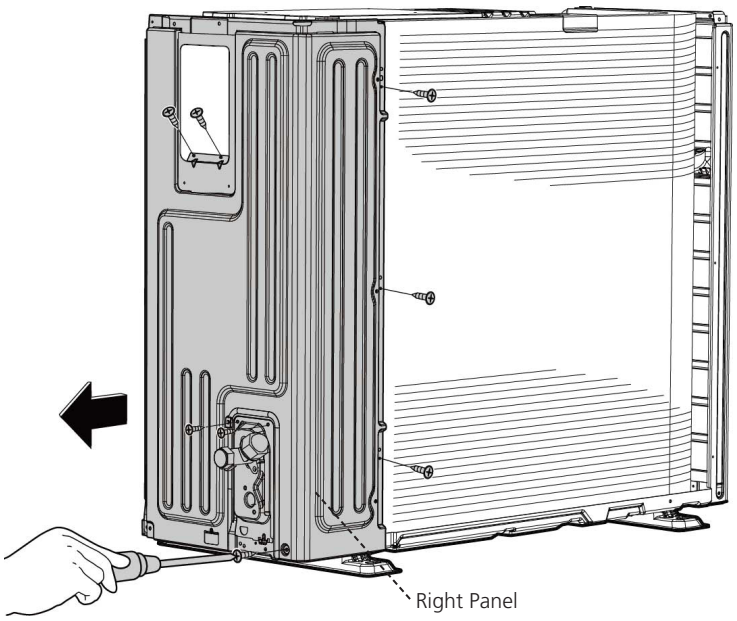 CJ_D30_007

Note: This section is for reference only. Actual unit appearance may vary.

5. X230/X330

Procedure	Illustration
1) Turn off the air conditioner and the power breaker. 2) Remove the screw of the big handle and then remove the big handle (1 screws) (see CJ_X230_001).	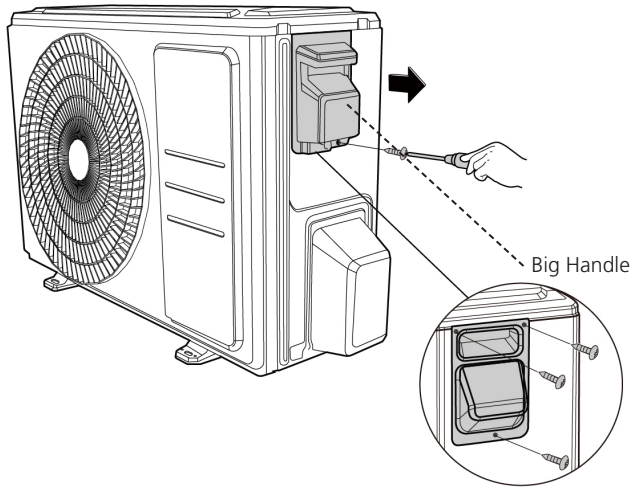 **CJ_X230_001**
3) Remove the screws of the top cover and then remove the top cover (4 screws). One of the screws is located underneath the big handle (see CJ_X230_002).	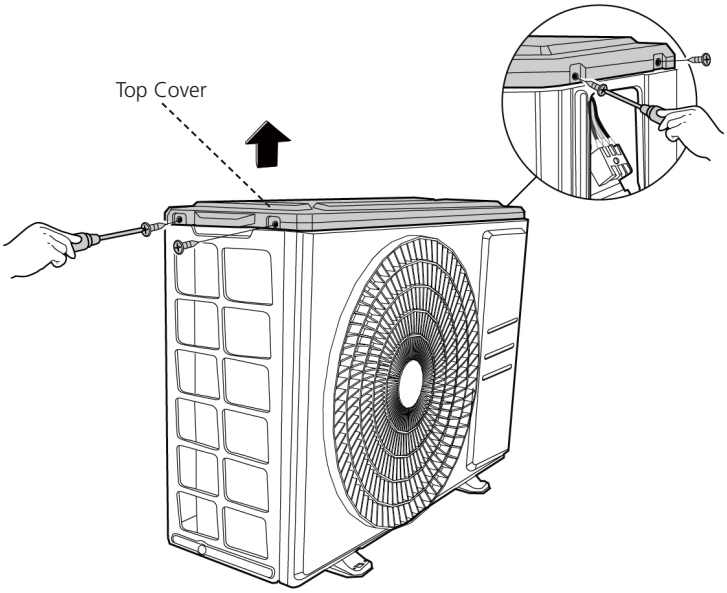 **CJ_X230_002**

Note: This section is for reference only. Actual unit appearance may vary.

Procedure	Illustration
4) Remove the screws of water collecting cover and then remove the water collecting cover (2 screws) (see CJ_X230_003).	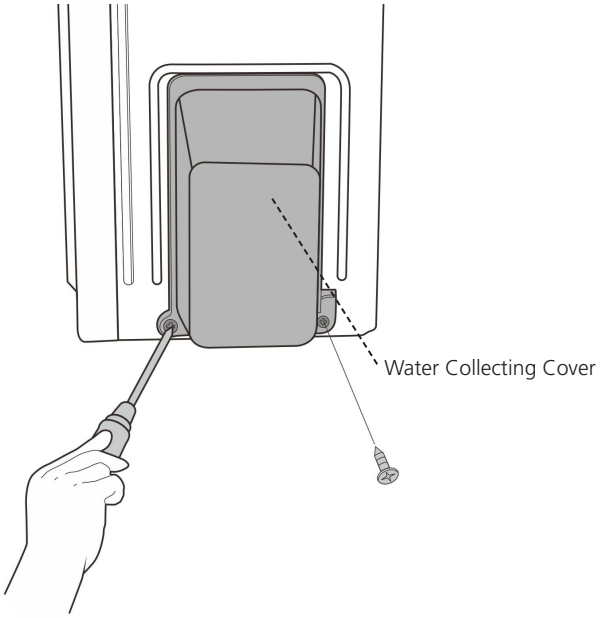 **CJ_X230_003**
5) Remove the screws of the front panel and then remove the front panel (7 screws(onoff models) or 9 screws(inverter models) (see CJ_X230_004).	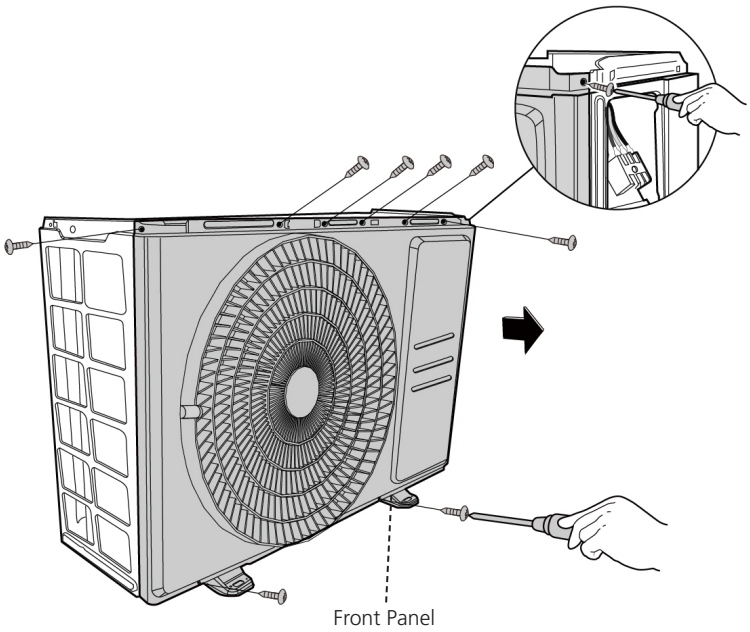 **CJ_X230_004**

Note: This section is for reference only. Actual unit appearance may vary.

Procedure	Illustration
6) Remove the screws of the right panel and then remove the right panel (5 screws) (see CJ_X230_005).	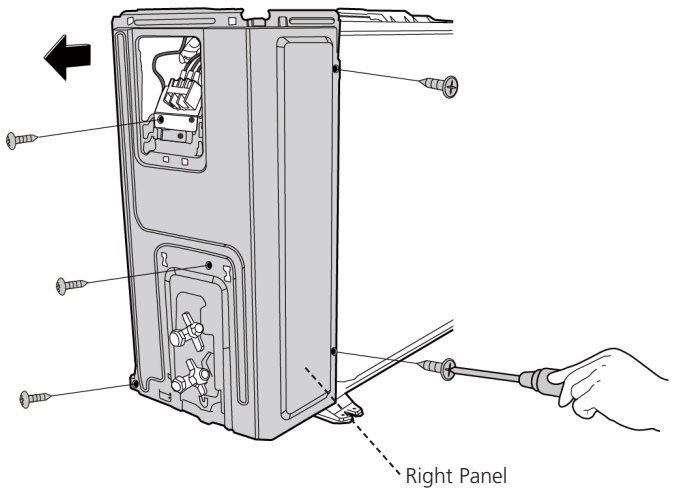 **CJ_X230_005**

Note: This section is for reference only. Actual unit appearance may vary.

6.X430

Procedure	Illustration
1) Turn off the air conditioner and the power breaker. 2) Remove the screw of the big handle and then remove the big handle (1 screw) (see CJ_X430_001).	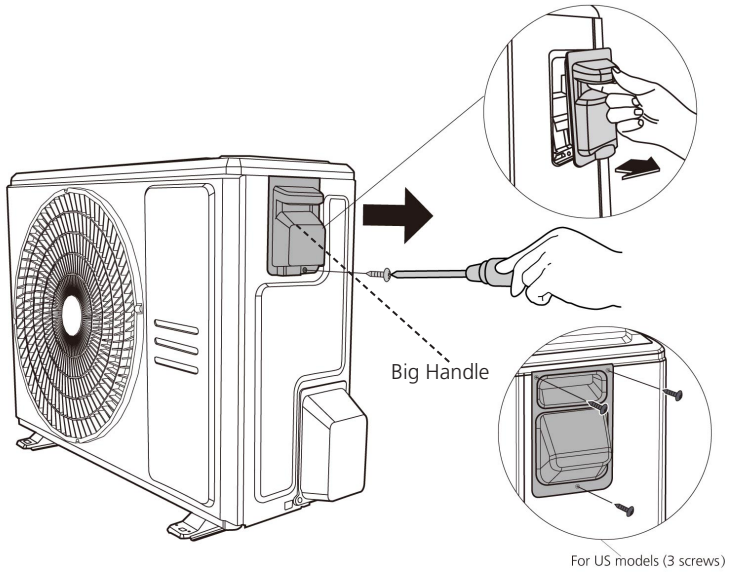 **CJ_X430_001**
3) Remove the screws of the top cover and then remove the top cover (3 screws). One of the screws is located underneath the big handle (see CJ_X430_002).	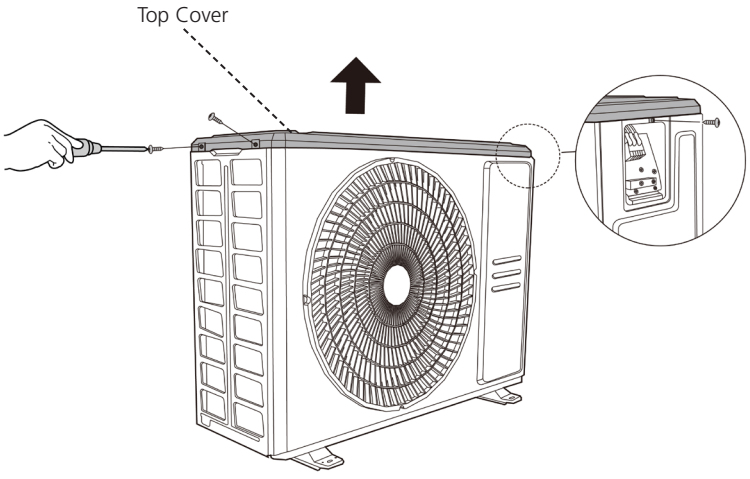 **CJ_X430_002**

Note: This section is for reference only. Actual unit appearance may vary.

Procedure	Illustration
4) Remove the screws of water collecting cover and then remove the water collecting cover (2 screws) (see CJ_X430_003).	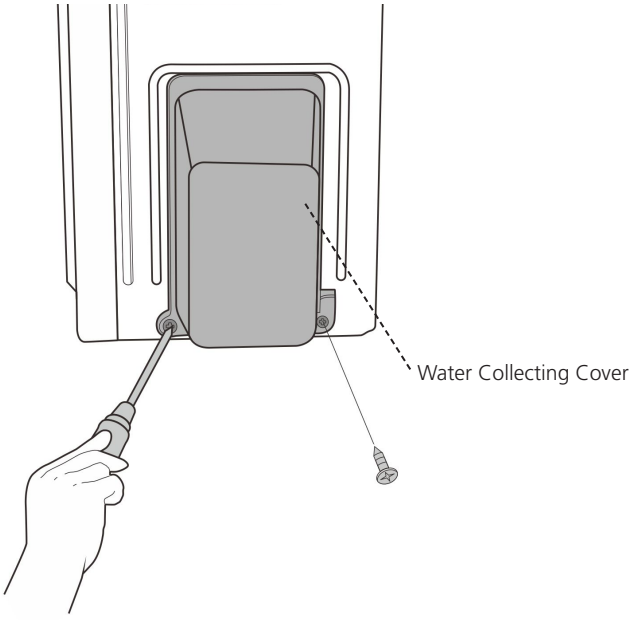 CJ_X430_003
5) Remove the screws of the front panel and then remove the front panel (7 screws(onoff models) or 9 screws(inverter models) (see CJ_X430_004).	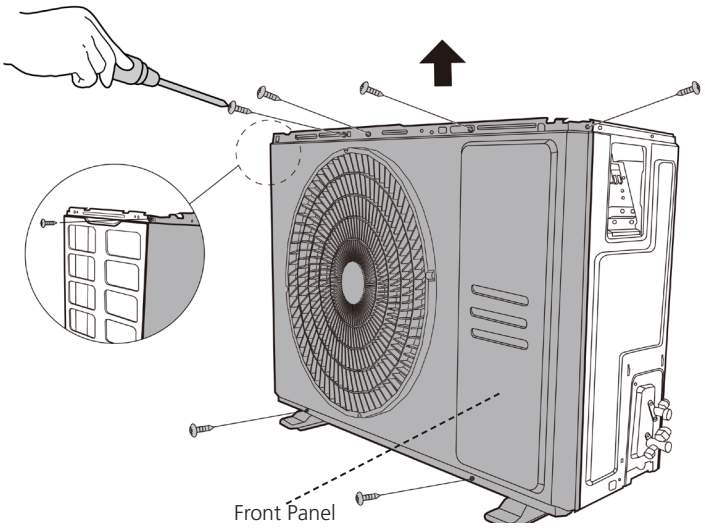 CJ_X430_004

Note: This section is for reference only. Actual unit appearance may vary.

Procedure	Illustration
6) Remove the screws of the right panel and then remove the right panel (6 screws) (see CJ_X430_005).	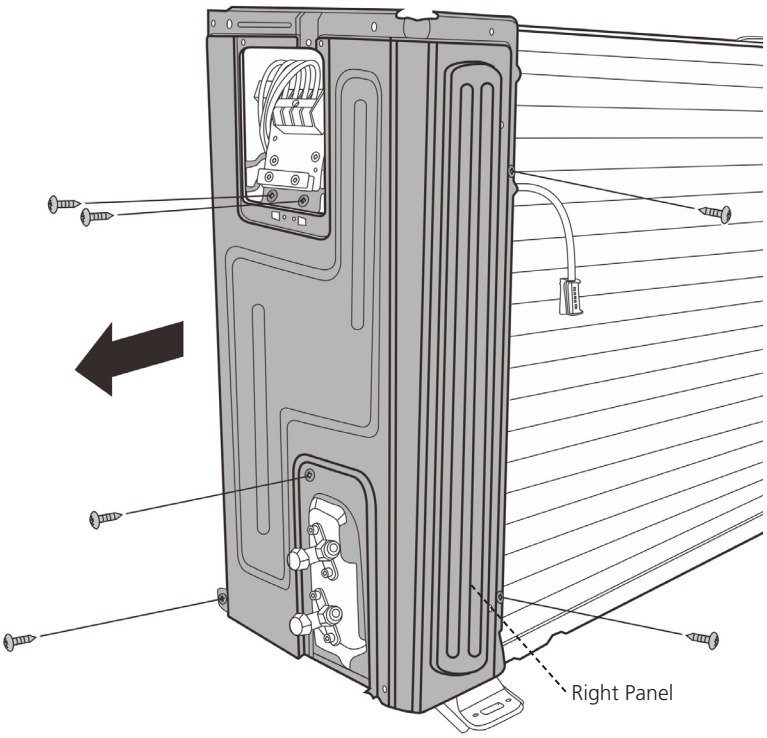 **CJ_X430_005**

Note: This section is for reference only. Actual unit appearance may vary.

6. E30/590

Procedure	Illustration
1) Turn off the air conditioner and the power breaker. 2) Remove the screws of the big handle and then remove the big handle (2 screws) (see CJ_E30_001).	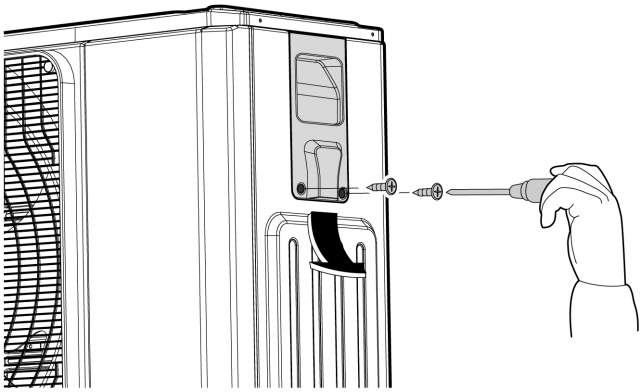 CJ_E30_001
3) Remove the screws of the top cover and then remove the top cover (4 screws). Two of the screws is located underneath the big handle (see CJ_E30_002).	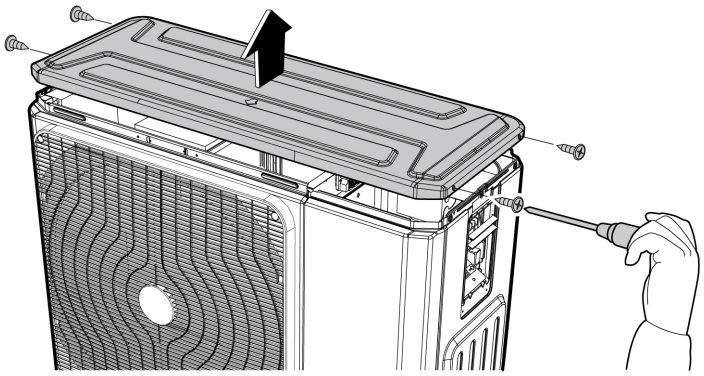 CJ_E30_002
4) Remove the screws of water collecting cover and then remove the water collecting cover (2 screw) (see CJ_E30_003).	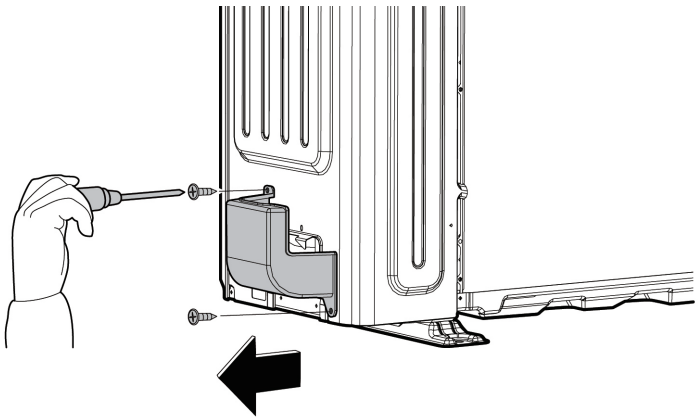 CJ_E30_003

Note: This section is for reference only. Actual unit appearance may vary.

Procedure	Illustration
5) Remove the screws of the front right panel and then remove the front right panel (2 screws) (see CJ_E30_004).	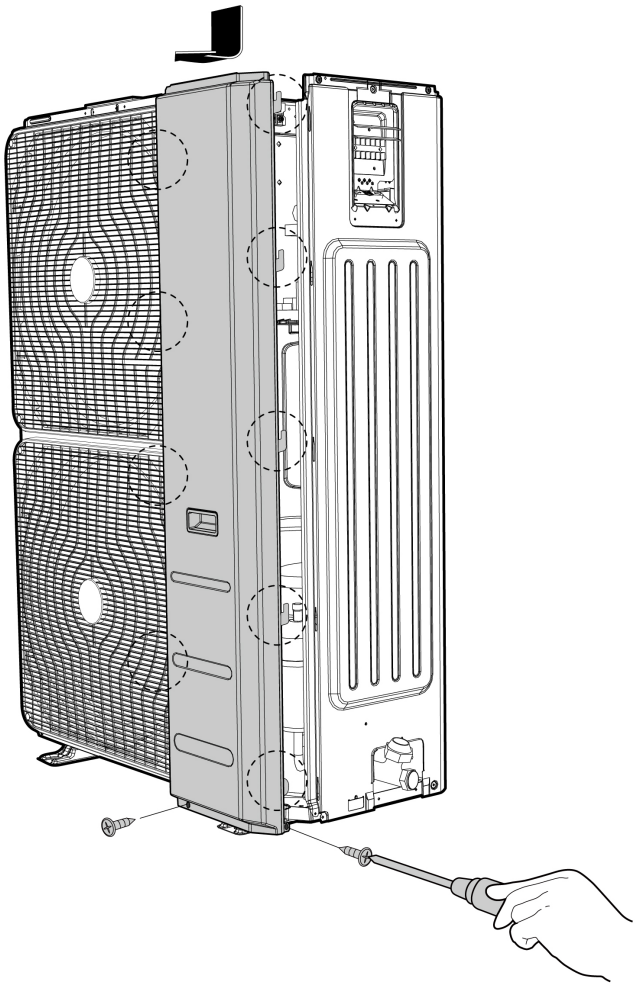 CJ_E30_004

Note: This section is for reference only. Actual unit appearance may vary.

Procedure	Illustration
1) Remove the screws of the front panel and then remove the front panel (7 screws) (see CJ_E30_005).	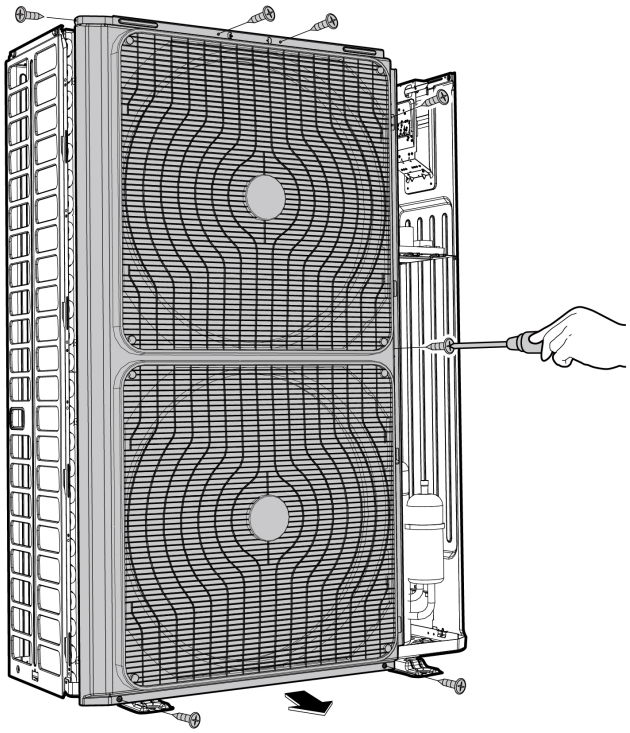 CJ_E30_005
2) Remove the screws of the right panel and then remove the right panel (10 screws) (see CJ_E30_006).	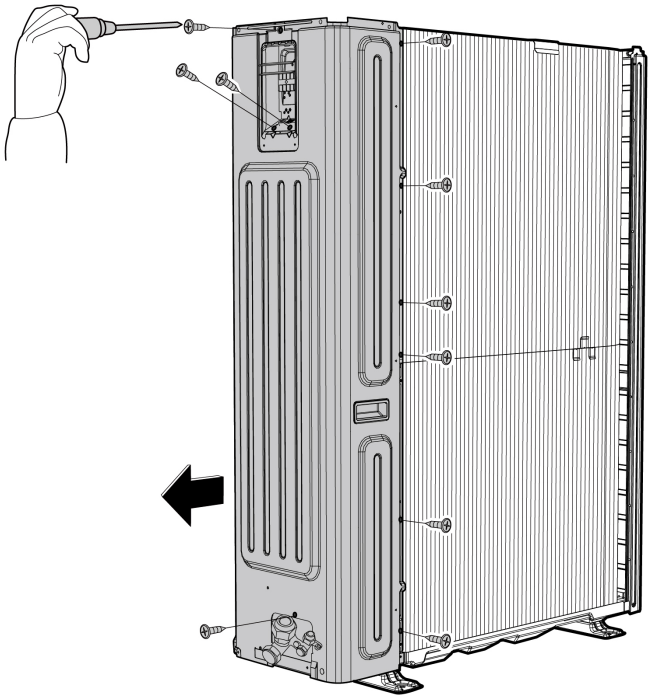 CJ_E30_006

Note: This section is for reference only. Actual unit appearance may vary.

2.2 Electrical parts

WARNING: Antistatic gloves must be worn when you disassemble the electronic box.

Note: Remove the air outlet grille(refer to 3.1 Panel Plate) before disassembling electrical parts.

i) PCB for ON-OFF Models

1. PCB board 1

Procedure	Illustration
1) Remove the two screws fixed the electronic control board (see CJ_ODU_PCB_001). 2) Disconnect the connectors for fan motor. (Blue wire, yellow wire, red wire, brown wire and black wire. The blue wire and red wire are on the capacitor. The black wire connects with terminal 4.) (see CJ_ODU_PCB_001) 3) Disconnect the wires connected to the compressor. (Black wire connects with terminal 1,blue wire and red wire connect with the compressor capacitor) (see CJ_ODU_PCB_001) 4) Disconnect the wires connected to 4-way valve.(Blue wires on terminal 2&3) (see CJ_ODU_PCB_001) 5) Remove the fixing screw of the compressor capacitor, then pull it out (see CJ_ODU_PCB_001) 6) Remove the electrical parts (see CJ_ODU_PCB_001) 7) For models with AC conductor, remove 2 screws of it showed in the figure.	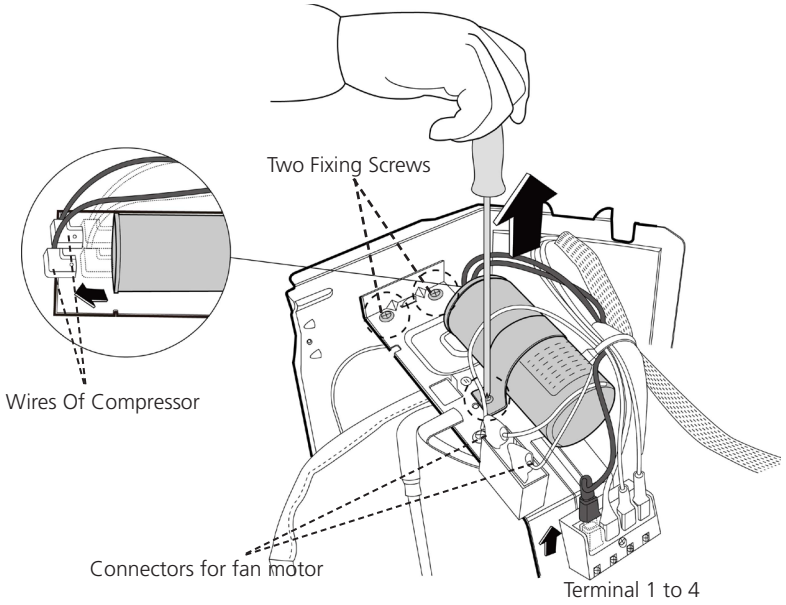 **CJ_ODU_PCB_001-01** 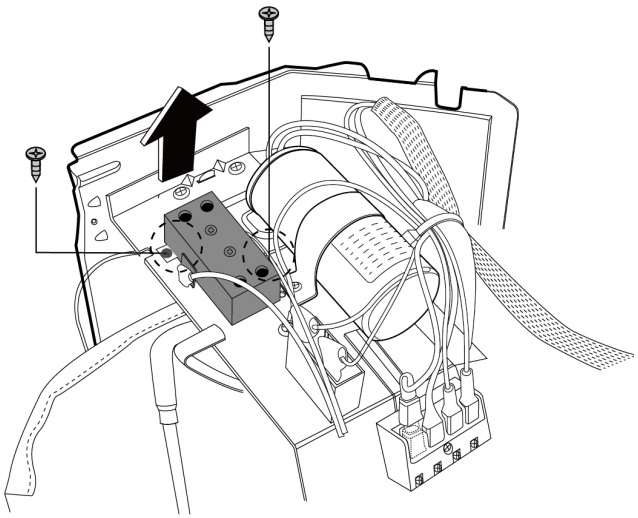 **CJ_ODU_PCB_001-02**

Note: This section is for reference only. Actual unit appearance may vary.

Procedure	Illustration
8) For models with subzero refrigeration control board, remove 3 screws of it showed in the figure.	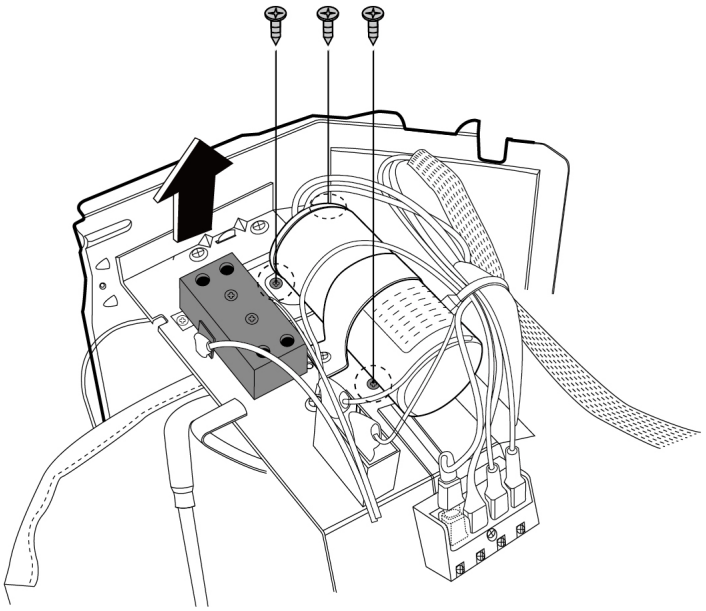 CJ_ODU_PCB_001-03
9) The subzero refrigeration control board is in the back of the medal sheet.	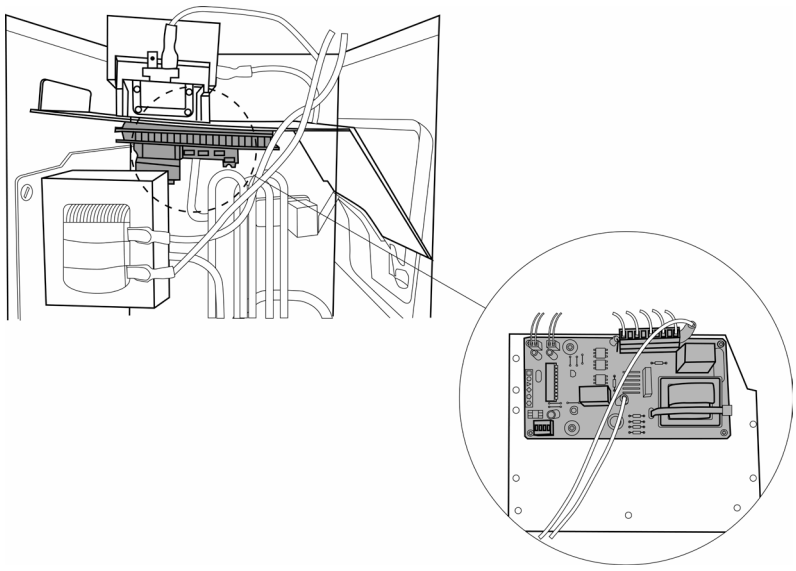 CJ_ODU_PCB_001-04

Note: This section is for reference only. Actual unit appearance may vary.

2. PCB board 2

Procedure	Illustration
1) Disconnect the power transformer (see CJ_ODU_010) 2) Disconnect the wires connected to terminals. (see CJ_ODU_010) 3) Disconnect the wires connected to contactor. (see CJ_ODU_010) 4) Disconnect the wires connected to T3/T4 sensor. (see CJ_ODU_010)	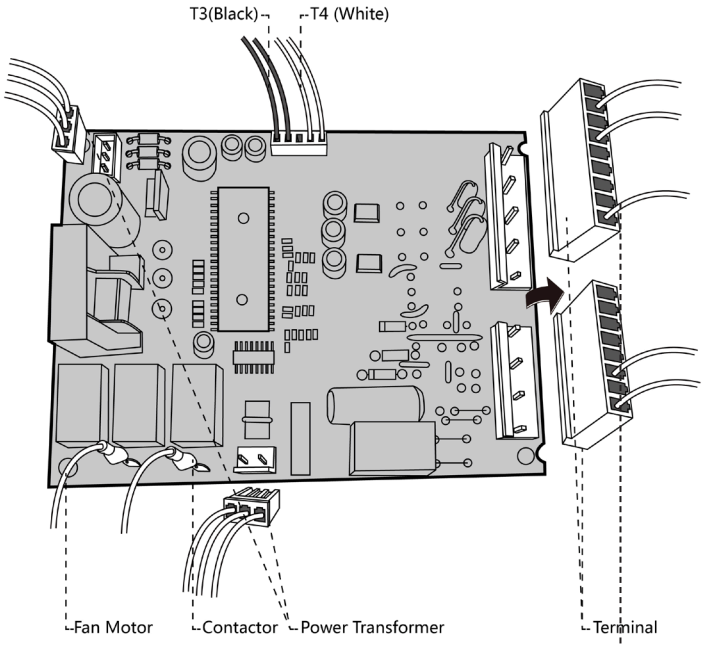 **CJ_ODU_PCB_002-1**

Note: This section is for reference only. Actual unit appearance may vary.

3. PCB board 3

Procedure	Illustration
1) Disconnect the wires connected to the transformer. (see CJ_ODU_PCB_003-1) 2) Disconnect the wires connected to high/low pressure switch. (see CJ_ODU_PCB_003-1 3) Disconnect the wires connected to indoor unit. (see CJ_ODU_PCB_003-1) 4) Disconnect the wires connected to AC contactor. (see CJ_ODU_PCB_003-1)	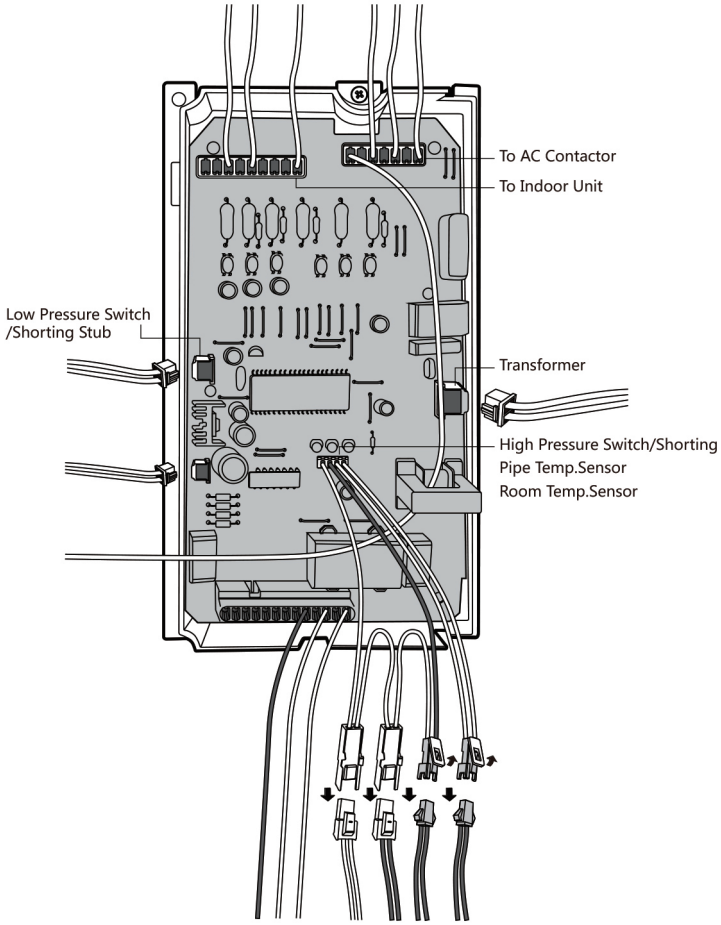 **CJ_ODU_PCB_003-1**
5) Remove the screws of the capacitor and then remove it (1 screw for each capacitor). (see CJ_ODU_PCB_003-2)	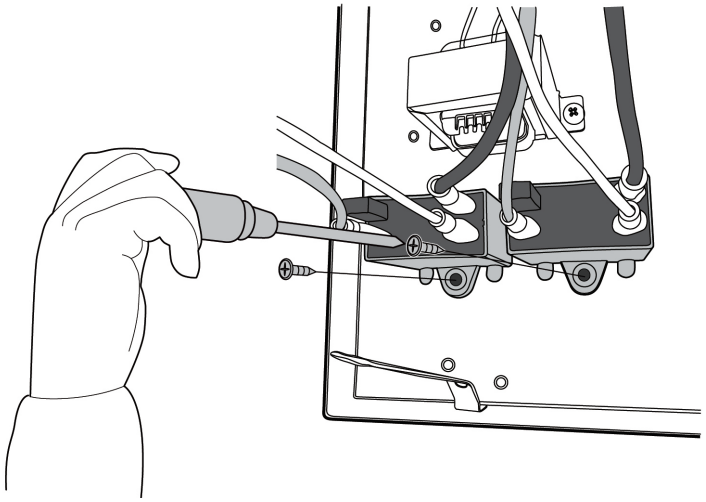 **CJ_ODU_PCB_003-2**

Note: This section is for reference only. Actual unit appearance may vary.

Procedure	Illustration
6) Remove the 1 screw of the AC contactor and then remove it. (see CJ_ODU_PCB_003-3)	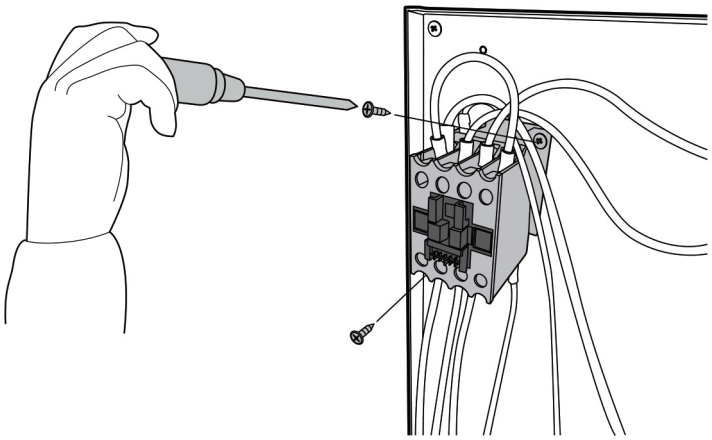 CJ_ODU_PCB_003-3
7) Remove 2 screws of the transformer and then remove it. (see CJ_ODU_ PCB_003-4)	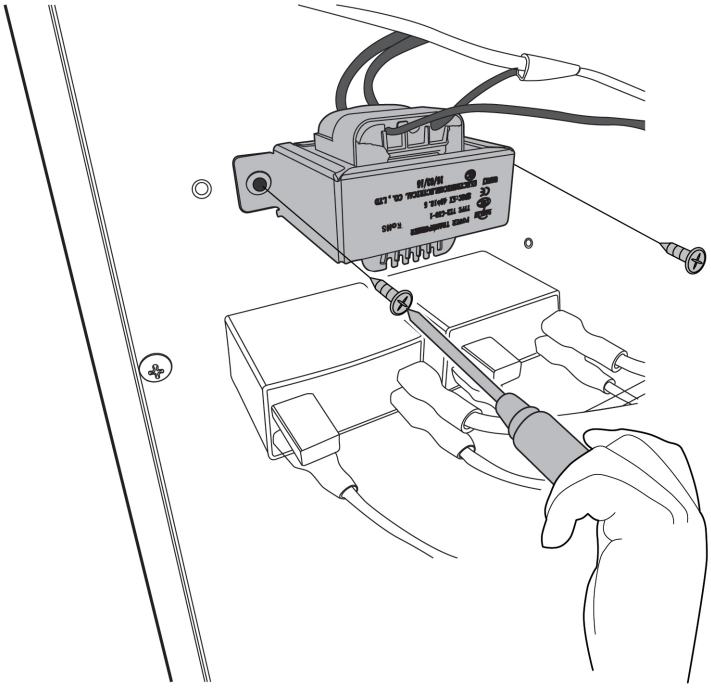 CJ_ODU_PCB_003-4

Note: This section is for reference only. Actual unit appearance may vary.

4. PCB board 14

Procedure	Illustration
1) Remove the fixing screw of the compressor capacitor, then pull it out (see CJ_ODU_PCB_014-1) 2) Remove 2 screws of the transformer and then remove it. (see CJ_ODU_PCB_014-1) 3) Remove the fixing screw of the fan motor capacitor, then remove it. (see CJ_ODU_PCB_014-1) 4) Remove the 4 screws of the electronic installing box and then remove it. (see CJ_ODU_PCB_014-1) (for some models) 5) Remove the 2 screws of the AC contactor and then remove it. (see CJ_ODU_PCB_014-2)	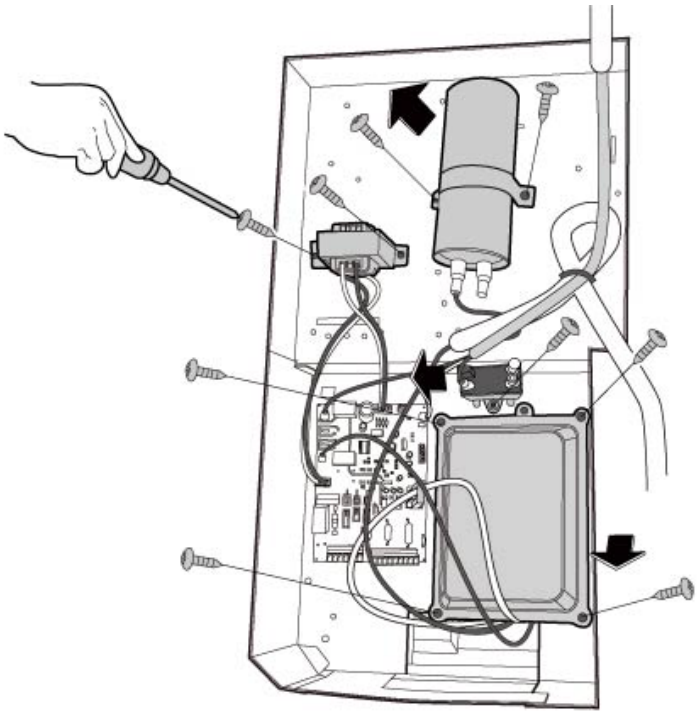 CJ_ODU_PCB_014-1 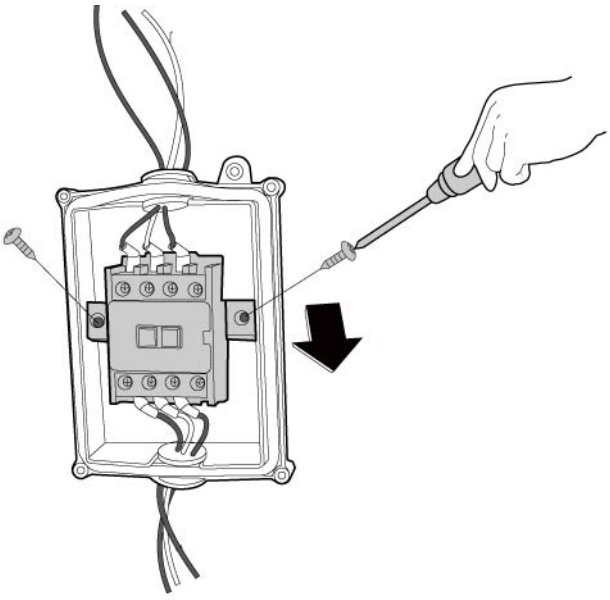 CJ_ODU_PCB_014-2

Note: This section is for reference only. Actual unit appearance may vary.

Procedure	Illustration
6) Disconnect the power transformer (see CJ_ODU_014-3) 7) Disconnect the wires connected to terminals. (see CJ_ODU_014-3) 8) Disconnect the wires connected to contactor. (see CJ_ODU_014-3) 9) Disconnect the wires connected to T3/T4 sensor. (see CJ_ODU_014-3)	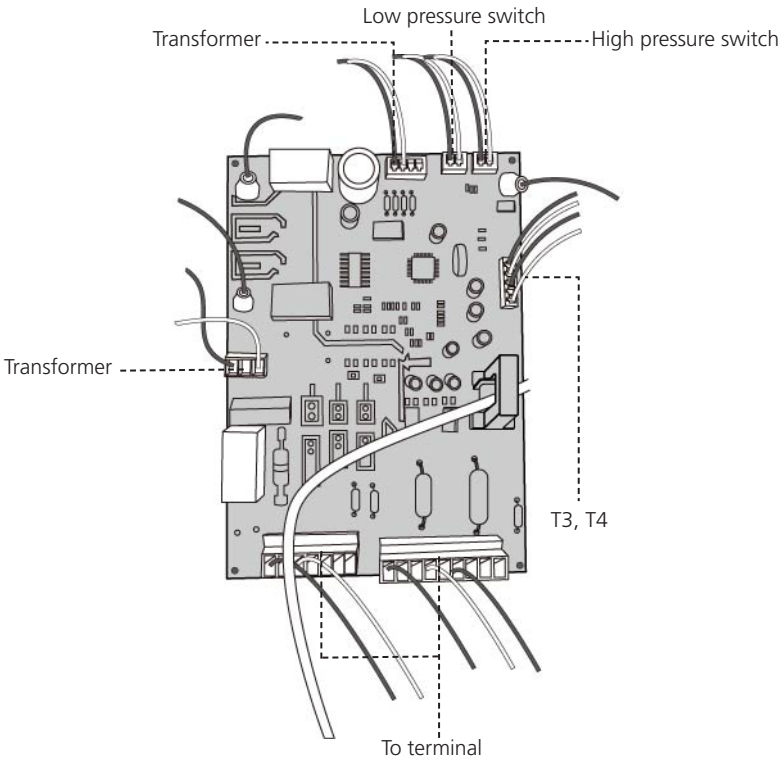 **CJ_ODU_PCB_014-3**

Note: This section is for reference only. Actual unit appearance may vary.

5. PCB board 15

Procedure	Illustration
1) Remove the 5 screws of the electronic installing box and then remove it. (see CJ_ODU_PCB_015-1)(for some models)	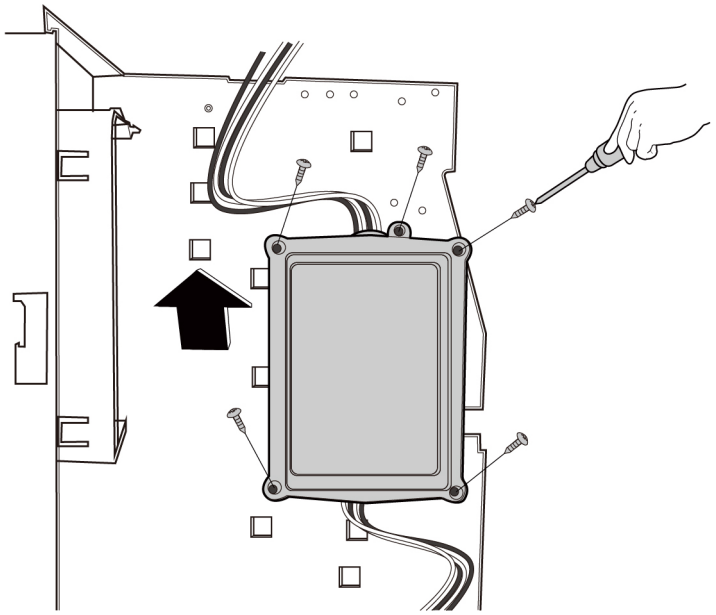 CJ_ODU_PCB_015-1
2) Remove the 2 screws of the AC contactor and then remove it. (see CJ_ODU_PCB_015-2)	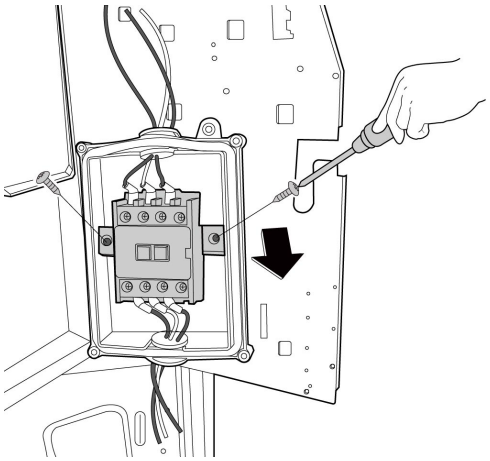 CJ_ODU_PCB_015-2
3) Remove the screws of the capacitor and then remove it (1 screw for each capacitor). (see CJ_ODU_PCB_015-3)	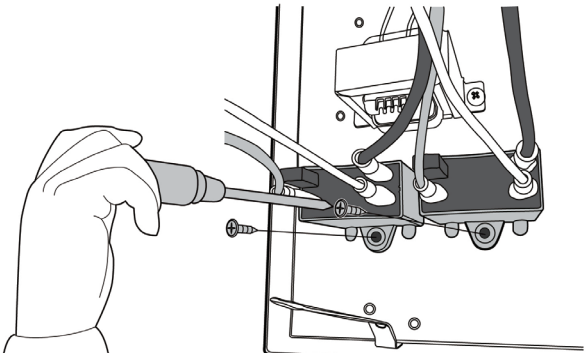 CJ_ODU_PCB_015-3

Note: This section is for reference only. Actual unit appearance may vary.

Procedure	Illustration
4) Remove 2 screws of the transformer and then remove it. (see CJ_ODU_PCB_015-4)	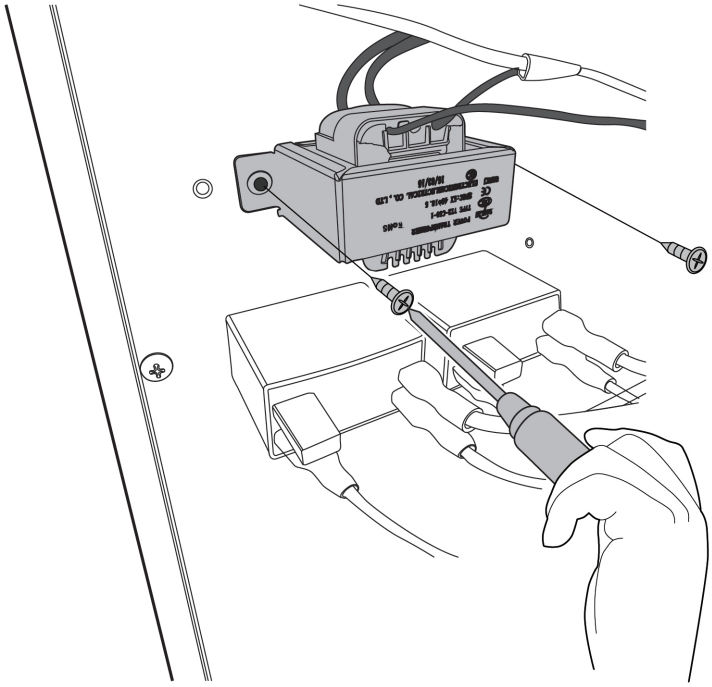 CJ_ODU_PCB_015-4
5) Disconnect the wires connected to the transformer. (see CJ_ODU_PCB_015-5) 6) Disconnect the wires connected to high/low pressure switch. (see CJ_ODU_PCB_015-5) 7) Disconnect the wires connected to T3/T4 sensor. (see CJ_ODU_015-5) 8) Disconnect the wires connected to terminal. (see CJ_ODU_PCB_015-5)	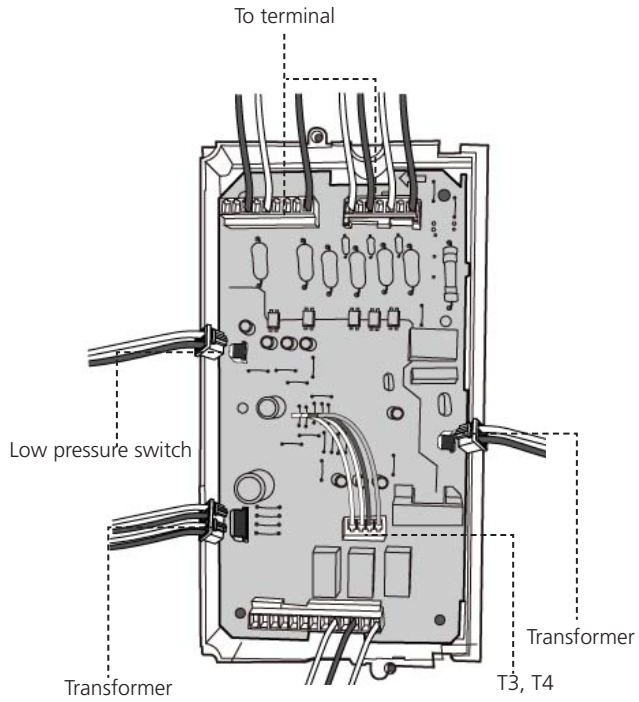 CJ_ODU_PCB_015-5

Note: This section is for reference only. Actual unit appearance may vary.

ii) PCB for Inverter Models

6. PCB board 4

Procedure	Illustration
1) Remove the screws of the top cover. (2 screws) (see CJ_ODU_PCB_004-1).	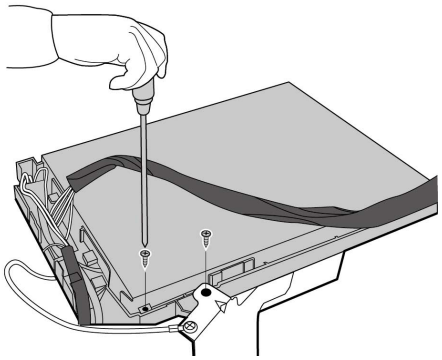 CJ_ODU_PCB_004-1
2) Unfix the hooks and then open the electronic control box cover (4 hooks) (see CJ_ODU_PCB_004-2).	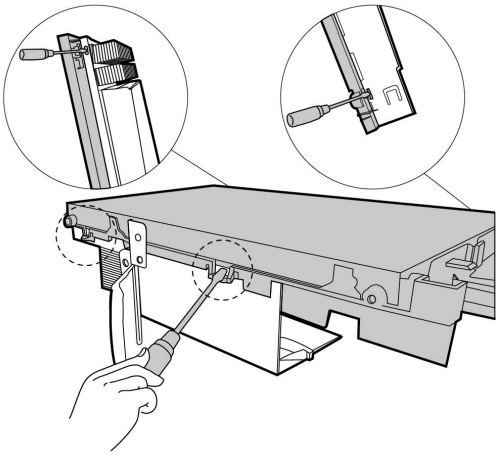 CJ_ODU_PCB_004-2
3) Disconnect the connector for fan motor from the electronic control board (see CJ_ODU_PCB_004-3). 4) Remove the connector for the compressor (see CJ_ODU_PCB_004-3). 5) Pull out the two blue wires connected with the four way valve (CJ_ODU_PCB_004-3). 6) Pull out connectors of the condenser coil temp. sensor(T3),outdoor ambient temp. sensor(T4) and discharge temp. sensor(TP) (CJ_ODU_PCB_004-3). 7) Disconnect the electronic expansion valve wire (CJ_ODU_PCB_004-3). 8) Then remove the electronic control board.	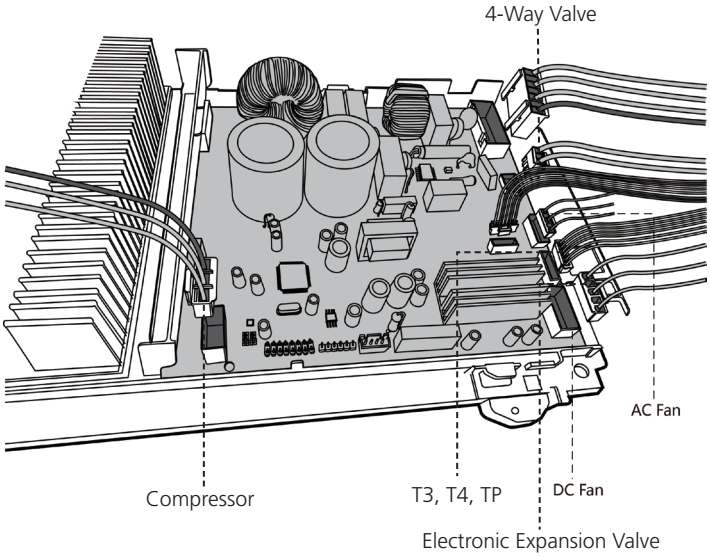 CJ_ODU_PCB_004-3

Note: This section is for reference only. Actual unit appearance may vary.

7. PCB board 5

Procedure	Illustration
1) Unfix the hooks and then open the electronic control box cover (4 hooks) (see CJ_ODU_PCB_005-1).	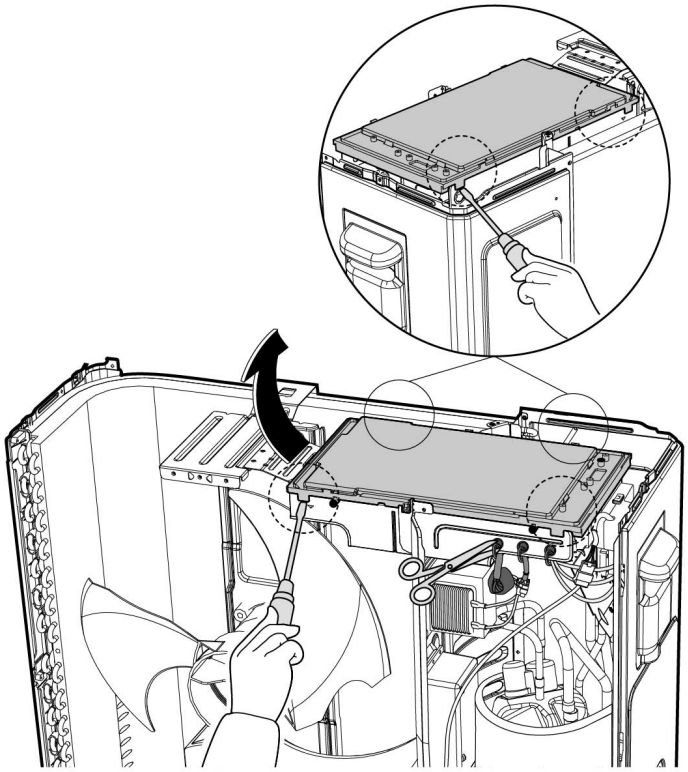 CJ_ODU_PCB_005-1
2) Disconnect the connector for fan motor from the electronic control board (see CJ_ODU_PCB_005-2). 3) Remove the connector for the compressor (see CJ_ODU_PCB_005-2). 4) Pull out the two blue wires connected with the four way valve (see CJ_ODU_PCB_005-2). 5) Pull out connectors of the condenser coil temp. sensor(T3),outdoor ambient temp. sensor(T4) and discharge temp. sensor(TP) (see CJ_ODU_PCB_005-2). 6) Disconnect the electronic expansion valve wire (see Fig CJ_ODU_PCB_005-2). 7) Then remove the electronic control board.	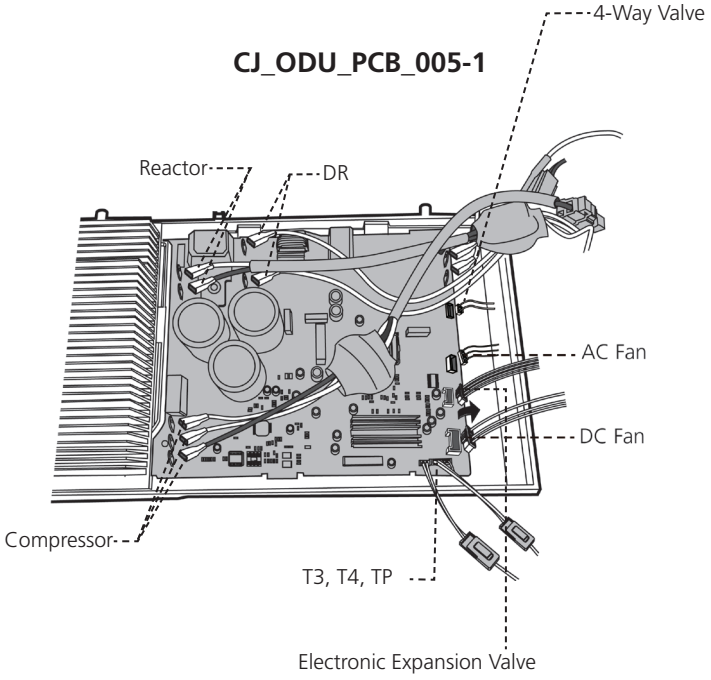 CJ_ODU_PCB_005-2

Note: This section is for reference only. Actual unit appearance may vary.

8. PCB board 6

Procedure	Illustration
1) Remove the screws and unfix the hooks, then open the electronic control box cover (5 screws and 2 hooks)(see CJ_ODU_PCB_006-1).	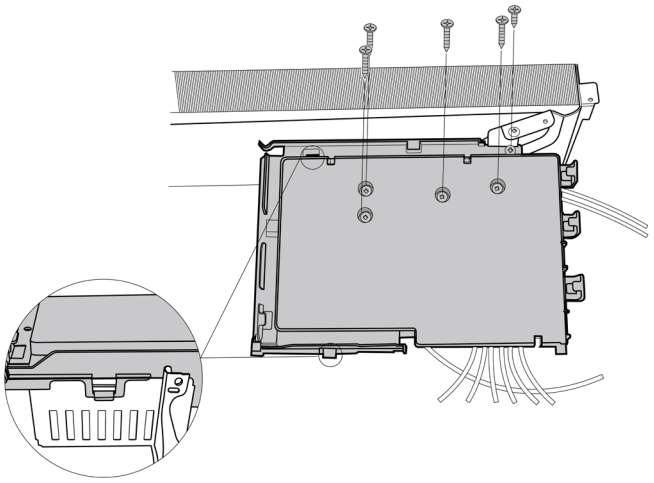 CJ_ODU_PCB_006-1
2) Disconnect the connector for fan motor from the electronic control board (see CJ_ODU_PCB_006-2). 3) Remove the connector for the compressor (see CJ_ODU_PCB_006-2). 4) Pull out the two blue wires connected with the four way valve (see CJ_ODU_PCB_006-2). 5) Pull out connectors of the condenser coil temp. sensor(T3),outdoor ambient temp. sensor(T4) and discharge temp. sensor(TP) (see CJ_ODU_PCB_006-2). 6) Disconnect the electronic expansion valve wire (see Fig CJ_ODU_PCB_006-2). 7) Remove the connector for the DR and reactor (see Fig CJ_ODU_PCB_006-2). 8) Then remove the electronic control board.	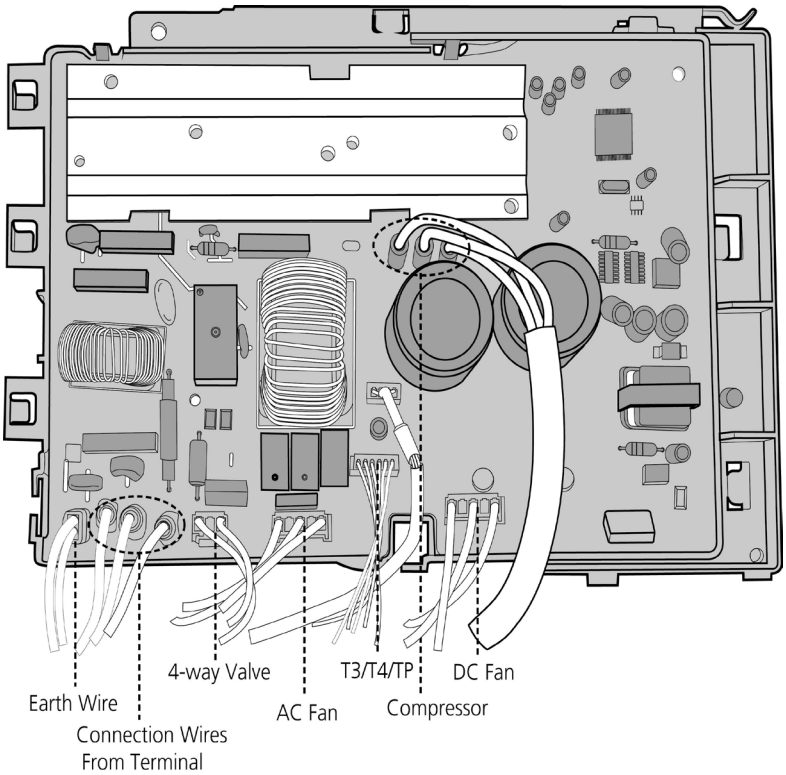 CJ_ODU_PCB_006-2

Note: This section is for reference only. Actual unit appearance may vary.

9. PCB board 7

Procedure	Illustration
1) Remove the screws of the top cover. (1 screws) (see CJ_ODU_PCB_007-1).	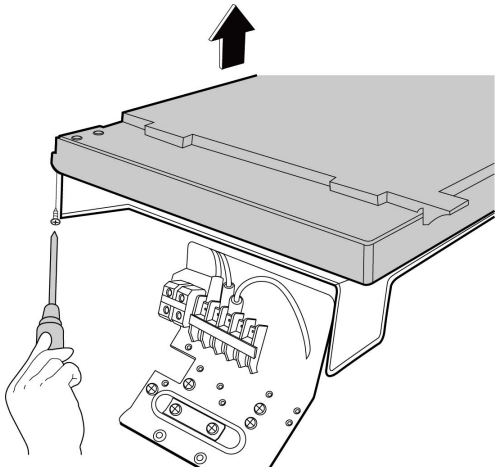 CJ_ODU_PCB_007-1
2) Unfix the hooks and then open the electronic control box cover (5 hooks) (see CJ_ODU_PCB_007-2).	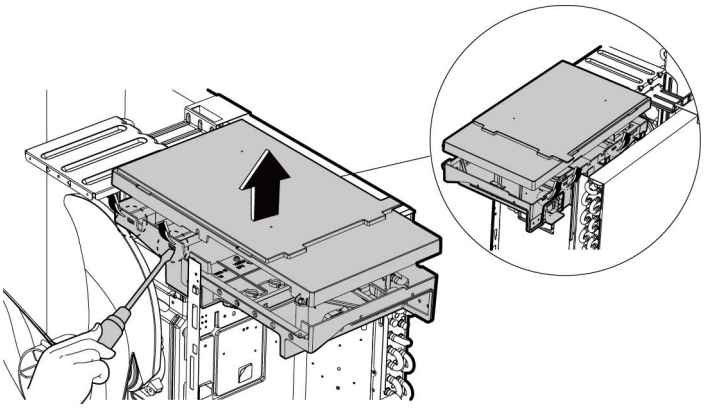 CJ_ODU_PCB_007-2
3) Disconnect the connector for fan motor from the IPM board (see CJ_ODU_PCB_007-3). 4) Remove the connector for the compressor (see CJ_ODU_PCB_007-3).	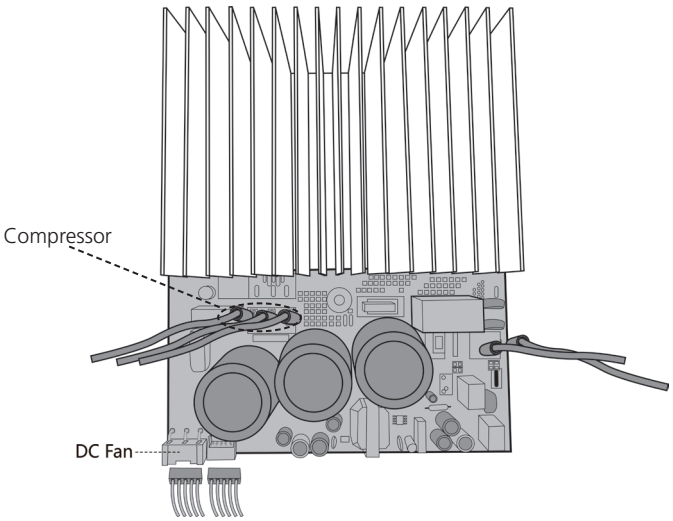 CJ_ODU_PCB_007-3

Note: This section is for reference only. Actual unit appearance may vary.

Procedure	Illustration
5) Pull out the wire connected with the terminal. (see CJ_ODU_PCB_007-4). 6) Pull out connectors of the condenser coil temp. sensor(T3),outdoor ambient temp. sensor(T4) and discharge temp. sensor(TP) (see CJ_ODU_PCB_007-4). 7) Disconnect the electronic expansion valve wire (see Fig CJ_ODU_PCB_007-4). 8) Remove the connector for 4-way valve. (see Fig CJ_ODU_PCB_007-4). 9) Remove the connector for the reactor (see Fig CJ_ODU_PCB_007-4). 10)Then remove the electronic control box (see Fig CJ_ODU_PCB_007-4).	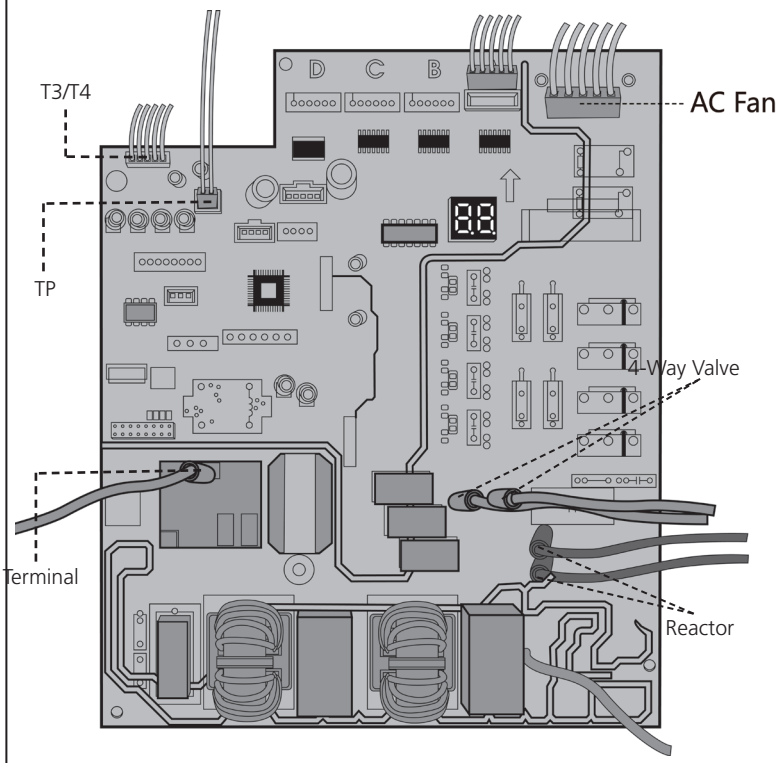 **CJ_ODU_PCB_007-4**

Note: This section is for reference only. Actual unit appearance may vary.

10. PCB board 8

Procedure	Illustration
1) Unfix the hooks and then open the electronic control box cover (4 hooks) (see CJ_ODU_PCB_008-1). 2) Disconnect the connector for outdoor DC fan from the electronic control board (see CJ_ODU_PCB_008-2). 3) Remove the connector for the compressor (see CJ_ODU_PCB_008-2). 4) Pull out the two blue wires connected with the four way valve (see CJ_ODU_PCB_008-2). 5) Pull out connectors of the condenser coil temp. sensor(T3),outdoor ambient temp. sensor(T4) and discharge temp. sensor(TP) (see CJ_ODU_PCB_008-2). 6) Disconnect the electronic expansion valve wire (see Fig CJ_ODU_PCB_008-2). 7) Disconnect the communication wire indoor PCB (see Fig CJ_ODU_PCB_008-2). 8) Disconnect the PFC inductor (see Fig CJ_ODU_PCB_008-2). 9) Then remove the electronic control box (see CJ_ODU_PCB_008-2).	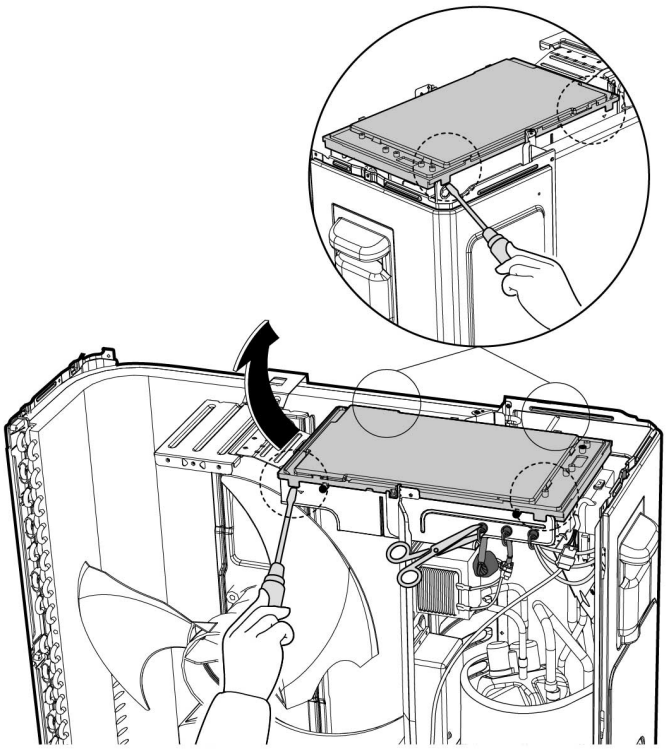 **CJ_ODU_PCB_008-1** 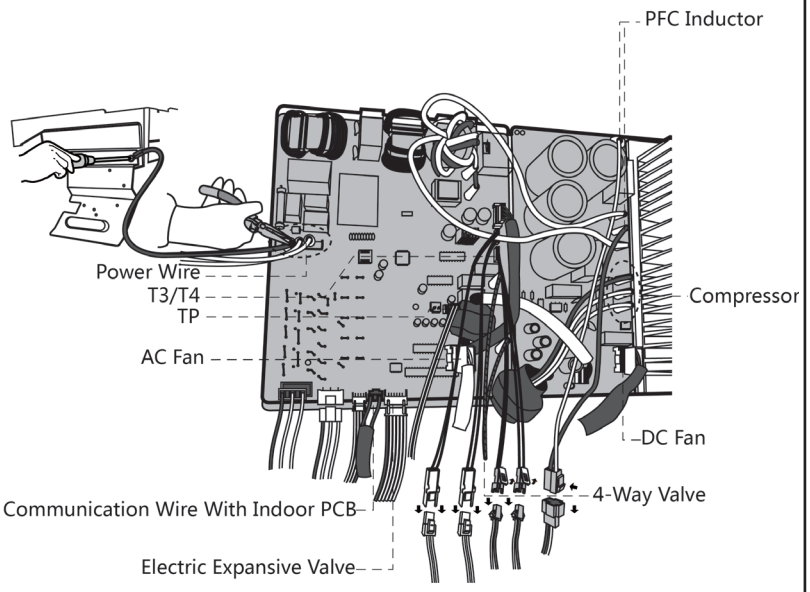 **CJ_ODU_PCB_008-2**

Note: This section is for reference only. Actual unit appearance may vary.

11. PCB board 9

Procedure	Illustration
1) Unfix the hooks and then open the electronic control box cover (4 hooks) (see CJ_ODU_PCB_009-1).	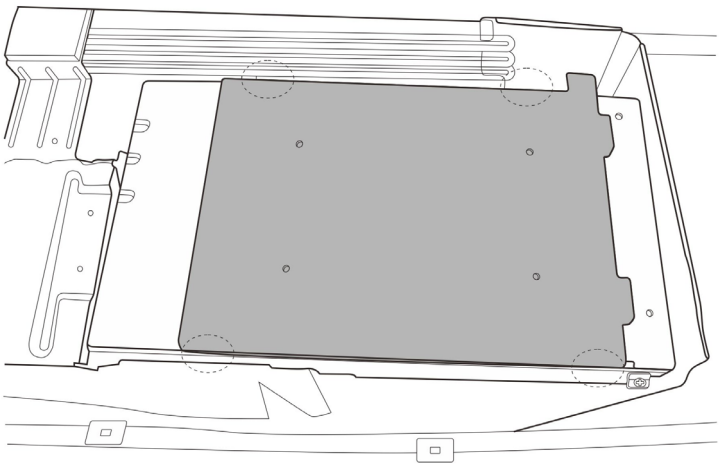 CJ_ODU_PCB_009-1
2) Remove 8 screws on the electronic control board and then turn over the electronic control board (see CJ_ODU_PCB_009-2).	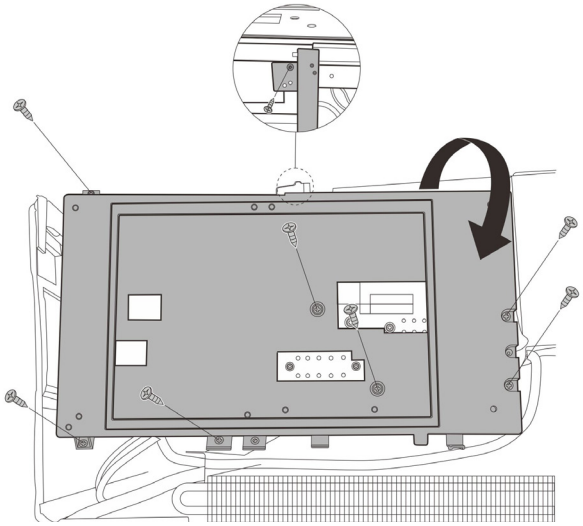 CJ_ODU_PCB_009-2

Note: This section is for reference only. Actual unit appearance may vary.

Procedure	Illustration
3) Pull out the two blue wires connected with the four way valve. (see CJ_ODU_PCB_009-3)(for heat pump models) 4) Pull out connectors of the condenser coil temp. sensor(T3),outdoor ambient temp. sensor(T4) and discharge temp. sensor(TP). (see CJ_ODU_PCB_009-3) 5) Disconnect the electronic expansion valve wire. (see Fig CJ_ODU_ PCB_009-3)(for some models) 6) Remove four screws and unfix the 3 hooks and then remove the main control board. (see CJ_ODU_ PCB_009-3) 7) Disconnect the connector for outdoor DC fan from the IPM board. (see CJ_ODU_PCB_009-3)(for some models) 8) Remove the connector for the compressor. (see CJ_ODU_PCB_009-3) 9) Remove the connector for the PFC Inductor. (see CJ_ODU_PCB_009-3) 10)Pull out 3 connectors between IPM board and main control board.(see CJ_ODU_PCB_009-3) 11)Remove two screws and unfix the 4 hooks and then remove the IPM board. (see CJ_ODU_PCB_009-3)	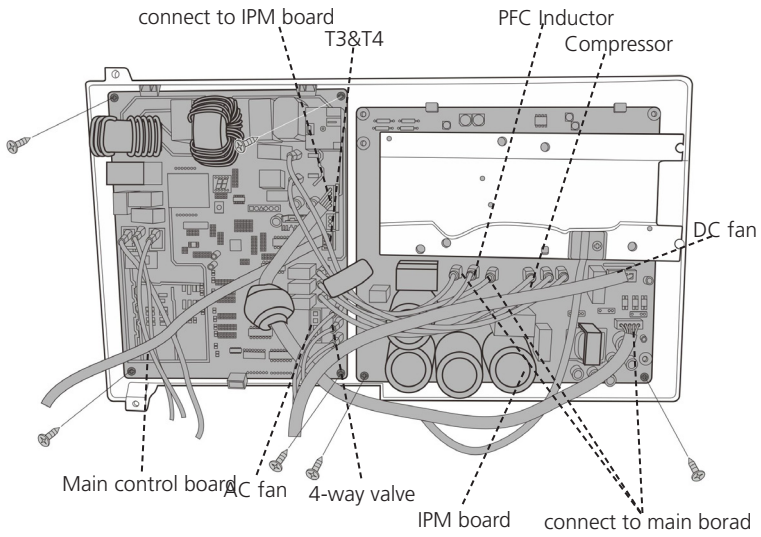 **CJ_ODU_PCB_009-3**

Note: This section is for reference only. Actual unit appearance may vary.

12. PCB board 10

Procedure	Illustration
1) Unfix the hooks and then open the electronic control box cover (4 hooks) (see CJ_ODU_PCB_010-1).	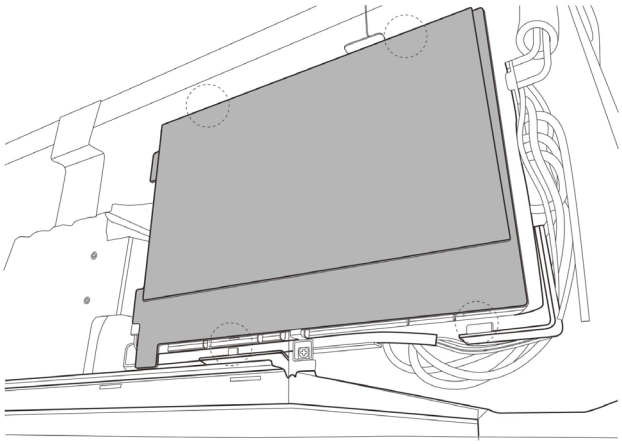 CJ_ODU_PCB_010-1
2) Remove 4 screws on the electronic control board and then turn over the electronic control board (see CJ_ODU_PCB_010-2).	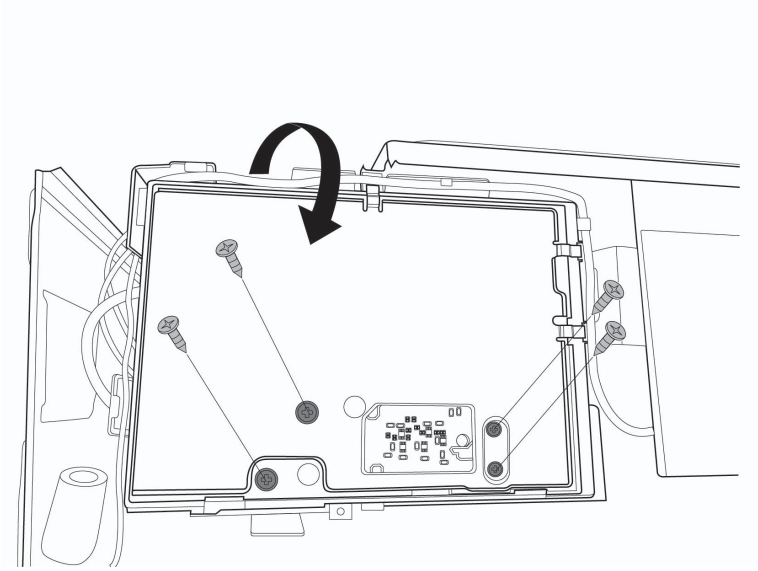 CJ_ODU_PCB_010-2

Note: This section is for reference only. Actual unit appearance may vary.

Procedure	Illustration
3) Pull out the connectors (see CJ_ ODU_PCB_010-3). 4) Remove the 9 screws and unfix the 3 hooks and then remove the electronic control board(see CJ_ ODU_PCB_010-3). 5) Remove two screws and then remove the electronic control box subassembly on partition board assembly. (see CJ_ODU_PCB_010-4).	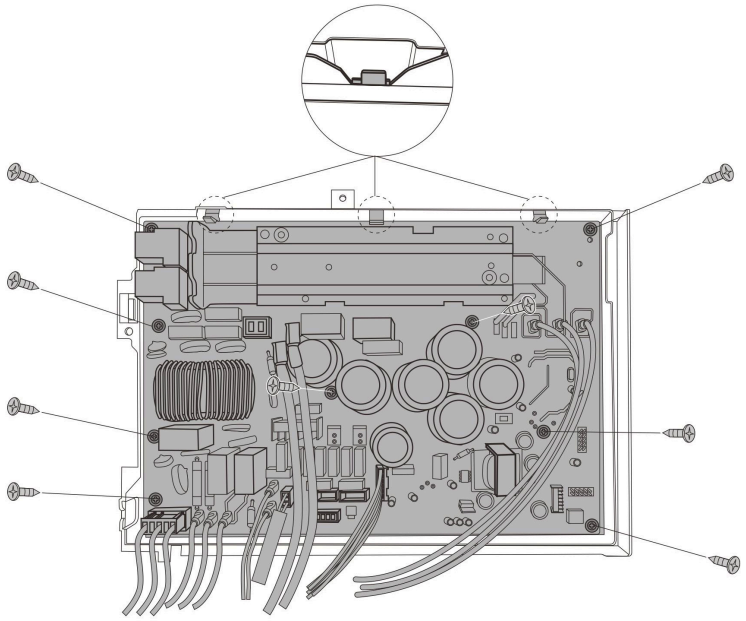 **CJ_ODU_PCB_010-3** 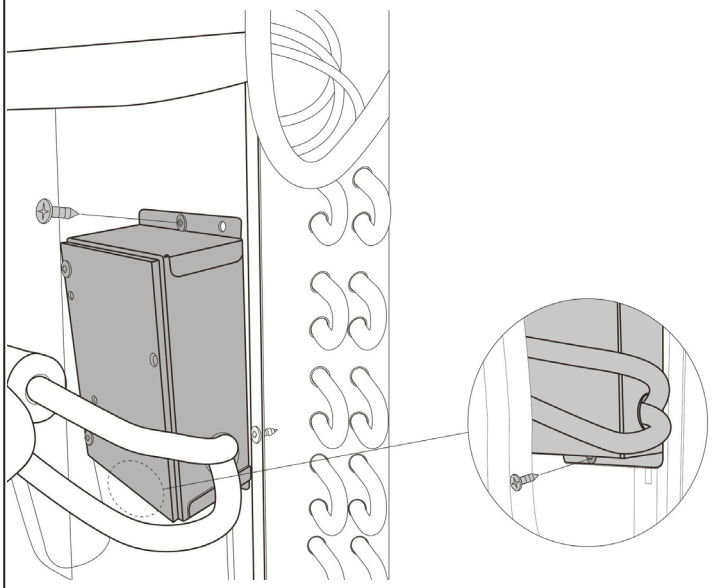 **CJ_ODU_PCB_010-4**

Note: This section is for reference only. Actual unit appearance may vary.

Procedure	Illustration
6) Remove two screws and two connectors and then remove the inverter control board (see CJ_ODU_PCB_010-5).	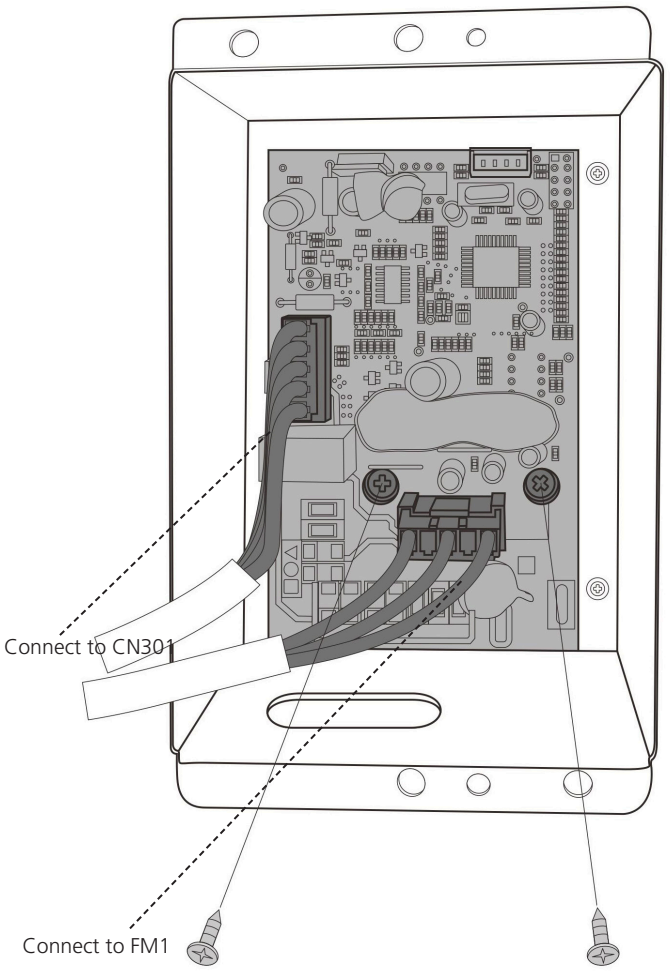 **CJ_ODU_PCB_010-5**

Note: This section is for reference only. Actual unit appearance may vary.

13. PCB board 11

Procedure	Illustration
1) Remove 2 screws to disconnect the power supply wires. (see CJ_ODU_PCB_011-1) 2) Remove 3 screws to disconnect ground wires. (see CJ_ODU_PCB_011-1) 3) Disconnect the wires connected to main control board. (see CJ_ODU_PCB_011-1) 4) Disconnect the wires between main control board and IPM module board. (see CJ_ODU_PCB_011-1) 5) Remove the 4 screws and unfix the 6 hooks and then remove the main control board.(see CJ_ODU_PCB_011-1) 6) Remove 1 screw to remove the fan motor capacitor(1 screw for each capacitor).(see CJ_ODU_PCB_004-1).	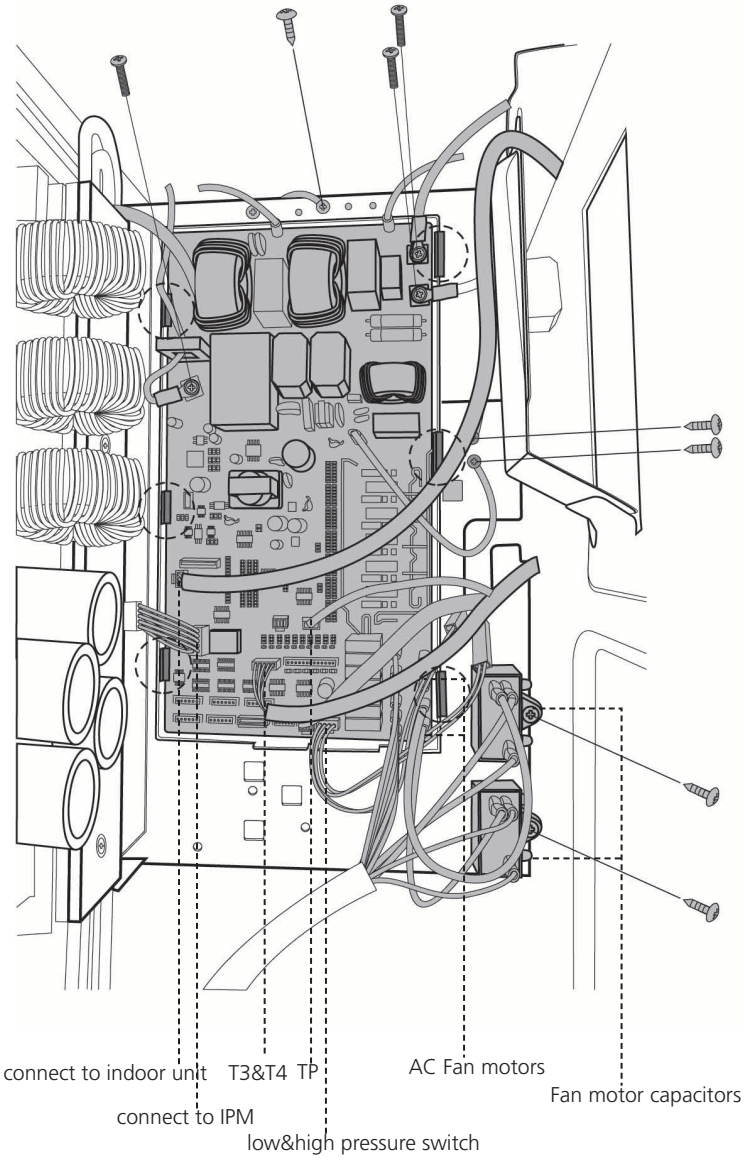 **CJ_ODU_PCB_011-1**

Note: This section is for reference only. Actual unit appearance may vary.

Procedure	Illustration
1) Remove 2 screws to disconnect the power supply wires. (see CJ_ODU_PCB_011-2) 2) Remove 3 screws to disconnect the wires connected to the compressor. (see CJ_ODU_PCB_011-2) 3) Remove 3 screws to remove the radiator.(see CJ_ODU_PCB_011-2) 4) Disconnect the wires between IPM module board and main control board. (see CJ_ODU_PCB_011-2) 5) Remove the 4 screws and unfix the 4 hooks and then remove the IPM moduel board.(see CJ_ODU_PCB_011-2)	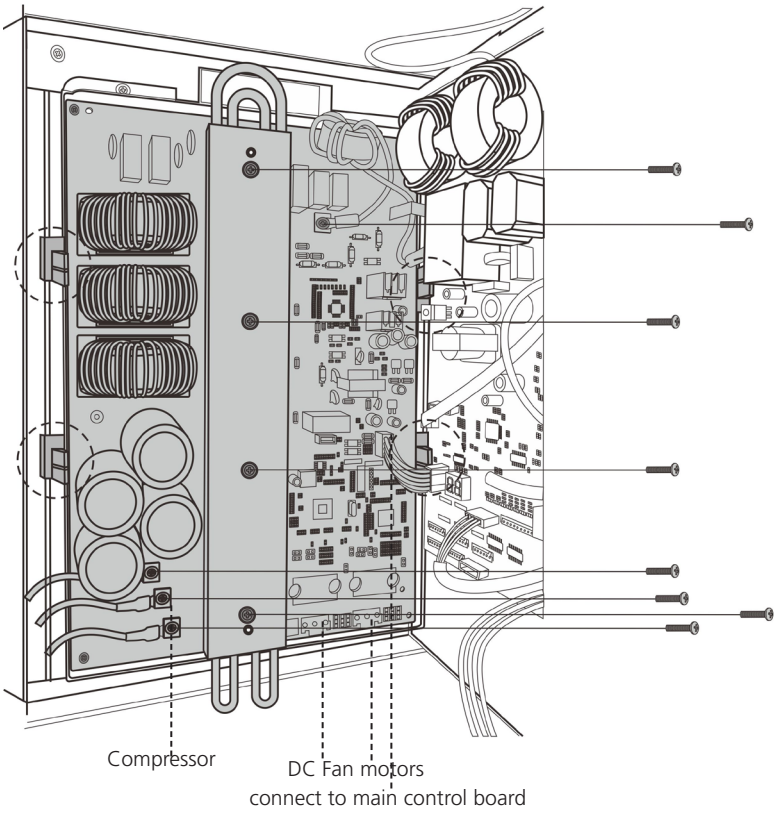 **CJ_ODU_PCB_011-2**

Note: This section is for reference only. Actual unit appearance may vary.

14. PCB board 12

Procedure	Illustration
1) Remove 3 screws to disconnect the wires connected to the compressor. (see CJ_ODU_PCB_012-1) 2) Remove 2 screws to disconnect the power supply wires. (see CJ_ODU_PCB_012-1) 3) Disconnect the wires connected to main control board. (see CJ_ODU_PCB_012-1) 4) Remove the 4 screws and unfix the 6 hooks and then remove the main control board.(see CJ_ODU_PCB_012-1) 5) Remove the screw of the fan capacitor and then remove it (1 screw for each capacitor). (see CJ_ODU_PCB_012-1)	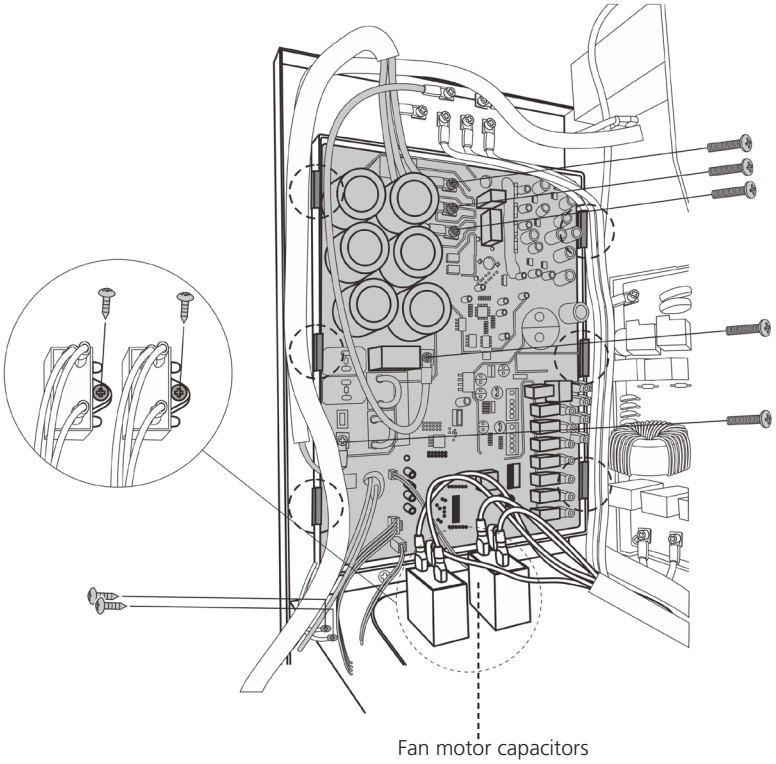 **CJ_ODU_PCB_012-1**

Note: This section is for reference only. Actual unit appearance may vary.

Procedure	Illustration
6) Remove 3 screws to disconnect the power supply wires. (see CJ_ODU_PCB_012-1) 7) Remove 3 screws to disconnect ground wires. (see CJ_ODU_PCB_012-1) 8) Disconnect the wires connected to main control board. (see CJ_ODU_PCB_012-2) 9) Remove the 4 screws and unfix the 4 hooks and then remove the filter board.(see CJ_ODU_PCB_012-2) 10)Remove the 2 screws of the reactor and then remove it . (see CJ_ODU_PCB_012-2)	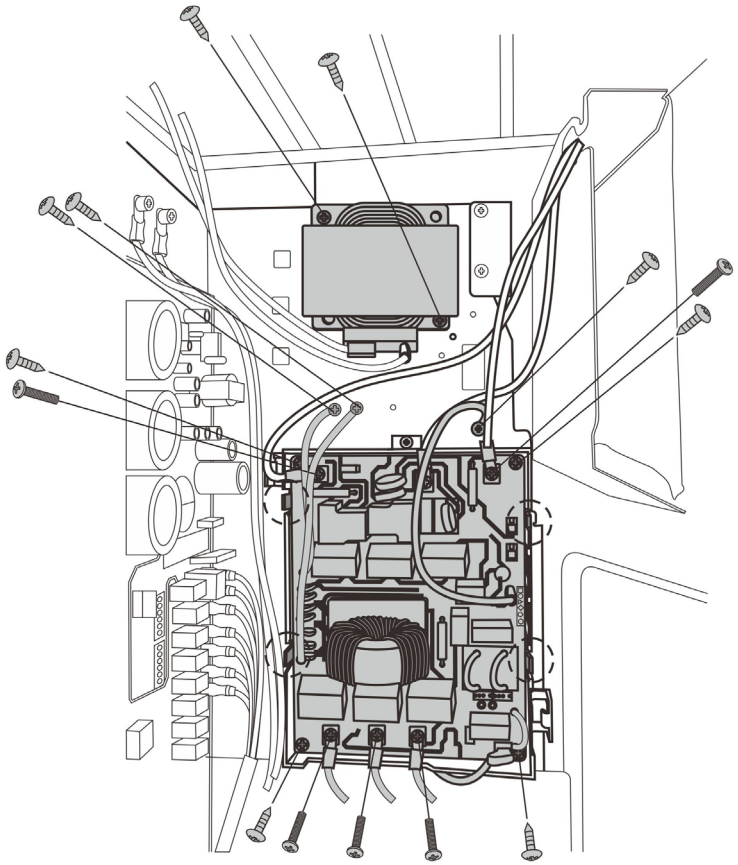 **CJ_ODU_PCB_012-2**
11)Disconnect the wires connected to main control board. (see CJ_ODU_PCB_012-3)(for some models) 12)Remove the 2 screws and then remove the DC motor driver board. (see CJ_ODU_PCB_012-3)(for some models)	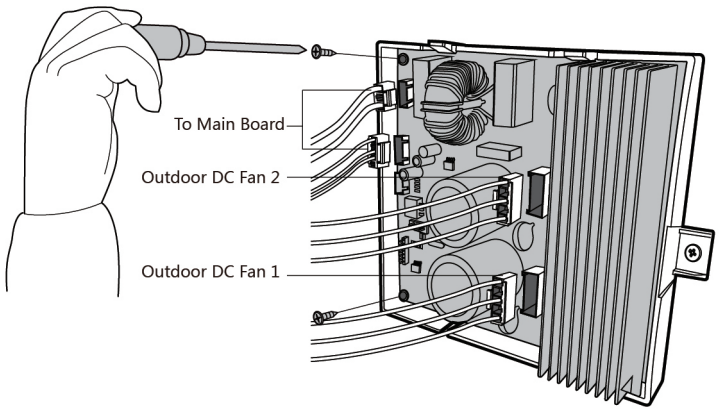 **CJ_ODU_PCB_012-3** **(for some models)**

Note: This section is for reference only. Actual unit appearance may vary.

15. PCB board 13

Procedure	Illustration
1) Unfix the hooks and then open the electronic control box cover (4 hooks) (see CJ_ODU_PCB_013-1).	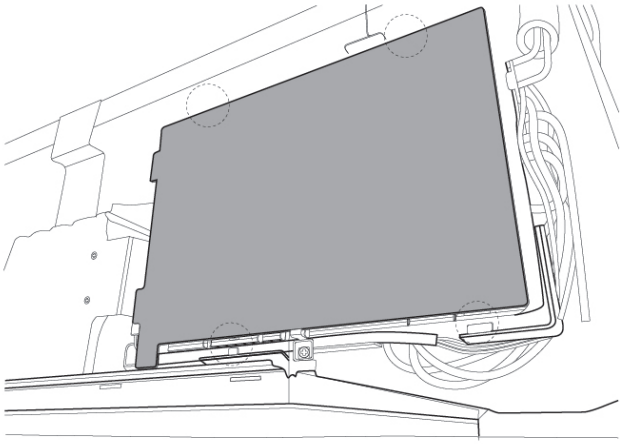 CJ_ODU_PCB_013-1
2) Remove 6 screws on the electronic control board and then turn over the electronic control board (see CJ_ODU_PCB_013-2).	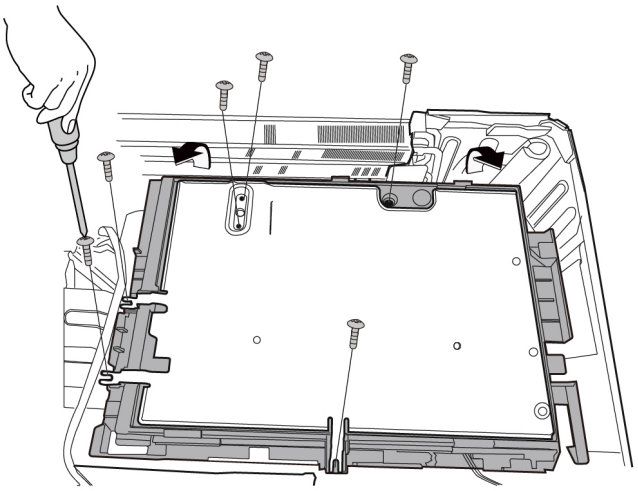 CJ_ODU_PCB_013-2

Note: This section is for reference only. Actual unit appearance may vary.

Procedure	Illustration
3) Pull out the connectors (see CJ_ ODU_PCB_013-3). 4) Remove the 4 screws and then remove the electronic control board(see CJ_ODU_PCB_013-3).	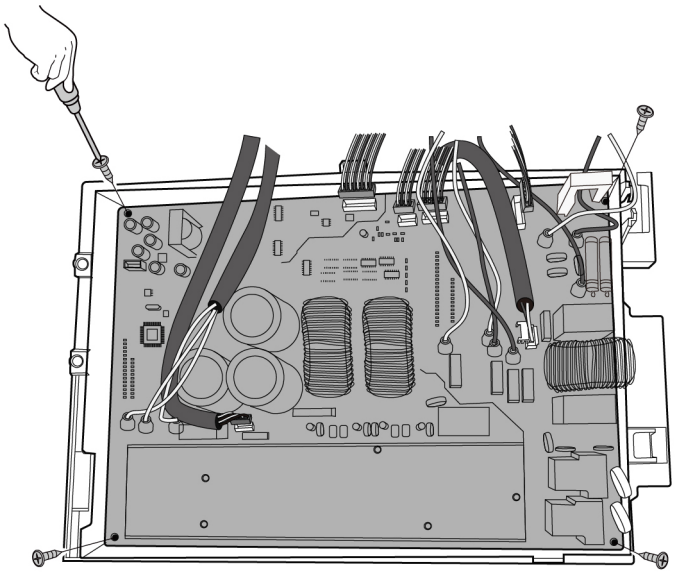 **CJ_ODU_PCB_013-3**
5) Pull out the connector, remove one screw and then remove the key board subassembly on terminal board. (see CJ_ODU_PCB_013-4) (for some units).	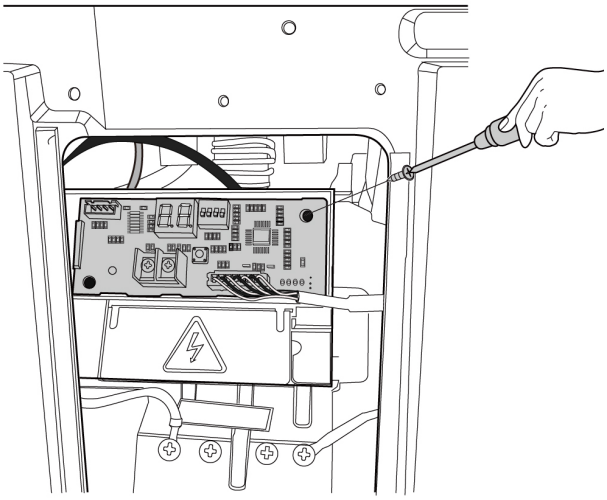 **CJ_ODU_PCB_013-4**

Note: This section is for reference only. Actual unit appearance may vary.

16. PCB board 16

Procedure	Illustration
1) Disconnect the connector for compressor and release the ground wire(1 screw). (see CJ_ODU_PCB_016-1).	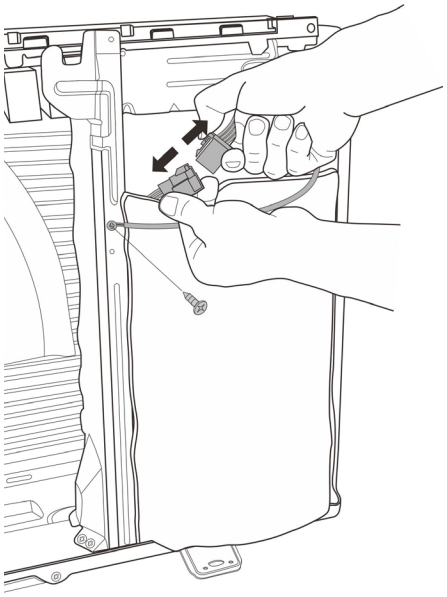 CJ_ODU_PCB_016-1
2) Pull out the wires from electrical supporting plate and turn over the electronic control assembly. (see CJ_ODU_PCB_016-2).	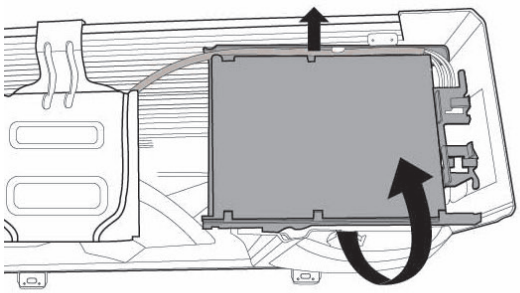 CJ_ODU_PCB_016-2
3) Remove the electronic installing box subassembly (4 hooks) (see CJ_ODU_PCB_016-3).	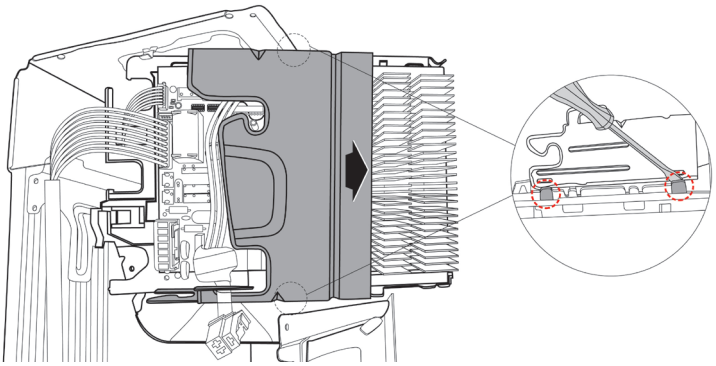 CJ_ODU_PCB_016-3

Note: This section is for reference only. Actual unit appearance may vary.

Procedure	Illustration
4) Remove the fixing board (2 hooks) (see CJ_ODU_PCB_016-4).	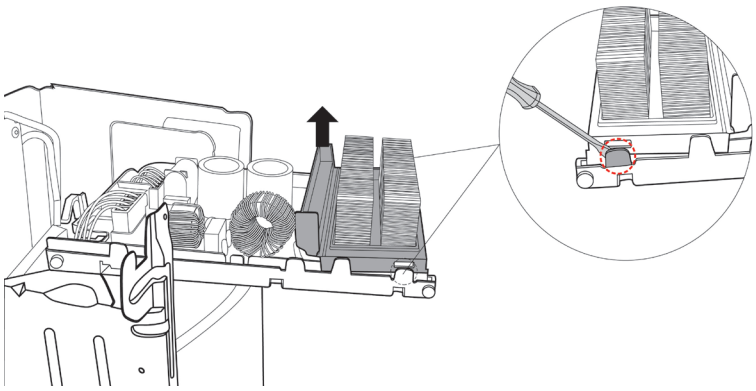 CJ_ODU_PCB_016-4
5) Disconnect the connectors from the electronic control board (see CJ_ODU_PCB_016-5).	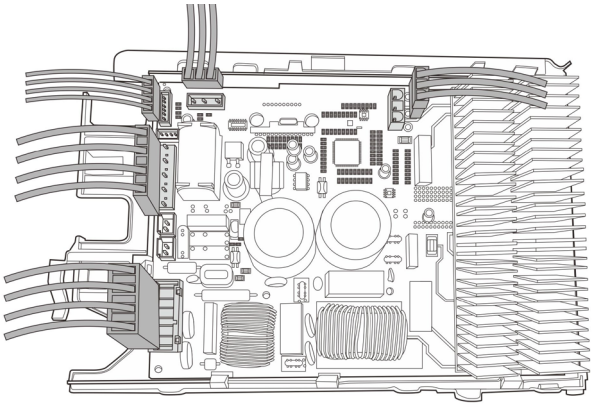 CJ_ODU_PCB_016-5
6) Then remove the electronic control board (4 hooks).(see CJ_ODU_PCB_016-6).	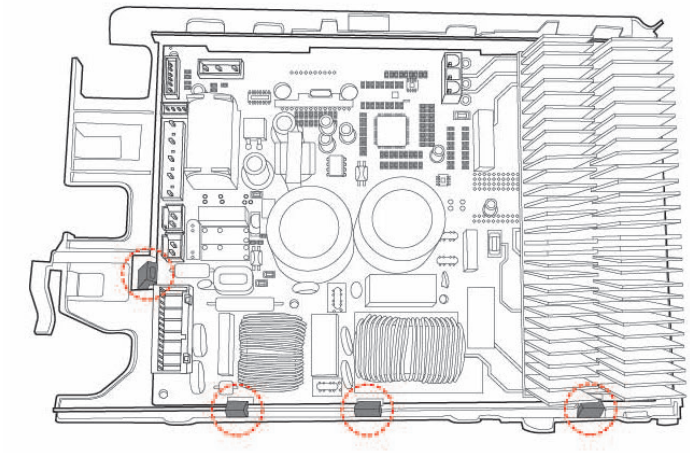 CJ_ODU_PCB_016-6

Note: This section is for reference only. Actual unit appearance may vary.

17. PCB board 17

Procedure	Illustration
1) Pull out the connectors (see CJ_ ODU_PCB_017-1). 2) Remove the 9 screws and unfix the 3 hooks and then remove the electronic control board(see CJ_ ODU_PCB_017-2).	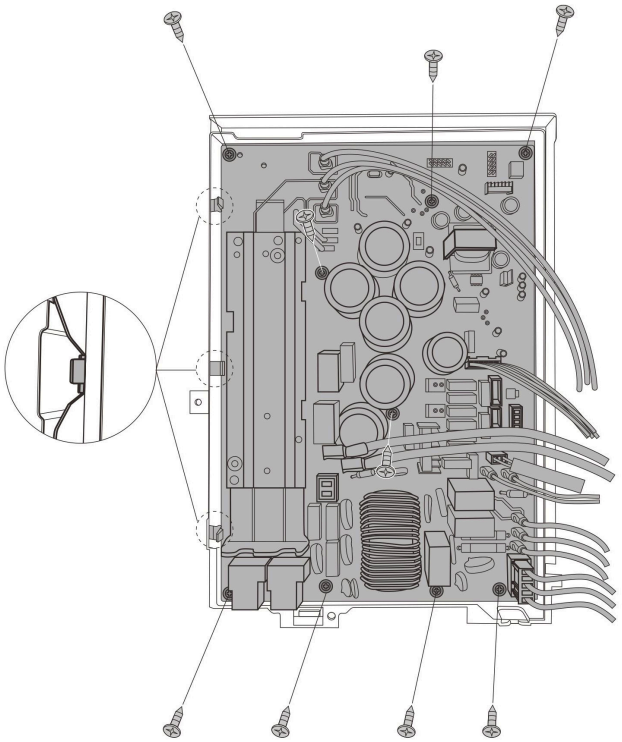 **CJ_ODU_PCB_017-1**
3) Disconnect the wires connected to main control board. (see CJ_ODU_ PCB_017-2)(for some models) 4) Remove the 2 screws and then remove the DC motor driver board. (see CJ_ODU_PCB_017-2)(for some models)	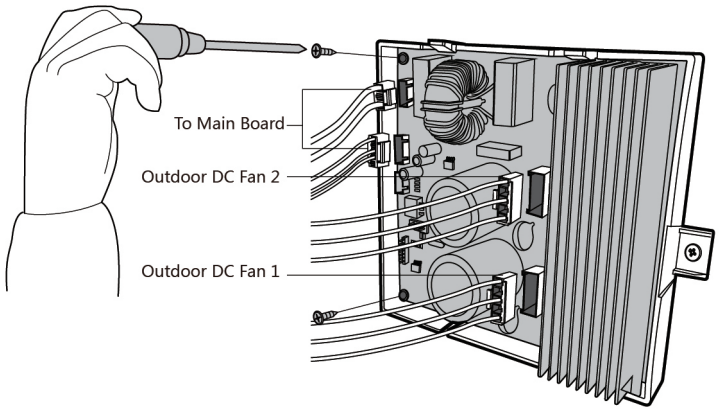 **CJ_ODU_PCB_017-2 (for some models)**

Note: This section is for reference only. Actual unit appearance may vary.

2.3 Fan Assembly

Note: Remove the panel plate (refer to 3.1 Panel Plate) before disassembling fan.

Procedure	Illustration
1) Remove the nut securing the fan with a spanner (see CJ_ODU_FAN_001-1&2). 2) Remove the fan.	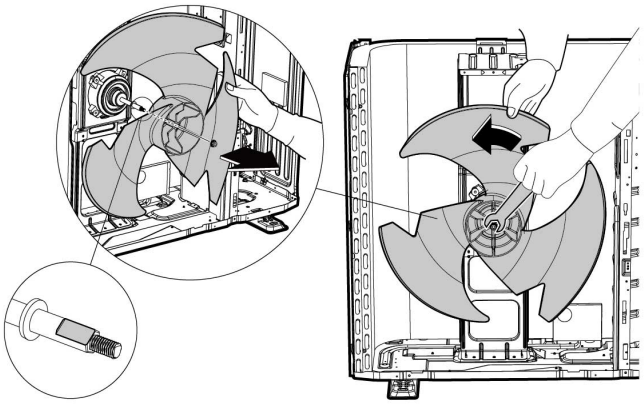 **CJ_ODU_FAN_001-1** 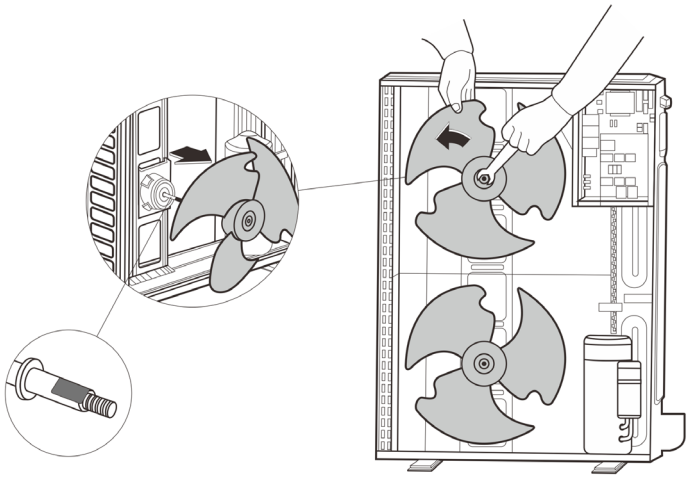 **CJ_ODU_FAN_001-2**

Note: This section is for reference only. Actual unit appearance may vary.

2.4 Fan Motor

Note: Remove the panel plate and the connection of fan motor on PCB (refer to 3.1 Panel Plate and 3.2 Electrical parts) before disassembling fan motor.

Procedure	Illustration
3) Remove the fixing screws of the fan motor (4 screws) (see CJ_ODU_MOTOR_001). 4) Remove the fan motor.	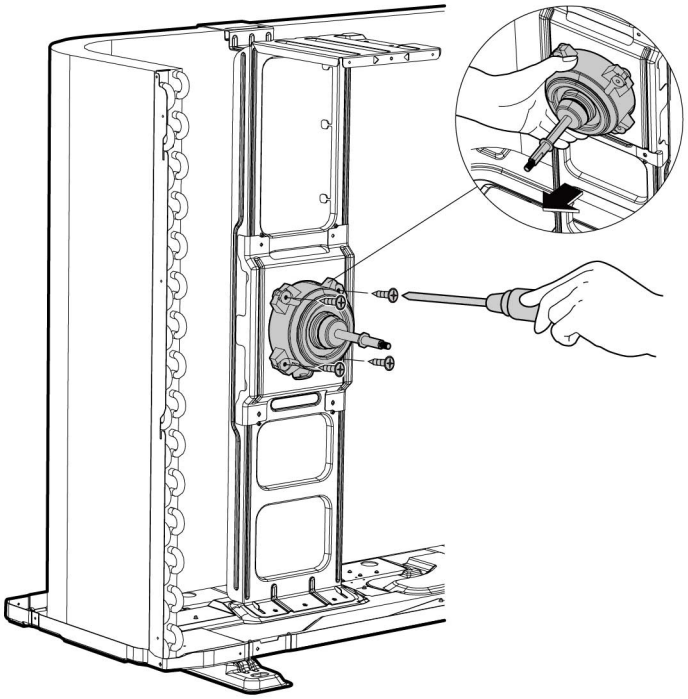 **CJ_ODU_MOTOR_001**

Note: This section is for reference only. Actual unit appearance may vary.

2.5 Sound blanket

Note: Remove the panel plate (refer to 3.1 Panel plate) before disassembling sound blanket.

Procedure	Illustration
1) Remove the sound blanket (side and top) (see CJ_ODU_BLANKET_001).	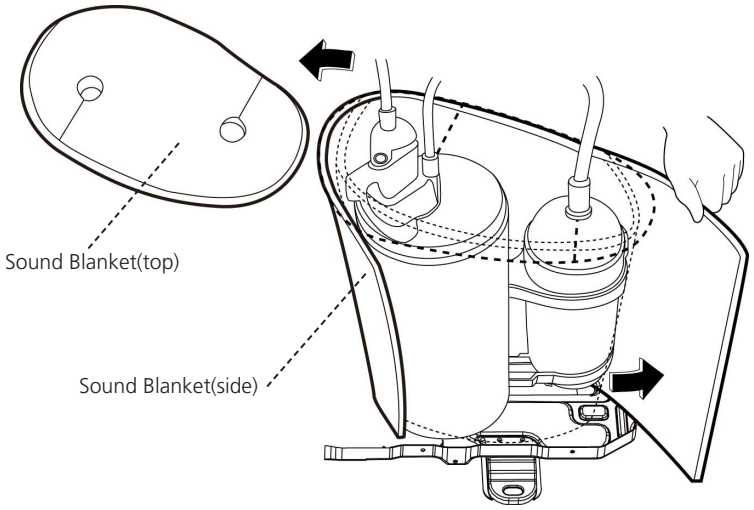 **CJ_ODU_BLANKET_001**

Note: This section is for reference only. Actual unit appearance may vary.

2.6 Four-way valve (for heat pump models)

WARNING: Evacuate the system and confirm that there is no refrigerant left in the system before removing the four-way valve and the compressor. (For R32 & R290, you should evacuate the system with the vacuum pump; flush the system with nitrogen; then repeat the two steps before heating up the brazed parts. The operations above should be implemented by professionals.)

Note: Remove the panel plate, connection of four-way valve on PCB (refer to 3.1 Panel plate and 3.2 Electrical parts) before disassembling sound blanket.

Procedure	Illustration
1) Heat up the brazed parts and then detach the the four-way valve and the pipe (see CJ_ODU_VALVE_001). 2) Remove the four-way valve assembly with pliers.	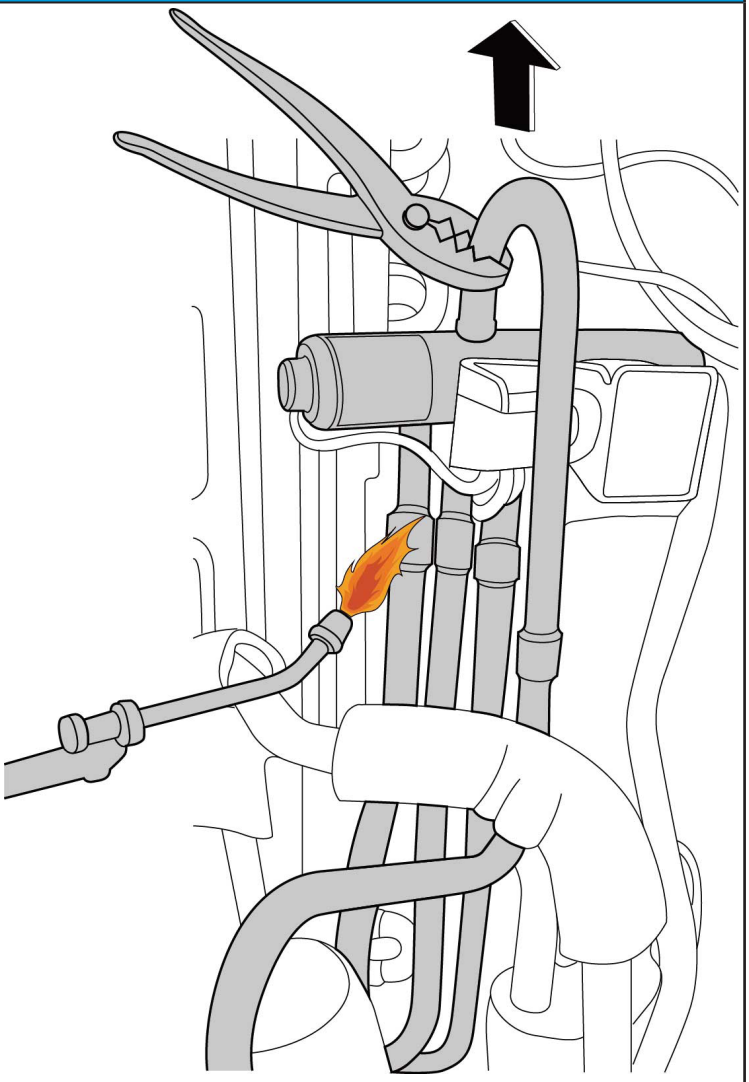

CJ_ODU_VALVE_001

Note: This section is for reference only. Actual unit appearance may vary.

2.7 Compressor

WARNING: Evacuate the system and confirm that there is no refrigerant left in the system before removing the four-way valve and the compressor. (For R32 & R290, you should evacuate the system with the vacuum pump; flush the system with nitrogen; then repeat the two steps before heating up the brazed parts. The operations above should be implemented by professionals.)

Note: Remove the panel plate, connection of compressor on PCB (refer to 3.1 Panel plate and 3.2 Electrical parts) before disassembling sound blanket.

Procedure	Illustration
1) Remove the flange nut of terminal cover and remove the terminal cover (see CJ_ ODU_COMP_001).	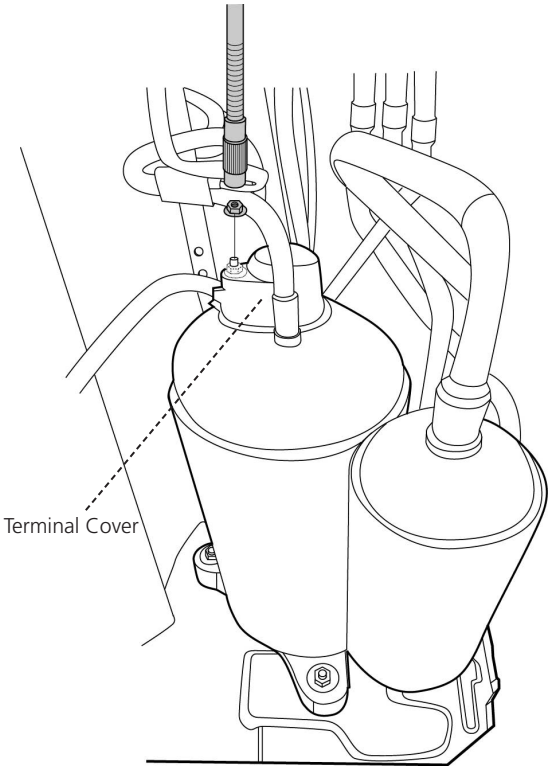 CJ_ODU_COMP_001
2) Disconnect the connectors (see CJ_ODU_ COMP_002).	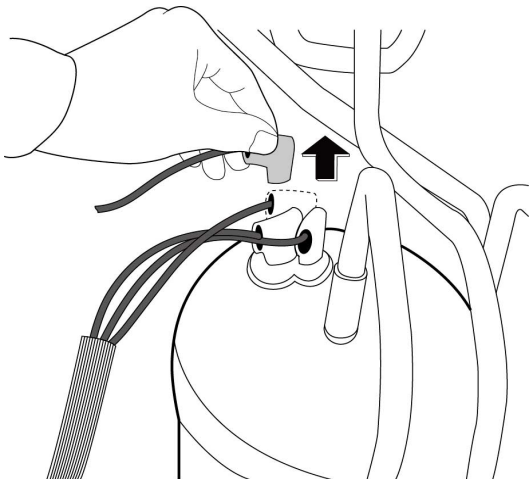 CJ_ODU_COMP_002

Note: This section is for reference only. Actual unit appearance may vary.

Procedure	Illustration
3) Remove the hex nuts and washers securing the compressor, located on the bottom plate (see CJ_ODU_COMP_003).	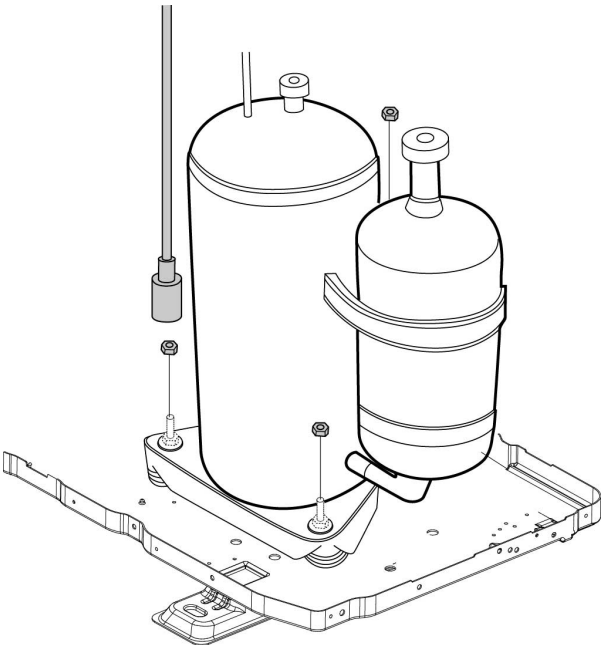 CJ_ODU_COMP_003
4) Heat up the brazed parts and then remove the the discharge pipe and the suction pipe (see CJ_ODU_COMP_004). 5) Lift the compressor from the base pan assembly with pliers.	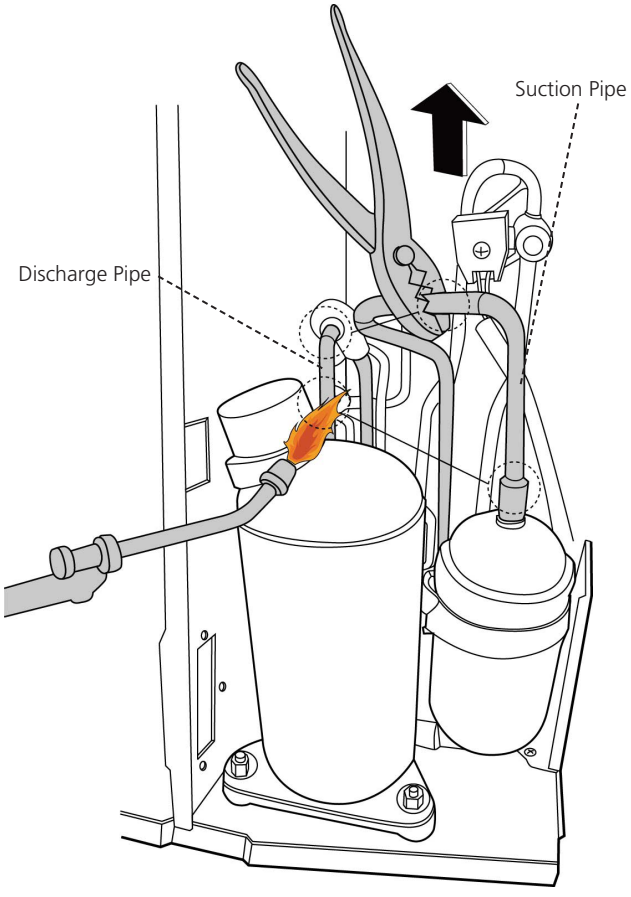 CJ_ODU_COMP_004

Note: This section is for reference only. Actual unit appearance may vary.

Appendix

Contents

i) Temperature Sensor Resistance Value Table for T1, T2, T3, and T4 (°C – K) 2

ii) Temperature Sensor Resistance Value Table for TP (for some units)(°C --K) 3

iii) Pressure On Service Port 4

i) Temperature Sensor Resistance Value Table for T1,T2,T3 and T4 (°C – K)

°C	°F	K Ohm	°C	°F	K Ohm	°C	°F	K Ohm	°C	°F	K Ohm
-20	-4	115.266	20	68	12.6431	60	140	2.35774	100	212	0.62973
-19	-2	108.146	21	70	12.0561	61	142	2.27249	101	214	0.61148
-18	0	101.517	22	72	11.5	62	144	2.19073	102	216	0.59386
-17	1	96.3423	23	73	10.9731	63	145	2.11241	103	217	0.57683
-16	3	89.5865	24	75	10.4736	64	147	2.03732	104	219	0.56038
-15	5	84.219	25	77	10	65	149	1.96532	105	221	0.54448
-14	7	79.311	26	79	9.55074	66	151	1.89627	106	223	0.52912
-13	9	74.536	27	81	9.12445	67	153	1.83003	107	225	0.51426
-12	10	70.1698	28	82	8.71983	68	154	1.76647	108	226	0.49989
-11	12	66.0898	29	84	8.33566	69	156	1.70547	109	228	0.486
-10	14	62.2756	30	86	7.97078	70	158	1.64691	110	230	0.47256
-9	16	58.7079	31	88	7.62411	71	160	1.59068	111	232	0.45957
-8	18	56.3694	32	90	7.29464	72	162	1.53668	112	234	0.44699
-7	19	52.2438	33	91	6.98142	73	163	1.48481	113	235	0.43482
-6	21	49.3161	34	93	6.68355	74	165	1.43498	114	237	0.42304
-5	23	46.5725	35	95	6.40021	75	167	1.38703	115	239	0.41164
-4	25	44	36	97	6.13059	76	169	1.34105	116	241	0.4006
-3	27	41.5878	37	99	5.87359	77	171	1.29078	117	243	0.38991
-2	28	39.8239	38	100	5.62961	78	172	1.25423	118	244	0.37956
-1	30	37.1988	39	102	5.39689	79	174	1.2133	119	246	0.36954
0	32	35.2024	40	104	5.17519	80	176	1.17393	120	248	0.35982
1	34	33.3269	41	106	4.96392	81	178	1.13604	121	250	0.35042
2	36	31.5635	42	108	4.76253	82	180	1.09958	122	252	0.3413
3	37	29.9058	43	109	4.5705	83	181	1.06448	123	253	0.33246
4	39	28.3459	44	111	4.38736	84	183	1.03069	124	255	0.3239
5	41	26.8778	45	113	4.21263	85	185	0.99815	125	257	0.31559
6	43	25.4954	46	115	4.04589	86	187	0.96681	126	259	0.30754
7	45	24.1932	47	117	3.88673	87	189	0.93662	127	261	0.29974
8	46	22.5662	48	118	3.73476	88	190	0.90753	128	262	0.29216
9	48	21.8094	49	120	3.58962	89	192	0.8795	129	264	0.28482
10	50	20.7184	50	122	3.45097	90	194	0.85248	130	266	0.2777
11	52	19.6891	51	124	3.31847	91	196	0.82643	131	268	0.27078
12	54	18.7177	52	126	3.19183	92	198	0.80132	132	270	0.26408
13	55	17.8005	53	127	3.07075	93	199	0.77709	133	271	0.25757
14	57	16.9341	54	129	2.95896	94	201	0.75373	134	273	0.25125
15	59	16.1156	55	131	2.84421	95	203	0.73119	135	275	0.24512
16	61	15.3418	56	133	2.73823	96	205	0.70944	136	277	0.23916
17	63	14.6181	57	135	2.63682	97	207	0.68844	137	279	0.23338
18	64	13.918	58	136	2.53973	98	208	0.66818	138	280	0.22776
19	66	13.2631	59	138	2.44677	99	210	0.64862	139	282	0.22231

ii) Temperature Sensor Resistance Value Table for TP(for some units) (°C --K)

°C	°F	K Ohm	°C	°F	K Ohm	°C	°F	K Ohm	°C	°F	K Ohm
°C	°F	K Ohm	°C	°F	K Ohm	°C	°F	K Ohm	°C	°F	K Ohm
-20	-4	542.7	20	68	68.66	60	140	13.59	100	212	3.702
-19	-2	511.9	21	70	65.62	61	142	13.11	101	214	3.595
-18	0	483	22	72	62.73	62	144	12.65	102	216	3.492
-17	1	455.9	23	73	59.98	63	145	12.21	103	217	3.392
-16	3	430.5	24	75	57.37	64	147	11.79	104	219	3.296
-15	5	406.7	25	77	54.89	65	149	11.38	105	221	3.203
-14	7	384.3	26	79	52.53	66	151	10.99	106	223	3.113
-13	9	363.3	27	81	50.28	67	153	10.61	107	225	3.025
-12	10	343.6	28	82	48.14	68	154	10.25	108	226	2.941
-11	12	325.1	29	84	46.11	69	156	9.902	109	228	2.86
-10	14	307.7	30	86	44.17	70	158	9.569	110	230	2.781
-9	16	291.3	31	88	42.33	71	160	9.248	111	232	2.704
-8	18	275.9	32	90	40.57	72	162	8.94	112	234	2.63
-7	19	261.4	33	91	38.89	73	163	8.643	113	235	2.559
-6	21	247.8	34	93	37.3	74	165	8.358	114	237	2.489
-5	23	234.9	35	95	35.78	75	167	8.084	115	239	2.422
-4	25	222.8	36	97	34.32	76	169	7.82	116	241	2.357
-3	27	211.4	37	99	32.94	77	171	7.566	117	243	2.294
-2	28	200.7	38	100	31.62	78	172	7.321	118	244	2.233
-1	30	190.5	39	102	30.36	79	174	7.086	119	246	2.174
0	32	180.9	40	104	29.15	80	176	6.859	120	248	2.117
1	34	171.9	41	106	28	81	178	6.641	121	250	2.061
2	36	163.3	42	108	26.9	82	180	6.43	122	252	2.007
3	37	155.2	43	109	25.86	83	181	6.228	123	253	1.955
4	39	147.6	44	111	24.85	84	183	6.033	124	255	1.905
5	41	140.4	45	113	23.89	85	185	5.844	125	257	1.856
6	43	133.5	46	115	22.89	86	187	5.663	126	259	1.808
7	45	127.1	47	117	22.1	87	189	5.488	127	261	1.762
8	46	121	48	118	21.26	88	190	5.32	128	262	1.717
9	48	115.2	49	120	20.46	89	192	5.157	129	264	1.674
10	50	109.8	50	122	19.69	90	194	5	130	266	1.632
11	52	104.6	51	124	18.96	91	196	4.849			
12	54	99.69	52	126	18.26	92	198	4.703			
13	55	95.05	53	127	17.58	93	199	4.562			
14	57	90.66	54	129	16.94	94	201	4.426			
15	59	86.49	55	131	16.32	95	203	4.294			
16	61	82.54	56	133	15.73	96	205	4.167			
17	63	78.79	57	135	15.16	97	207	4.045			
18	64	75.24	58	136	14.62	98	208	3.927			
19	66	71.86	59	138	14.09	99	210	3.812			

iii) Pressure On Service Port

Cooling chart(R410A):

°F(°C)	ODU(DB) / IDU(DB/WB)	0(-17)	5(-15)	15 (-9.44)	45 (7.22)	75 (23.89)	85 (29.44)	95 (35)	105 (40.56)	115 (46.11)	120 (48.89)
BAR	70/59 (21.11/15)	6.4	6.5	7.3	8.0	8.2	7.8	8.1	8.6	10.1	10.6
	75/63 (23.89/17.22)	6.7	6.8	7.9	8.6	8.6	8.3	8.7	9.1	10.7	11.2
	80/67 (26.67/19.44)	7.1	7.2	8.5	9.5	9.3	8.9	9.1	9.6	11.2	11.9
	90/73 (32.22/22.78)	7.7	7.8	9.6	10.5	10.3	9.5	10.0	10.6	12.4	13.0
PSI	70/59 (21.11/15)	93	94	106	116	119	113	117	125	147	154
	75/63 (23.89/17.22)	97	99	115	125	124	120	126	132	155	162
	80/67 (26.67/19.44)	103	104	123	138	135	129	132	140	162	173
	90/73 (32.22/22.78)	112	113	139	152	149	138	145	154	180	189
MPa	70/59 (21.11/15)	0.64	0.65	0.73	0.8	0.82	0.78	0.81	0.86	1.01	1.06
	75/63 (23.89/17.22)	0.67	0.68	0.79	0.86	0.86	0.83	0.87	0.91	1.07	1.12
	80/67 (26.67/19.44)	0.71	0.72	0.85	0.95	0.93	0.89	0.91	0.96	1.12	1.19
	90/73 (32.22/22.78)	0.77	0.78	0.96	1.05	1.03	0.95	1	1.06	1.24	1.3

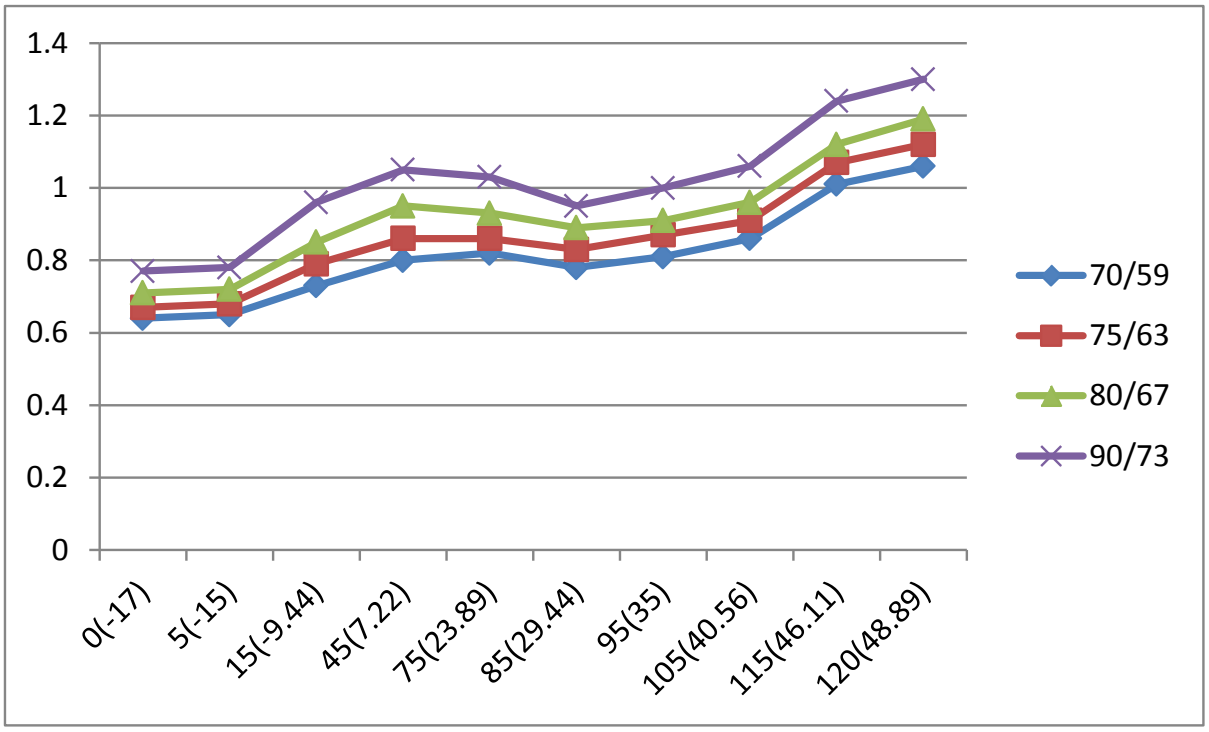

Heating chart(R410A):

°F(°C)	QDU(DB/WB) / IDU(DB)	57/53 (13.89/11.67)	47/43 (8.33/6.11)	37/33 (2.78/0.56)	27/23 (-2.78/-5)	17/13 (-8.33/-10.56)	0/-2 (-17/-19)	-17/-18 (-27/-28)
BAR	55(12.78)	30.3	28.5	25.3	22.8	20.8	18.5	16.5
	65(18.33)	32.5	30.0	26.6	25.4	23.3	20.5	19.0
	75(23.89)	33.8	31.5	27.8	26.3	24.9	21.5	20.0
PSI	55(12.78)	439	413	367	330	302	268	239
	65(18.33)	471	435	386	368	339	297	276
	75(23.89)	489	457	403	381	362	312	290
MPa	55(12.78)	3.03	2.85	2.53	2.28	2.08	1.85	1.65
	65(18.33)	3.25	3.00	2.66	2.54	2.33	2.05	1.90
	75(23.89)	3.38	3.15	2.78	2.63	2.49	2.15	2.00

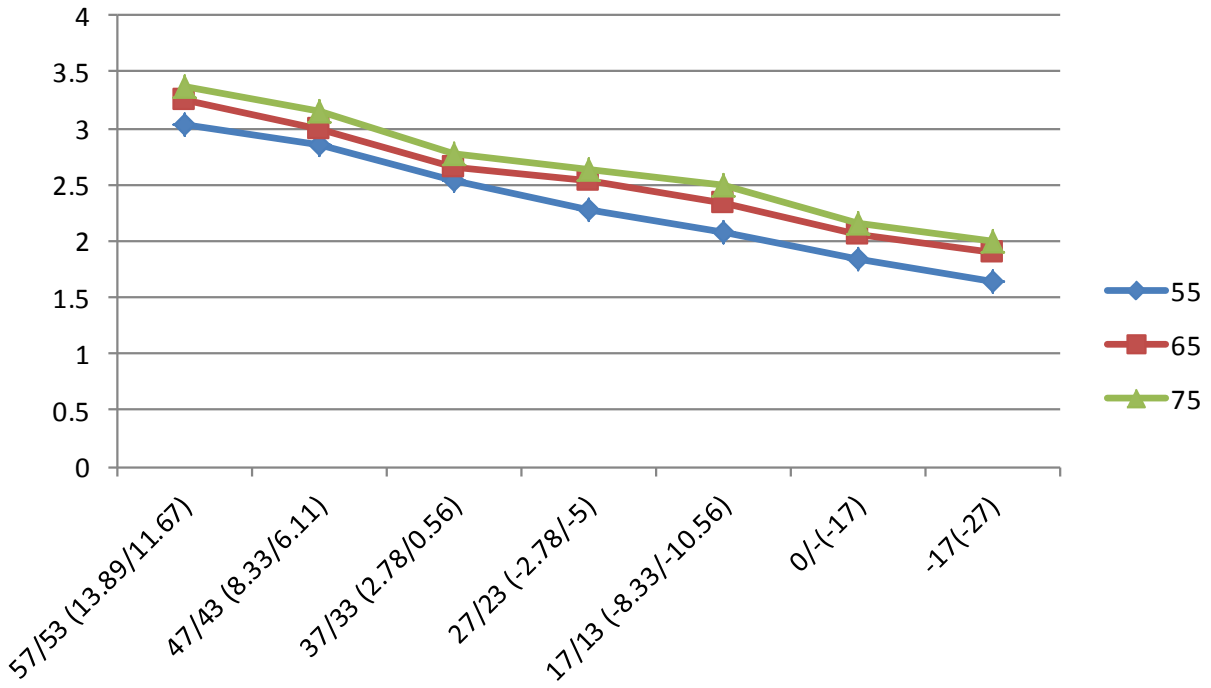

Cooling chart(R22):

°F(°C)	ODU(DB) / IDU(DB/WB)	0(-17)	5(-15)	15 (-9.44)	45 (7.22)	75 (23.89)	85 (29.44)	95 (35)	105 (40.56)	115 (46.11)	120 (48.89)
BAR	70/59 (21.11/15)	4.0	4.1	4.6	5.0	5.1	4.9	5.1	5.4	6.3	6.6
	75/63 (23.89/17.22)	4.2	4.3	4.9	5.4	5.4	5.2	5.4	5.7	6.7	7.0
	80/67 (26.67/19.44)	4.4	4.5	5.3	5.9	5.8	5.6	5.7	6.0	7.0	7.4
	90/73 (32.22/22.78)	4.8	4.9	6.0	6.6	6.4	5.9	6.3	6.6	7.8	8.1
PSI	70/59 (21.11/15)	58	59	67	73	74	71	74	78	91	96
	75/63 (23.89/17.22)	61	62	71	78	78	75	78	83	97	102
	80/67 (26.67/19.44)	64	65	77	86	84	81	83	87	102	107
	90/73 (32.22/22.78)	70	71	87	96	93	86	91	96	113	117
MPa	70/59 (21.11/15)	0.40	0.41	0.46	0.50	0.51	0.49	0.51	0.54	0.63	0.66
	75/63 (23.89/17.22)	0.42	0.43	0.49	0.54	0.54	0.52	0.54	0.57	0.67	0.70
	80/67 (26.67/19.44)	0.44	0.45	0.53	0.59	0.58	0.56	0.57	0.60	0.70	0.74
	90/73 (32.22/22.78)	0.48	0.49	0.60	0.66	0.64	0.59	0.63	0.66	0.78	0.81

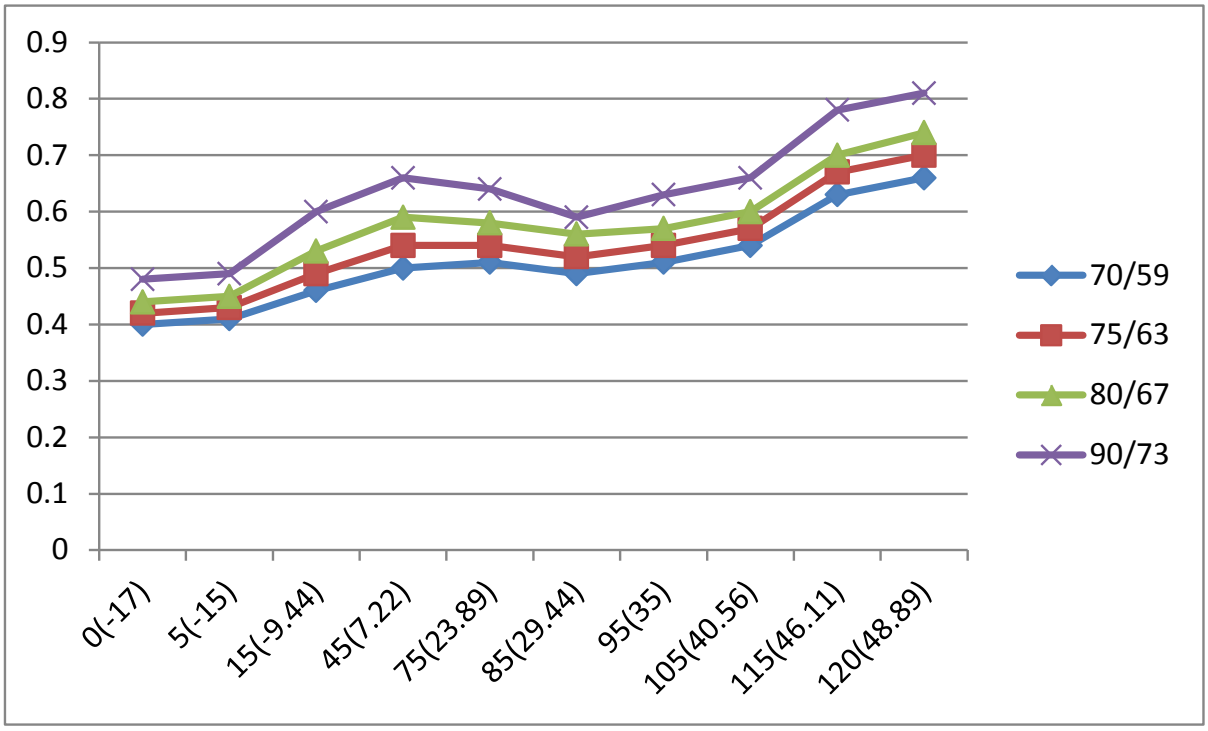

Heating chart(R22):

°F(°C)	QDU(DB/WB) / IDU(DB)	57/53 (13.89/11.67)	47/43 (8.33/6.11)	37/33 (2.78/0.56)	27/23 (-2.78/-5)	17/13 (-8.33/-10.56)	0/-2 (-17/-19)	-17/-18 (-27/-28)
BAR	55(12.78)	18.9	17.8	15.8	14.3	13.0	11.6	10.3
	65(18.33)	20.3	18.8	16.6	15.9	14.6	12.8	11.9
	75(23.89)	21.1	19.7	17.3	16.4	15.6	13.4	12.5
PSI	55(12.78)	274	258	229	207	189	168	149
	65(18.33)	294	273	241	231	212	186	172.6
	75(23.89)	306	286	251	238	226	194	181
MPa	55(12.78)	1.89	1.78	1.58	1.43	1.30	1.16	1.03
	65(18.33)	2.03	1.88	1.66	1.59	1.46	1.28	1.19
	75(23.89)	2.11	1.97	1.73	1.64	1.56	1.34	1.25

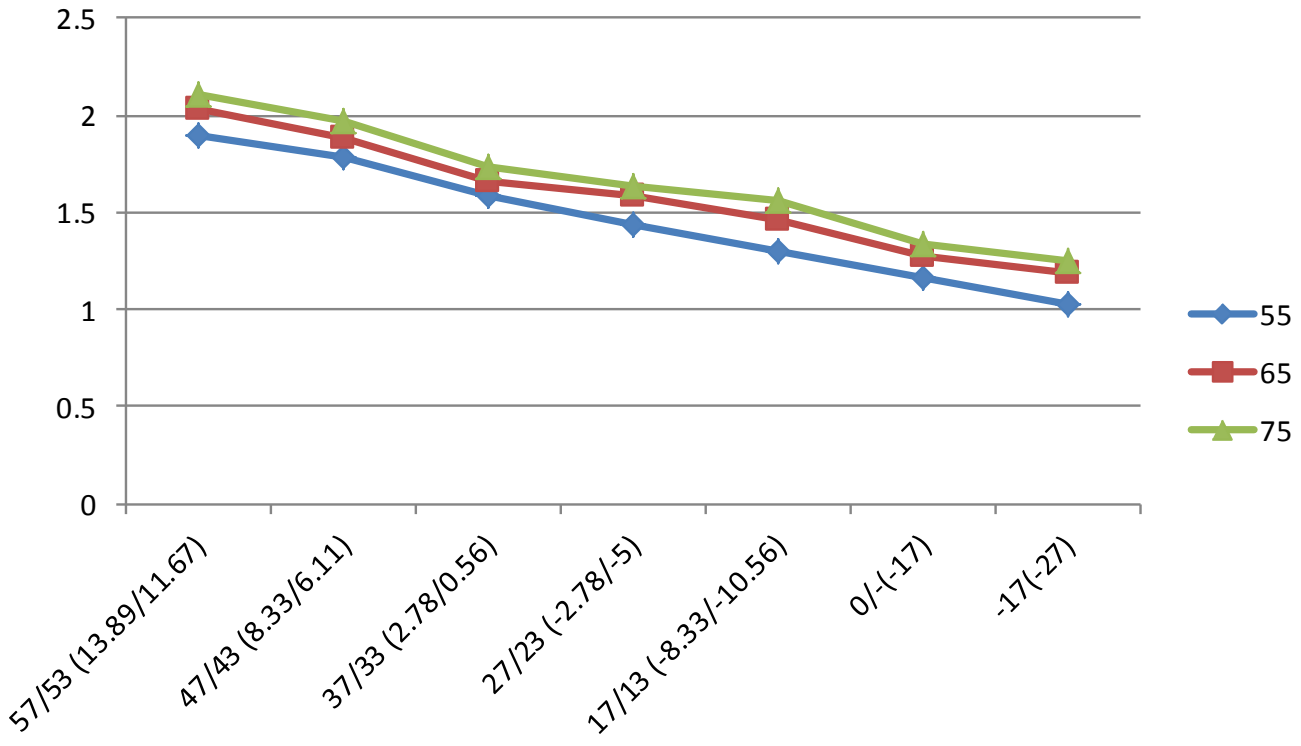

Cooling chart(R32):

°F(°C)	ODU(DB) / IDU(DB/WB)	0(-17)	5(-15)	15 (-9.44)	45 (7.22)	75 (23.89)	85 (29.44)	95 (35)	105 (40.56)	115 (46.11)	120 (48.89)
BAR	70/59 (21.11/15)	6.5	6.6	7.4	8.2	8.4	8.0	8.3	8.8	10.3	10.8
	75/63 (23.89/17.22)	6.8	6.9	8.1	8.8	8.8	8.5	8.9	9.3	10.9	11.4
	80/67 (26.67/19.44)	7.2	7.3	8.7	9.7	9.5	9.1	9.3	9.8	11.4	12.1
	90/73 (32.22/22.78)	7.9	8.0	9.8	10.7	10.5	9.7	10.2	10.8	12.6	13.3
PSI	70/59 (21.11/15)	95	96	108	118	121	115	119	128	150	157
	75/63 (23.89/17.22)	99	101	117	128	126	122	129	135	158	165
	80/67 (26.67/19.44)	105	106	125	141	138	132	135	143	165	176
	90/73 (32.22/22.78)	114	115	142	155	152	141	148	157	184	193
MPa	70/59 (21.11/15)	0.65	0.66	0.74	0.82	0.84	0.80	0.83	0.88	1.03	1.08
	75/63 (23.89/17.22)	0.68	0.69	0.81	0.88	0.88	0.85	0.89	0.93	1.09	1.14
	80/67 (26.67/19.44)	0.72	0.73	0.87	0.97	0.95	0.91	0.93	0.98	1.14	1.21
	90/73 (32.22/22.78)	0.79	0.80	0.98	1.07	1.05	0.97	1.02	1.08	1.26	1.33

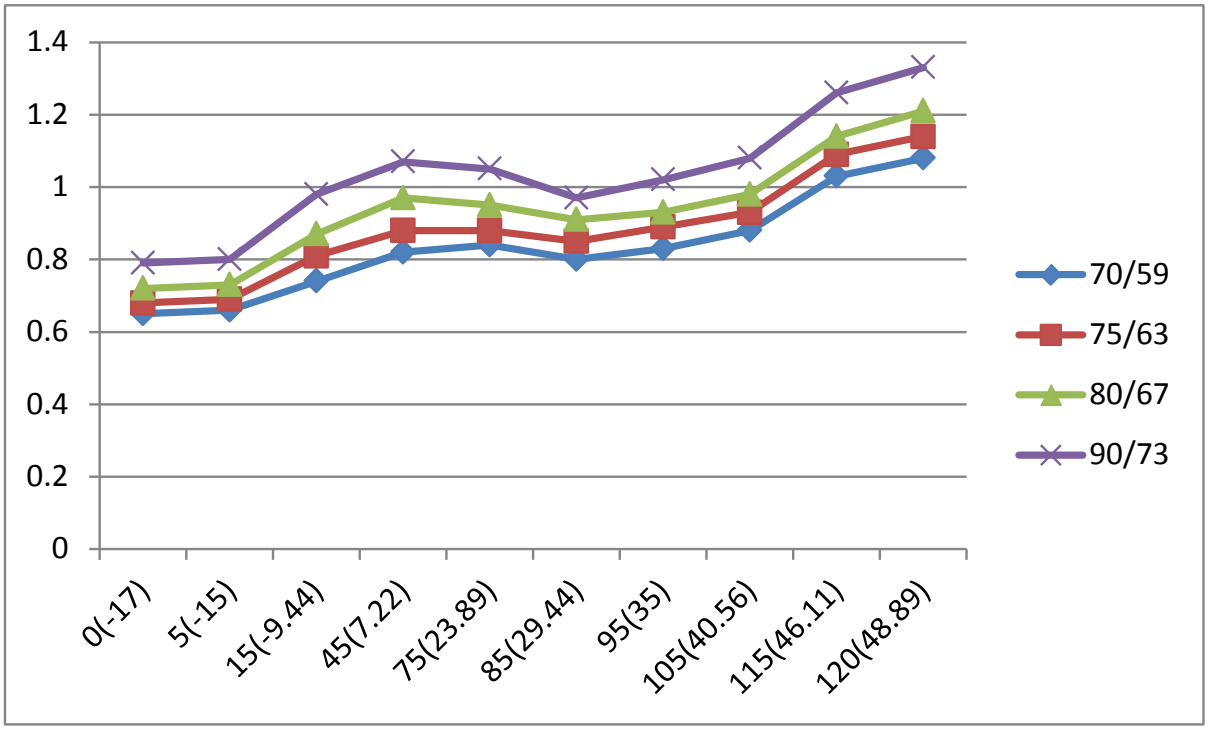

Heating chart(R32):

°F(°C)	QDU(DB/WB) / IDU(DB)	57/53 (13.89/11.67)	47/43 (8.33/6.11)	37/33 (2.78/0.56)	27/23 (-2.78/-5)	17/13 (-8.33/-10.56)	0/-2 (-17/-19)	-17/-18 (-27/-28)
BAR	55(12.78)	30.9	29.1	25.8	23.3	21.2	18.9	16.8
	65(18.33)	33.2	30.6	27.1	25.9	23.8	20.9	19.4
	75(23.89)	34.5	32.1	28.4	26.8	25.4	21.9	20.4
PSI	55(12.78)	448	421	374	337	308	273	244
	65(18.33)	480	444	394	375	346	303	282
	75(23.89)	499	466	411	389	369	318	296
MPa	55(12.78)	3.09	2.91	2.58	2.33	2.12	1.89	1.68
	65(18.33)	3.32	3.06	2.71	2.59	2.38	2.09	1.94
	75(23.89)	3.45	3.21	2.84	2.68	2.54	2.19	2.04

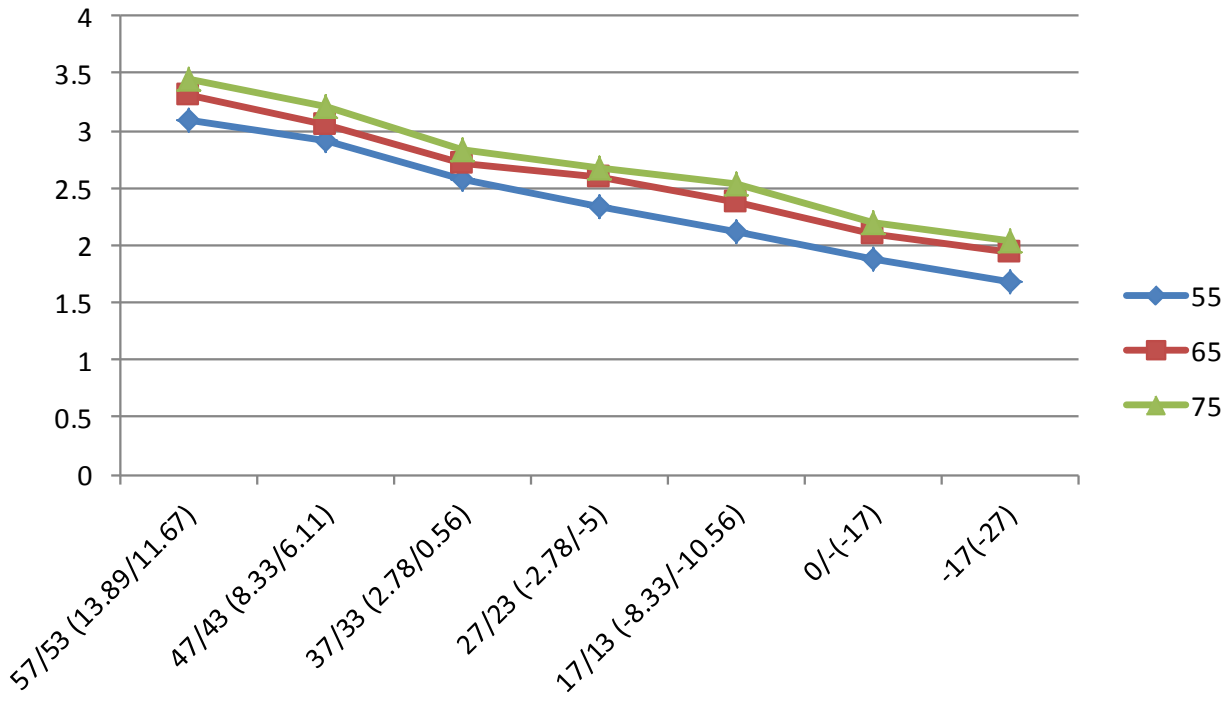

System Pressure Table-R22

Pressure			Temperature		Pressure			Temperature	
Kpa	bar	PSI	°C	°F	Kpa	bar	PSI	°C	°F
100	1	14.5	-41.091	-41.964	1600	16	232	41.748	107.146
150	1.5	21.75	-32.077	-25.739	1650	16.5	239.25	43.029	109.452
200	2	29	-25.177	-13.319	1700	17	246.5	44.281	111.706
250	2.5	36.25	-19.508	-3.114	1750	17.5	253.75	45.506	113.911
300	3	43.5	-14.654	5.623	1800	18	261	46.706	116.071
350	3.5	50.75	-10.384	13.309	1850	18.5	268.25	47.882	118.188
400	4	58	-6.556	20.199	1900	19	275.5	49.034	120.261
450	4.5	65.25	-3.075	26.464	1950	19.5	282.75	50.164	122.295
500	5	72.5	0.124	32.223	2000	20	290	51.273	124.291
550	5.5	79.75	3.091	37.563	2050	20.5	297.25	52.361	126.250
600	6	87	5.861	42.550	2100	21	304.5	53.43	128.174
650	6.5	94.25	8.464	47.234	2150	21.5	311.75	54.48	130.064
700	7	101.5	10.92	51.656	2200	22	319	55.512	131.922
750	7.5	108.75	13.249	55.848	2250	22.5	326.25	56.527	133.749
800	8	116	15.465	59.837	2300	23	333.5	57.526	135.547
850	8.5	123.25	17.58	63.644	2350	23.5	340.75	58.508	137.314
900	9	130.5	19.604	67.287	2400	24	348	59.475	139.055
950	9.5	137.75	21.547	70.785	2450	24.5	355.25	60.427	140.769
1000	10	145	23.415	74.147	2500	25	362.5	61.364	142.455
1050	10.5	152.25	25.216	77.389	2550	25.5	369.75	62.288	144.118
1100	11	159.5	26.953	80.515	2600	26	377	63.198	145.756
1150	11.5	166.75	28.634	83.541	2650	26.5	384.25	64.095	147.371
1200	12	174	30.261	86.470	2700	27	391.5	64.98	148.964
1250	12.5	181.25	31.839	89.310	2750	27.5	398.75	65.852	150.534
1300	13	188.5	33.371	92.068	2800	28	406	66.712	152.082
1350	13.5	195.75	34.86	94.748	2850	28.5	413.25	67.561	153.610
1400	14	203	36.308	97.354	2900	29	420.5	68.399	155.118
1450	14.5	210.25	37.719	99.894	2950	29.5	427.75	69.226	156.607
1500	15	217.5	39.095	102.371	3000	30	435	70.042	158.076
1550	15.5	224.75	40.437	104.787					

System Pressure Table-R410A

Pressure			Temperature		Pressure			Temperature	
Kpa	bar	PSI	°C	°F	Kpa	bar	PSI	°C	°F
100	1	14.5	-51.623	-60.921	2350	23.5	340.75	38.817	101.871
150	1.5	21.75	-43.327	-45.989	2400	24	348	39.68	103.424
200	2	29	-36.992	-34.586	2450	24.5	355.25	40.531	104.956
250	2.5	36.25	-31.795	-25.231	2500	25	362.5	41.368	106.462
300	3	43.5	-27.351	-17.232	2550	25.5	369.75	42.192	107.946
350	3.5	50.75	-23.448	-10.206	2600	26	377	43.004	109.407
400	4	58	-19.953	-3.915	2650	26.5	384.25	43.804	110.847
450	4.5	65.25	-16.779	1.798	2700	27	391.5	44.592	112.266
500	5	72.5	-13.863	7.047	2750	27.5	398.75	45.37	113.666
550	5.5	79.75	-11.162	11.908	2800	28	406	46.136	115.045
600	6	87	-8.643	16.444	2850	28.5	413.25	46.892	116.406
650	6.5	94.25	-6.277	20.701	2900	29	420.5	47.638	117.748
700	7	101.5	-4.046	24.716	2950	29.5	427.75	48.374	119.073
750	7.5	108.75	-1.933	28.521	3000	30	435	49.101	120.382
800	8	116	0.076	32.137	3050	30.5	442.25	49.818	121.672
850	8.5	123.25	1.993	35.587	3100	31	449.5	50.525	122.945
900	9	130.5	3.826	38.888	3150	31.5	456.75	51.224	124.203
950	9.5	137.75	5.584	42.052	3200	32	464	51.914	125.445
1000	10	145	7.274	45.093	3250	32.5	471.25	52.596	126.673
1050	10.5	152.25	8.901	48.022	3300	33	478.5	53.27	127.886
1100	11	159.5	10.471	50.848	3350	33.5	485.75	53.935	129.083
1150	11.5	166.75	11.988	53.578	3400	34	493	54.593	130.267
1200	12	174	13.457	56.223	3450	34.5	500.25	55.243	131.437
1250	12.5	181.25	14.879	58.782	3500	35	507.5	55.885	132.593
1300	13	188.5	16.26	61.268	3550	35.5	514.75	56.52	133.736
1350	13.5	195.75	17.602	63.684	3600	36	522	57.148	134.866
1400	14	203	18.906	66.031	3650	36.5	529.25	57.769	135.984
1450	14.5	210.25	20.176	68.317	3700	37	536.5	58.383	137.089
1500	15	217.5	21.414	70.545	3750	37.5	543.75	58.99	138.182
1550	15.5	224.75	22.621	72.718	3800	38	551	59.591	139.264
1600	16	232	23.799	74.838	3850	38.5	558.25	60.185	140.333
1650	16.5	239.25	24.949	76.908	3900	39	565.5	60.773	141.391
1700	17	246.5	26.074	78.933	3950	39.5	572.75	61.355	142.439
1750	17.5	253.75	27.174	80.913	4000	40	580	61.93	143.474
1800	18	261	28.251	82.852	4050	40.5	587.25	62.499	144.498
1850	18.5	268.25	29.305	84.749	4100	41	594.5	63.063	145.513
1900	19	275.5	30.338	86.608	4150	41.5	601.75	63.62	146.516
1950	19.5	282.75	31.351	88.432	4200	42	609	64.172	147.510
2000	20	290	32.344	90.219	4250	42.5	616.25	64.719	148.494
2050	20.5	297.25	33.319	91.974	4300	43	623.5	65.259	149.466
2100	21	304.5	34.276	93.697	4350	43.5	630.75	65.795	150.431
2150	21.5	311.75	35.215	95.387	4400	44	638	66.324	151.383
2200	22	319	36.139	97.050	4450	44.5	645.25	66.849	152.328
2250	22.5	326.25	37.047	98.685	4500	45	652.5	67.368	153.262
2300	23	333.5	37.939	100.290					

System Pressure Table-R32

Pressure			Temperature		Pressure			Temperature	
Kpa	bar	PSI	°C	°F	Kpa	bar	PSI	°C	°F
100	1	14.5	-51.909	-61.436	1850	18.5	268.25	28.425	83.165
150	1.5	21.75	-43.635	-46.543	1900	19	275.5	29.447	85.005
200	2	29	-37.323	-35.181	1950	19.5	282.75	30.448	86.806
250	2.5	36.25	-32.15	-25.87	2000	20	290	31.431	88.576
300	3	43.5	-27.731	-17.916	2050	20.5	297.25	32.395	90.311
350	3.5	50.75	-23.85	-10.93	2100	21	304.5	33.341	92.014
400	4	58	-20.378	-4.680	2150	21.5	311.75	34.271	93.688
450	4.5	65.25	-17.225	0.995	2200	22	319	35.184	95.331
500	5	72.5	-14.331	6.204	2250	22.5	326.25	36.082	96.948
550	5.5	79.75	-11.65	11.03	2300	23	333.5	36.965	98.537
600	6	87	-9.150	15.529	2350	23.5	340.75	37.834	100.101
650	6.5	94.25	-6.805	19.752	2400	24	348	38.688	101.638
700	7	101.5	-4.593	23.734	2450	24.5	355.25	39.529	103.152
750	7.5	108.75	-2.498	27.505	2500	25	362.5	40.358	104.644
800	8	116	-0.506	31.089	2550	25.5	369.75	41.173	106.111
850	8.5	123.25	1.393	34.507	2600	26	377	41.977	107.559
900	9	130.5	3.209	37.777	2650	26.5	384.25	42.769	108.984
950	9.5	137.75	4.951	40.911	2700	27	391.5	43.55	110.39
1000	10	145	6.624	43.923	2750	27.5	398.75	44.32	111.776
1050	10.5	152.25	8.235	46.823	2800	28	406	45.079	113.142
1100	11	159.5	9.790	49.621	2850	28.5	413.25	45.828	114.490
1150	11.5	166.75	11.291	52.324	2900	29	420.5	46.567	115.821
1200	12	174	12.745	54.941	2950	29.5	427.75	47.296	117.133
1250	12.5	181.25	14.153	57.475	3000	30	435	48.015	118.427
1300	13	188.5	15.52	59.936	3050	30.5	442.25	48.726	119.707
1350	13.5	195.75	16.847	62.325	3100	31	449.5	49.428	120.970
1400	14	203	18.138	64.648	3150	31.5	456.75	50.121	122.218
1450	14.5	210.25	19.395	66.911	3200	32	464	50.806	123.451
1500	15	217.5	20.619	69.114	3250	32.5	471.25	51.482	124.668
1550	15.5	224.75	21.813	71.263	3300	33	478.5	52.15	125.87
1600	16	232	22.978	73.360	3350	33.5	485.75	52.811	127.060
1650	16.5	239.25	24.116	75.409	3400	34	493	53.464	128.235
1700	17	246.5	25.229	77.412	3450	34.5	500.25	54.11	129.398
1750	17.5	253.75	26.317	79.371	3500	35	507.5	54.748	130.546
1800	18	261	27.382	81.288					

Airwell

Just feel well

WARNING :
The design and specifications are subject to change without prior notice for product improvement. Consult with the sales agency or manufacturer for details.

ATTENTION :
Le design et les données techniques sont donnés à titre indicatif et peuvent être modifiés sans préavis.

AIRWELL RESIDENTIAL SAS
10,Rue du Fort de Saint Cyr,
78180 Montigny le Bretonneux - France
www.airwell.com

21.AW.LCAC-INV.035-175.R32.SM.EN.10.18.Rev01